Digitized by the Internet Archive
in 2025

https://archive.org/details/steamturbines0000jame

STEAM TURBINES

WORKS OF J. A. MOYER

PUBLISHED BY

JOHN WILEY & SONS, Inc.

Engineering Descriptive Geometry

A text-book for students of engineering, applying the principles of descriptive geometry to the problems of practical drafting **Fourth** Edition. 204 pages, 6 by 9, 329 figures. Cloth.

Steam Turbines

A practical and theoretical treatise for engineers and students, including a discussion of the mercury and gas turbines. Sixth Edition, Revised and Enlarged. 567 pages, 6 by 9, 231 figures. Cloth.

Marine Steam Turbines

Instruction material for home study. In 24 assignments, each bound separately. Paper.

Practical Steam Engineering

Instruction material for home study. In 20 assignments, each bound separately. Paper.

BY J. A. MOYER AND C. H. SAMPSON

Practical Trade Mathematics

Written to fill the need for a practical text on mathematics suitable for students specializing in the various trades. The problems are in two groups, first those for electricians, and second, those for the other trades. By J. A. Moyer and Charles H. Sampson, Headmaster of Huntington School for Boys. 172 pages, 5 by 7¼, 155 figures. Cloth.

BY J. A. MOYER, J. P. CALDERWOOD AND A. A. POTTER

Elements of Engineering Thermodynamics

An extension of the briefer work on "Engineering Thermodynamics," with additions and changes to meet the needs of technical colleges and students desiring supplementary material. By J. A. Moyer, James P. Calderwood, Professor and Head of Department of Mechanical Engineering, Kansas State Agricultural College, and Andrey A. Potter, Dean of the Schools of Engineering, **Purdue** University. **Third** Edition, Revised. 224 pages, 6 by 9 75 figures. Cloth.

BY J. A. MOYER AND W. H. TIMBIE

Practical Electricity for Electricians, Electrical Engineers and Others

Instruction material for home study, including Timbie's "Essentials of Electricity." By J. A. Moyer and W. H. Timbie, Professor of Electrical Engineering and Industrial Practice, Massachusetts Institute of Technology. In 7 pamphlets, each bound separately. Paper.

STEAM TURBINES

A PRACTICAL AND THEORETICAL TREATISE FOR ENGINEERS AND STUDENTS

INCLUDING A DISCUSSION OF MERCURY AND GAS TURBINES

BY

JAMES AMBROSE MOYER, S.B., A.M.

Member of the American Society of Mechanical Engineers, American Institute of Electrical Engineers, Mitglied des Vereines deutscher Ingenieure, Membre Titulaire Association Internationale du Froid, Member of the Franklin Institute, etc.

Director of the Massachusetts Department of University Extension, formerly Professor of Mechanical Engineering in University of Michigan and Pennsylvania State College, Engineer Westinghouse, Church, Kerr & Co., and Steam Turbine Department, General Electric Company

SIXTH EDITION, REVISED AND ENLARGED

NEW YORK

JOHN WILEY & SONS, INC.,

LONDON: CHAPMAN & HALL, LIMITED

1929

COPYRIGHT, 1908, 1914, 1917, 1919, 1924, 1929
BY
JAMES AMBROSE MOYER

Printed in U. S. A.

Printing
F. H. GILSON CO.
BOSTON

Composition and Plates
TECHNICAL COMPOSITION CO.
CAMBRIDGE

Binding
STANHOPE BINDERY
BOSTON

PREFACE TO SIXTH EDITION

In the preparation of this edition, special attention has been given to the calculations for the designing of steam turbines. New sections have been added with reference to the enlarged field of application of bleeder or extraction turbines, recent data on the variation of steam consumption with the age of turbines, various designs of shaft and diaphragm packings, and new features in the design of the casing and multiple exhaust ends of large turbines for high-pressure conditions. Steam turbine-generator units to generate 165,000 kilowatts as here described are now a reality, with an economy of only a little more than ten pounds of steam per kilowatt-hour. Twenty years ago the best American power plants could, under the most favorable conditions, do no better than develop a kilowatt-hour from three pounds of coal. It is easily possible now to produce the same power from half the amount of coal. Some space is also given to the re-entry of the steam accumulator into power plant services.

Calculations for the designs of a reaction steam turbine of the Parsons type are included in an appendix. Students and designers have found such illustrative examples of great help in following out a complete design for specified conditions.

In the preparation of the present edition I have received valuable assistance from Mr. Frank V. Smith, General Electric Company, Schenectady; Mr. George Taylor, Westinghouse Electric & Manufacturing Company, Boston; Mr. A. E. Seelig, President, L. J. Wing Manufacturing Company, New York; Professor Ellsworth Gray, Massachusetts Institute of Technology; Professor F. T. Morse, Louisiana Polytechnic Institute; Professor Michel Daniloff, Purdue University; and Mr. John F. Wostrel, Massachusetts Department of University Extension.

THE AUTHOR.

State House, Boston
November, 1928.

PREFACE TO FIFTH EDITION

In many steam power plants hundreds of pounds of steam exhausted from the auxiliaries at atmospheric pressure in excess of that required in the heaters for heating the feed is lost through the exhaust-heads. Modern methods of turbine application would save and utilize this steam for power. In the most modern practice, therefore, the greatest skill of the engineer is called upon more in connection with the methods of applying the commercial types of turbines already developed rather than in the actual designing of new types of machines. In steam engine designing there have been always unlimited possibilities; in modern steam turbine designing these are few.

In the revisions for the fourth and fifth editions, I am particularly indebted to Professor J. E. Emswiler, University of Michigan; Professor T. H. Taft, Massachusetts Institute of Technology; Professor R. L. Daugherty, California Institute of Technology; Professor A. G. Christie, Johns Hopkins University; Professor J. G. Callan, University of Wisconsin; Professor E. A. Fessenden, Rensselaer Polytechnic Institute; Professor A. J. Wood, Pennsylvania State College; and Mr. M. Nusim, Ingersoll-Rand Company.

Acknowledgment should be made of important criticisms and suggestions received from Professor H. N. Davis, Harvard University; Professor J. B. Ludy, Purdue University; Professor W. E. Brooks, University of Minnesota; Professor L. C. Loewenstein, New York City; Mr. R. T. Kent, New York City; Professor J. J. Eames, Massachusetts Institute of Technology; Professor J. P. Calderwood, Kansas State College; Professor R. U. Fittz, Tufts College; and Mr. J. F. Wostrel, Massachusetts Department of University Extension.

Special mention should be made of the assistance, especially in the revision of Chapter XV, of Mr. Earl Bartholomew, instructor in Harvard University.

Papers prepared by Messrs. H. T. Herr, Vice President and General Manager of the Westinghouse Electric and Manufacturing Company; W. L. R. Emmet and Frank V. Smith, Consulting Engineers of the General Electric Company; and H. G. Stott, Superintendent of Motive Power, Interborough Rapid Transit Company of New York, have been freely consulted.

In these revisions, additions have been made to the exercises for classes in the Appendix. The author will be glad to answer any inquiries from instructors in regard to these exercises.

THE AUTHOR.

State House, Boston, Mass.
July, 1924

PREFACE TO FIRST EDITION

THE object of this book is to give in a small volume what I believe, as the result of years of practical experience, engineers and students of engineering want to know about steam turbines. It is intended that it shall be a manual for the practical engineer who is designing, operating, or manufacturing steam turbines rather than a compilation of manufacturers' catalogs combined with a digest of standard books on thermodynamics and mechanics.

In a general way the author has tried to explain briefly and directly some of the more important problems about which the qualified steam engineer must have some knowledge. When this book was first planned it was intended primarily for the use of the author's assistants in the experimental and testing departments of one of the large manufacturing companies, but later it seemed that it might be useful in a larger field.

Most of the graduates of our American technical schools are entirely " at sea " with the simplest heat calculations, and one of the reasons for this deficiency is that most of the books on steam engines — and especially those on the steam turbine — are more devoted to giving a large quantity of facts than to fulfilling a useful purpose. Practical engineers who have had to deal with large numbers of men with an engineering training agree most candidly with Dr. Steinmetz when he says in substance that it seems to cause no concern in some of our large technical schools that the graduates are sent out loaded with a mass of half-understood and undigested subjects, while they are deficient both in the understanding of the fundamental principles and in the ability to think. If this volume can serve the purpose of encouraging students to *think* it will have accomplished one of its principal purposes, not losing sight of the fact that the book is intended primarily to show how to do things.

Nearly all the proof-reading has been done by Professor John F.

Pelly of Philadelphia. Because of Professor Pelly's thoroughly practical as well as theoretical knowledge of the subject matter, his conscientious and painstaking work is very greatly appreciated.

I take this opportunity to thank Professor Ira N. Hollis and Professor F. Lowell Kennedy of Cambridge for the criticisms and suggestions which I received from them when the manuscript of this book was preparing. I am also greatly indebted to Mr. Walter C. Kerr, president, and Mr. Sidney E. Junkins, vice-president of Westinghouse, Church, Kerr & Company, for their encouragement and for making it possible to finish the book at this time.

For placing at my disposal a great deal of information regarding the latest results in steam turbine engineering, which is usually very difficult to obtain, I am particularly indebted to Mr. Richard H. Rice of Lynn, and Mr. J. R. Bibbins of Pittsburg.

I wish to thank Professor Arthur M. Greene of Troy and Mr. Albert Stritmatter of Cincinnati for suggestions relating to the subject matter. For various services in the preparation of this book, I should mention also Messrs. Francis Hodgkinson and Harold P. Childs of the Westinghouse Machine Company; C. P. Crissey, S. A. Moss, and W. E. Culbertson of the General Electric Company; and C. P. Chasteney of the De Laval Steam Turbine Company.

THE AUTHOR.

New York City,
September, 1908.

CONTENTS

CHAPTER		PAGE
I.	Introduction	1
II.	The Elementary Theory of Heat	10
III.	Nozzle Design	36
IV.	Steam Turbine Types and Blade Design	62
V.	Mechanical Losses in Turbines	175
VI.	Method for Correcting Steam Turbine Tests	186
VII.	Commercial Types of Turbines	200
	De Laval, Parsons, Westinghouse, Allis-Chalmers, Curtis, Rateau, Wilkinson, Zoelly, Sturtevant, Riedler-Stumpf, Kerr, Terry, Dake, etc.	
VIII.	Governing Steam Turbines	302
IX.	Low-Pressure (exhaust) Turbines	339
X.	Mixed-Pressure Turbines	365
XI.	Bleeder, Regenerative or Extraction Turbines	369
XII.	Marine Turbines	379
XIII.	Tests of Turbines	389
XIV.	Steam Turbine Economics	404
XV.	Stresses in Rings, Drums, and Disks	443
	Design of Turbine Wheels — Critical Speeds of Loaded Shafts.	
XVI.	Mercury Vapor Turbines	495
XVII.	Gas Turbines	506
XVIII.	Electric Generators for Turbines	523
	Direct-current Generators — Alternating-current Generators.	
	Appendix A — Practical Exercises	528
	Appendix B — Calculations for Design of Reaction Turbine	544
	Index	549

THE STEAM TURBINE

CHAPTER I.

INTRODUCTION

THE steam turbine is the most modern as well as the most ancient steam motor. Recently its development has gone by leaps and bounds; and, above all, in its applications it is gaining ground daily. It has become the most important prime mover.

During recent years results have been secured with steam turbines that only a short time ago were considered practically unattainable. Primarily their great success lies in their adaptability to operation with conditions of vacuum,* superheat, and pressure much beyond the limits of steam engine practice. As regards steam turbines, the limits as to these conditions rest with what is commercially practicable to get from the vacuum apparatus and boilers. Today in the economical use of steam they are unrivaled; and, because of improved manufacturing methods, first cost is no longer a deciding factor favoring reciprocating engines.

Compared with reciprocating steam and gas engines, steam turbines require much smaller and cheaper foundations, occupy less floor space, require fewer attendants, and because no lubrication is required for any parts in contact with the steam, the condensation becomes directly available for feed water. The highest superheats can be employed without affecting the choice of lubricants, and the cost of oil for lubrication is very low.

A steam turbine of the simplest type is essentially a wheel similar to an ordinary water wheel, which is moved around by a steam jet impinging on its blades. Steam is directed against the turbine wheel by nozzles or similar passages delivering the

* The most profitable vacuum superheat and pressure for given conditions are discussed in Chapter XIV.

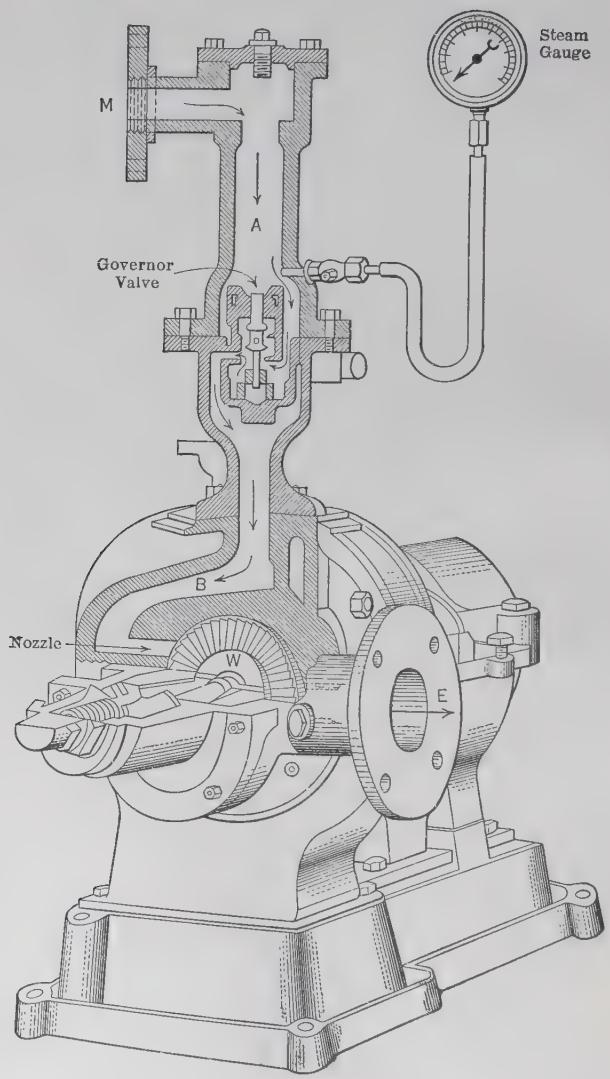

FIG. 1. A Small Modern Steam Turbine with Part of the Casing Removed.

steam at mathematically exact angles, calculated to make the steam strike the blades of the wheel most advantageously.

Fig. 1 is an illustration of a modern steam turbine with a part of the casing removed to show the construction. The turbine

wheel **W** is shown here with numerous blades on its circumference. The steam comes to the turbine from the boilers through a suitable steam main connected to the top of the turbine at **M** and passes down through the pipe **A** to the steam-chest **B.** From this steam-

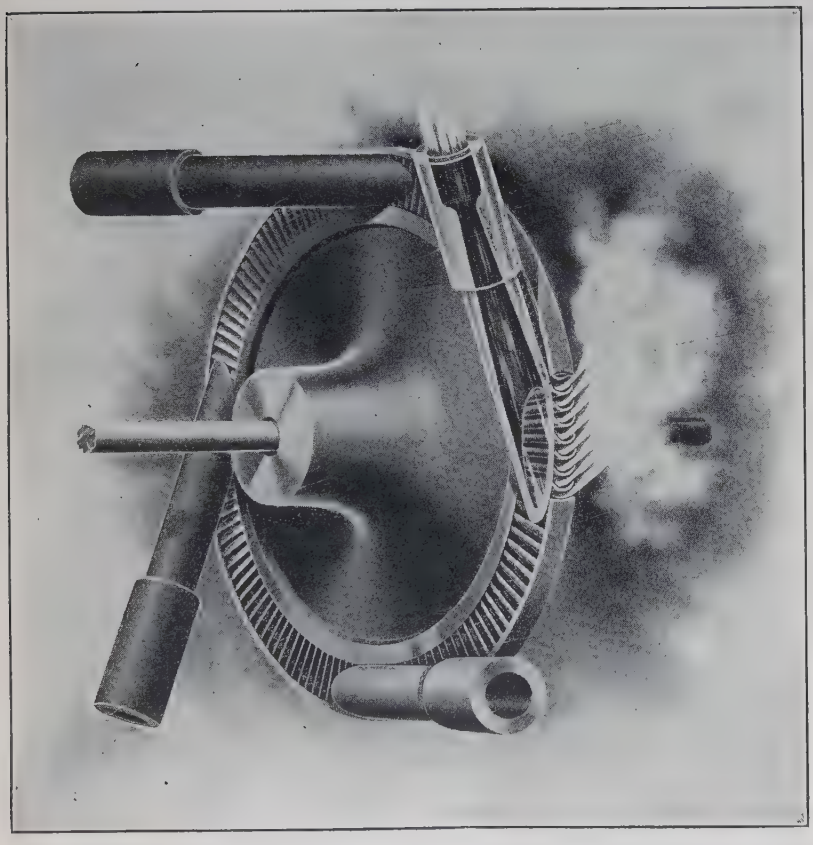

FIG. 2. The Turbine Wheel and Nozzles.

chest it is guided through one or more nozzles, from which it escapes at a high velocity to impinge on the blades on the circumference of the turbine wheel, which is thus made to rotate, and performs work by moving machinery connected to the shaft. Nozzles from which the steam is discharged are located around the periphery of the wheel as shown in **Fig. 2** with their enlarged

ends, technically called **mouths,** very close to the blades.* Steam after passing through the blades enters the exhaust pipe at **E** (Fig. 1) and is discharged into the atmosphere or into a condenser, depending on whether the operation is non-condensing or condensing.

Preliminary to the study of the modern commercial types of steam turbines it is desirable to state briefly some of the most important stages through which this very ancient form of steam motor has passed in its development.

Early History. The earliest notices of heat engines of any kind are found in a book by **Hero** of Alexandria, which was probably written in the second century before Christ. In this book of mechanical contrivances a **steam reaction wheel** is mentioned. This first steam turbine is shown in **Fig. 3.** It is described as consisting of a hollow spherical vessel pivoted on a central axis and supplied with steam through the support **M** and one of the pivots from a boiler, **B,** beneath. Steam escaped from the vessel through bent pipes or nozzles **N, N,** facing tangentially in opposite directions. The spherical vessel was revolved by the reaction due to the escaping steam, just as a "Barker's mill" is moved by the water escaping from its arms. Any fluid escaping under pressure from a vessel which is free to move causes a "reaction" tending to displace the vessel in the opposite direction from the flow of the fluid. This reaction, although imperfectly understood by Hero, was perfectly applied in his steam turbine which was used to open the doors of temples. Only a few years ago a model of Hero's engine was constructed by a celebrated English engineer,† with, of course,

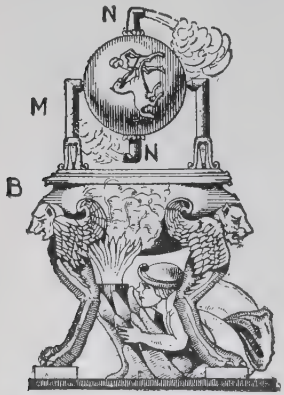

FIG. 3. Hero's Turbine.

* In this figure one of the nozzles is represented as if transparent to show its shape on the inside, and a part of the steel band around the blades is cut away to show the shape of the blades or vanes, as well as to illustrate the passage of steam from the nozzle into and through the blades.

† See page 8.

all the advantages of modern machine tools and appliances, with the result that an engine was produced which, in economy, compared well with our elaborate and complicated modern engines.

In 1577 a German mechanician, it is said, used a turbine similar to Hero's to rotate reaming and burnishing tools, but from the time of Hero down to the seventeenth century there is **no record of progress** in the development of steam heat engines. In 1629 **Branca,** an Italian architect, designed a steam turbine (**Fig. 4**) resembling a water wheel, which was driven by the impulse from a jet of steam directed by means of a nozzle upon suitable vanes attached to the wheel. Branca's turbine engine, however, was not successful; and until the end of the nineteenth century, although in the interval many steam turbines and other rotary engines were patented, the piston or reciprocating steam engine, under the leadership of Watt, had, commercially, an unrestricted field and remarkable results were accomplished.

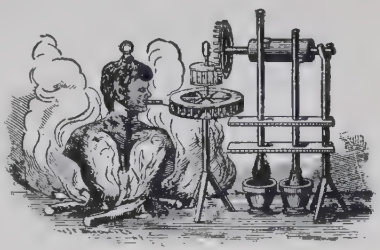

FIG. 4. Branca's Turbine.

It is interesting to observe that the modern type of impulse turbine with a single row of blades like the one illustrated in Fig. 1 is practically the same, except for details, as the historic Branca's wheel. The principal difference is that Branca's wheel was not enclosed in a casing. Essential parts — the nozzle, the blades, the wheel, and the shaft — were practically the same as in some modern machines. Probably if Branca had understood the laws of the expansion of steam as we do to-day, he could have made a successful prime mover of his turbine. Those who came after him were aided not only by a superior knowledge but also by the opportunities for scientific investigation and the skill of our present-day workshops.

De Laval Type. Dr. Gustaf **De Laval,** a Swedish scientist, was

a pioneer in the modern commercial development of steam turbines. In 1882 he constructed his first steam turbine, which was similar in principle to **Hero's reaction engine.** De Laval's first turbine was designed primarily for driving his milk and cream separators, for which there was then a large sale. For other purposes, however, there was no general application, because at the very high speeds for which his turbine was designed, it was difficult to utilize the power; and besides, the steam consumption made it practically prohibitive.

Later De Laval turned his attention to the development of **Branca's** steam turbine, and was remarkably successful. After much experimenting, he developed an impulse turbine which is still one of the standard makes. (See Figs. 82 to 86.) This great engineer, after investigating the possibilities of both Hero's and Branca's types and having decided to adopt the latter, began then some strikingly original inventive work, which, in many respects, led the way for the accomplishments of to-day.

It should be stated, however, in this connection, that no engineer thinks of belittling De Laval's work because his investigations were mostly in the line of improvements to existing types. Unquestionably he must have the credit for producing the first commercially successful steam turbine. Many of the features of his original designs have actually contributed in no small measure to our knowledge of machine design and thermodynamics, and have become fundamental principles underlying many of the most important modern steam turbine developments.*

Parsons Type. With the early work of De Laval, however, the development of steam turbines designed to operate by the **reaction** principle of Hero's engine was not given up. Almost contemporaneously with De Laval, C. A. Parsons in England began the development of the well-known type which to-day bears his name, and which has made possible the brilliant records of turbine ocean steamers. In April, 1884, this great inventor took

* The most important feature introduced by De Laval is that of the diverging nozzle (British Patent No. 7143 of 1889), the principle of which has influenced the development of practically all types of steam turbines.

out his first patents on steam turbines. The practicability of the steam turbine he then proposed is a striking feature of even his first patents. His specifications showed, above all, that a great deal of time and thought had been devoted to constructive details. Methods for reducing vibration, preventing leakage of steam, and providing for efficient lubrication contributed very largely to his success. Many of the details of this early turbine are now obsolete, so that only a very short description will be given here. A section drawing of Parsons' first turbine is shown in **Fig. 5.** A

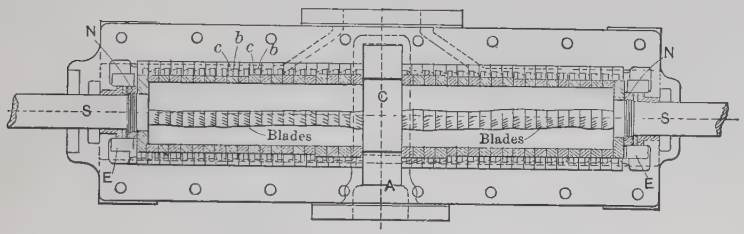

FIG. 5. Early Parsons Steam Turbine.

large central collar, **C,** is attached to the main shaft, **S,** which runs the length of the turbine. At the ends of the casing where the shaft passes through it the cross-section is reduced. The main shaft, **S,** supports a large number of rings which are held in place between the collar, **C,** and the nuts, **N,** which are screwed on the reduced section of the shaft at the ends. These rings, around their circumferences, support those turbine blades (**b, b**) which move with the shaft. There are, however, alternating with them, other rows of blades (**c, c**) attached to the inside of the turbine casing. Technically the blades **b, b** are called **moving blades,** and **c, c** are called fixed or **stationary blades.** Steam is admitted to the turbine blades through the annular chamber, **A,** encircling the collar, **C,** and then it passes to the right and left through the alternate rows of stationary and moving blades to the exhaust passages **E, E** — one at each end of the turbine. The steam expands in the blades as in a nozzle, and the reaction of the steam moves the blades attached to the shaft, according to the same principles of reaction that Hero's turbine was rotated.

By the "double-flow" arrangement in this design by which the steam is passed from the center to the exhaust at both ends there can be very little axial thrust on the shaft. Any thrust that does occur, however, is balanced by the pressure of the exhaust steam in the chambers **E, E** at the ends of the casing. A slight movement of the shaft toward either end checks the flow of the exhaust steam and increases the back pressure at that end. This increased pressure then moves the shaft back to its normal position.

Usually it is not possible to balance the parts of a rotating mass to make its **center of gravity** coincide exactly with the **geometric center** about which it revolves. In any machine like a steam turbine, when these two centers do not coincide excessive vibrations of the shaft are produced which at certain speeds * are sufficient to break it. To overcome this difficulty, Parsons ingeniously allowed a little lateral play, or "elasticity," as he called

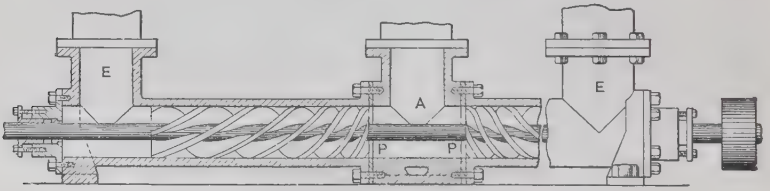

FIG. 6. Screw Type of Steam Turbine.

it, for the shaft by means of a series of rings of two different diameters, in principle very much the same as the construction of the main bearings of some Parsons turbines, so that it was permitted to move laterally a certain amount, say a hundredth of an inch, to allow the proper adjustment in passing from rest to the normal speed of running.

Among his early experiments Parsons also tried a **purely reaction steam turbine,** following almost exactly the published designs of Hero. This turbine, running with 100 pounds per

* This phenomenon occurs at very definite speeds, called "critical," for every rotating mass. Fuller discussion, with a method for calculating "critical" speeds, is given on page 486.

square inch steam pressure and 27 inches of vacuum, gave an output of 20 horsepower at 5,000 revolutions per minute. Steam consumption was only 40 pounds per **brake horsepower** per hour, which was indeed a remarkably good result for that time.

Screw Type. Inventors have worked on the development of a screw type like **Fig. 6.** Steam was admitted to this turbine through the chamber **A,** and passed through holes in the plates **P, P** into the helical grooves on the shaft. In these grooves the steam was expanded and then escaped to the exhaust pipes **E, E** at the two ends. Effective action of the steam was probably obtained only in the first part of the grooves; and after being deflected into a helical course, it rushed through to the exhaust without much additional effect in moving the shaft.

Recently a somewhat similar arrangement having two " screw wheels " meshing together not unlike spiral or helical gears has been successfully developed (see Fig. 157, page 298).

FIG. 6a. Bucket Wheel Turbine.

A distinctly different method for the utilization of the energy in steam in steam turbines is shown in **Fig. 6a.** The arrow shows the direction of flow of steam into the nozzle, from which it is discharged into pocket-like buckets cut into the rim of the wheel. Opposite the wheel buckets there are exactly similar buckets on the inside of the turbine casing, which are provided for the purpose of guiding the steam, as shown in the figure, from one wheel bucket to the next, around the circumference (see Fig. 153, page 295).

CHAPTER II.

THE ELEMENTARY THEORY OF HEAT.

NOTE. — This short chapter may well be omitted, in reading, by those who are familiar with the thermodynamics of heat engines and with the use of entropy diagrams. It is intended primarily for practical engineers, who will find it particularly valuable for reference purposes, as the subject matter is completely indexed.

TECHNICALLY the steam turbine must be regarded as a heat engine, that is, a machine in which heat is employed to do mechanical work. From the viewpoint of the practical man its function, the same as that of any other heat motor, is to secure as much work as possible from a given amount of steam, or, going a step farther back, from the combustion of a given amount of fuel. Heat theory is, therefore, of first importance.

Heat is a form of energy like electrical, chemical, mechanical, potential, and kinetic. No doubt exists about the equivalence of the different forms of energy and their close relation to each other. Each, at will, can be changed into any of the other forms.

The relative amount of heat in a body is observed, in common experience, by the sense of touch — whether the body is a solid, a liquid, or a gas. By such experience we have learned to recognize certain sensations as hot or cold; and then, with more accuracy, to speak of **degrees of temperature.** Now when a hot and a cold body are brought together their temperatures become equalized. The hotter body always loses heat. The colder body always gains heat.* This experience is the principal basis for all heat calculations.

When in the course of time it had been found that a more accurate method than that of the sense of touch was needed for heat determinations, methods utilizing the expansion of liquids

* This phenomenon is called the *second law of thermodynamics*, — that "heat energy always passes from a warm body to a cold body."

came to be generally employed. Many substances have a practically uniform rate of expansion between the limits of temperature an engineer has to deal with. A small column of mercury in a glass capillary tube is usually taken as a standard for temperature measurements.* The mercury in an accurate thermometer expands nearly $\frac{180}{492}$ of its original volume when heated from the freezing temperature of water (32° F.) to the boiling point (212° F.). The expansion between the freezing point and the boiling point of water has been called, arbitrarily, 180° F.

For theoretical heat calculations the zero of temperature is taken as 492° F. below the freezing temperature of water; or, 460° below the Fahrenheit zero. This very low temperature is called the **absolute zero,** and at this point there is theoretically no heat energy.

Temperatures measured from the absolute zero are called **absolute temperatures** and are indicated generally by **T,** to distinguish them from the ordinary Fahrenheit temperatures, **t,** as read on a thermometer scale.

Using these symbols, we have then in Fahrenheit degrees,

$$T = t + 460.$$

Absolute temperatures are convenient for heat calculations because "perfect" gases, at constant pressure, increase in volume in proportion to the increase in absolute temperature.

* The ordinary mercury thermometers can be used to measure temperatures to about 575° F. with accuracy. For higher temperatures the capillary tube over the mercury should be filled with nitrogen or carbonic acid gas under high pressure. Such thermometers can then be used for temperatures up to 1000° F.

If the mercury is not throughout its whole length at the same temperature as that being measured, a correction, k, given by the following formula must be added to the observed temperature, t, in Fahrenheit degrees:

$$k = .000{,}088\, D\,(t - t'),$$

where D is the length of the mercury column exposed, *measured in Fahrenheit degrees*, and t' is the temperature of the exposed part of the thermometer. When long thermometers are used in shallow wells in high-pressure steam pipes this correction is often 5° to 10° F. For experimental data and direct-reading correction curves, see Moyer's *Power Plant Testing*, 3d edition (McGraw-Hill Book Co.), pages 39–42.

Heat Units and Specific Heat. The amount of heat required to raise the temperature of one pound of water from 62° to 63° F. is taken arbitrarily as the standard English unit of heat, — commonly called the **British thermal unit** (**B.T.U.**).* The ratio of the amount of heat required to raise the temperature of a pound of water or steam one degree to the British thermal unit is called the **specific heat.**†

The specific heat of steam and of gases changes in value according to the conditions under which the heat is applied. If heat is added to a vapor or a gas held in a closed vessel, with no chance for expansion, no external work is done, and therefore practically all the heat added is used to increase the temperature. This is the condition in a boiler when **no steam is being drawn off.** In this case the specific heat is symbolized by C_v = **specific heat at constant volume.** If, on the other hand, the pressure is kept constant but the volume is allowed to change to permit expansion and the performing of external work, we say then, C_p = **specific heat at constant pressure.**

Heating at constant pressure is the condition that is most interesting to the engineer. When his engines are running the boilers are making steam at **constant pressure.** The heat energy absorbed by a pound of steam for raising only the temperature must be, obviously, approximately the same, regardless of the conditions of pressure and volume. Since for constant pressure conditions some external work is always done, requiring a larger amount of heat energy than for the case when the volume is constant, it follows that C_p is always greater than C_v.

We should add, further, that an engineer's calculations concerning energy transformations in steam turbines are almost

* In the C. G. S. (Centigrade-gram-second) system of units the kilogram-calorie (kg.-cal.) is used as the standard heat unit. 1 kg.-cal. = 3.97 or nearly 4 British thermal units (B.T.U.).

† The specific heat of water at 200° F. is 1.005, and of superheated steam an average value of .6 is often assumed in rough calculations for steam at the usual boiler pressures in power plant practice for superheats less than 150° F. Mean values of the specific heat of superheated steam are given by the curves in Fig. 12.

without exception for the condition of constant pressure, and, consequently, only values of C_p are generally useful. Most gases have practically constant values for their specific heats.

At temperatures near the boiling point, the heating of vapors, like steam, is influenced by molecular attraction, so that their specific heats are variables depending on conditions of temperature and pressure. The specific heat of superheated steam **decreases with increasing temperatures** to a **minimum value.** The values of specific heat **increase** slightly, on the other hand, **with an increase of pressure.***

Mechanical Equivalent of Heat. Heat and work are both forms of energy and are "equivalent," meaning that energy can be transformed into mechanical work, and that work, as a form of energy, can be changed back again into heat. The relation is expressed by

1 British thermal (heat) unit = 778 foot-pounds (work).

HEAT AND WORK.

Heat is a form of energy. Each of the various kinds of heat motors, such as the steam engine, the steam turbine, the gas engine, or the gas turbine, is a machine for obtaining mechanical work from heat energy.

In the general principles of operation the steam turbine and the reciprocating or "piston" steam engine are essentially similar machines. Both do work according to the same heat relations. The gas turbine is somewhat different. This new motor, which as yet has scarcely reached a practical stage of development, will be discussed in its proper place.

In a **reciprocating steam engine** working "expansively" the steam is admitted at boiler pressure until the point of cut-off; and during the remainder of the stroke the piston is pushed ahead, or **does work, by the expansion of the steam shut up in the cylinder.** In the **steam turbine** the heat process is analogous, except that

* Knoblauch and Jakob, *Zeit. Verein deutscher Ingenieure*, vol. LI, No. 1, and an article by the author in *Mechanical Engineer* (London), vol. XX, page 279.

the **flow of the steam, instead of being intermittent, is continuous.** Steam is continually **pushed into the nozzles,** or similar steam passages, and expanding, expends its internal energy in producing velocity. Vanes or blades, fixed to a rotating wheel, are placed near the nozzles so that the jets of steam are directed against them. These blades or vanes thus set in motion move the wheel and with it the shaft which transmits the power.

Theoretically the work from expanding steam behind a piston is exactly the same as that we obtain from a nozzle. The difference is only in the method for making the heat energy available for doing work.

Before going farther with the discussion of how the steam turbine converts heat energy into work, the more familiar case of the reciprocating steam engine will be considered briefly, because it is assumed the reader is already more or less familiar with its heat processes. By the **static pressure** in the steam pipes and in the boiler the steam is pushed into the engine cylinder and causes the piston to move up to the point where the supply of steam is shut off. Then the steam expands, reducing, at the same time, the pressure till the piston has reached the end of the cylinder. On the return stroke the steam is discharged at a nearly constant low pressure into the atmosphere or into a condenser. Now on the " working " stroke when the steam is being pushed into the cylinder,* and when it is expanding, the steam is doing work at the expense of the heat energy put into it by the fires under the boiler. The heat in a pound of steam at a given pressure and temperature represents a definite amount of energy. Expansion of the steam in the cylinder after cut-off is accompanied, therefore, with a reduction of pressure and temperature, and the work done is in proportion to the heat energy lost by the steam. Thus **heat energy and work go hand in hand.** A loss to one is a gain to the

* Until the point of cut-off is reached, all the time that steam is being pushed into the cylinder work is being done at the expense of the boiler pressure. Actually the pressure in the boiler is a little lower after the amount of steam required for a stroke has been taken out than it was before. When, however, the strokes of the engine come in quick succession, the variation in boiler pressure is not perceptible.

other. **Fig. 7** shows a typical steam engine indicator card, representing, diagrammatically, the heat relations that have just been discussed. The horizontal scale of coördinates (abscissas) represents **volumes,** and the vertical scale (ordinates) represents **pressures.** It is obvious then that any area included by the lines of this diagram represents work done by the steam. In this figure P_1 and v_1 represent **initial pressure and volume,** and P_2 and v_2 the **corresponding final conditions,** meaning the pressure and volume at the end of the "working" stroke. This diagram as it applies to the steam engine may be analyzed briefly as follows:

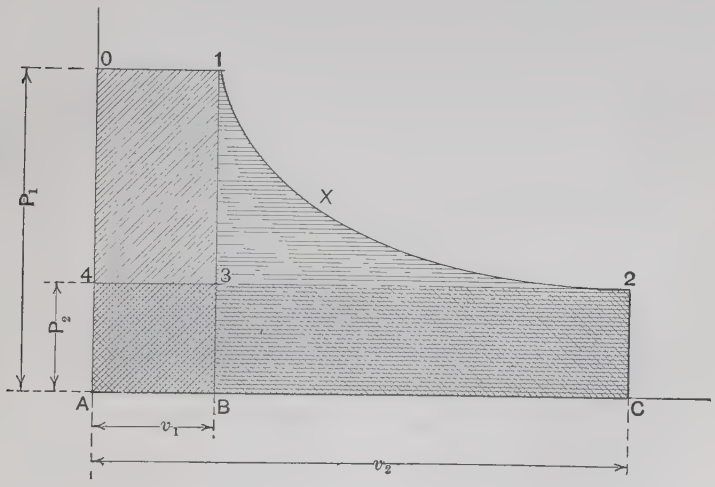

FIG. 7. Pressure-Volume Diagram Showing Work Areas.

1. Area **A01B** is the work done in "pushing" the steam into the cylinder against the resistance of the piston to motion.

2. Area **12CB** is the work done when the steam is expanding.

3. Area **A432C** is the work lost in the heat energy discharged in the exhaust.*

4. Area **4012 3** is the **net** work done.

The discussion given above is, of course, for the ideal case where the cylinder clearance is neglected and expansion to back-pressure (P_2) is complete.

* If an almost perfect vacuum were attainable this loss would be practically negligible. Actually with the best condensing apparatus it is quite large.

The same diagram (Fig. 7) can also be used for the analysis of the work done by steam expanding in the nozzles or similar passages * of a turbine. The work done in " pushing " the steam into the engine cylinder has its counterpart now in the work done by the steam in entering the nozzle, so that,

1. Area **AO1B** is the **work done in " pushing " the steam** out of the pipes or receiving vessels **into the nozzle.**†

2. Area **12CB** is the work done during **expansion** at the expense of the heat energy, **to give velocity** to the steam.

3. Area **A432C** is **work lost** by the steam in forcing its way against the external or exhaust pressure.

4. Area **40123** is the **work done in producing velocity.**

The work of " pushing " the steam into the nozzle produces **initial velocity**‡, or "velocity of approach." In all practical steam turbine nozzles this initial velocity, compared with the **final velocity after expansion,** is very small. For this reason, in the calculations required for the designing of nozzles and blades, this initial velocity is usually neglected. Practical designers, therefore, are interested only in the heat energy of the area **123** and the velocity it represents. In order to secure high efficiency and low steam consumption the designer is always striving to make this area as large as possible, allowing, of course, for other limiting conditions.

As the result of the comparison of the heat functions of steam turbines and reciprocating steam engines, we should observe, then, that the heat energy in a pound of steam available for performing useful work is exactly the same whether the steam goes to the one or to the other. It follows then also that, **theoretically,**

* In some types of turbines there are no nozzles, but instead stationary blades are used which are arranged to expand the steam just as in a nozzle. In this chapter, therefore, where the term "nozzle" is used it will be assumed to apply as well to stationary "expanding" blades.

† The amount of this work, or the area AO1B, is very small in the case of the turbine compared with that in the steam engine.

‡ This initial velocity, V_0, is calculated from the relation $P_1 v_1 = \frac{V_0^2}{2g}$, where P_1 and v_1 are the initial pressure and volume of a pound of steam and g is the acceleration due to gravity (32.2). All velocities are in feet per second.

the steam consumption for the same conditions of temperature and pressure is the same for the turbine as for any other form of engine. Discussion of the merits of different forms of steam motors with only the theoretical viewpoint in mind is, therefore, useless. Only the conditions in practice affecting the design of commercial machines are of any significance in determining the type of steam motor to be used for given conditions of service.

HEAT THEORY RELATING TO THE DESIGN OF NOZZLES AND BLADES.

Diagrams similar to those made on a steam engine indicator (**Fig. 7**), showing for an engine stroke the conditions of **pressure and volume** inside the cylinder, are very useful in the design and operation of **reciprocating steam engines,** but they are of very little use for work relating to steam turbines. In a steam turbine it is not practicable to put a measured amount of steam through a nozzle "at a time" as the flow is practically continuous. The pressure-volume diagram has, therefore, a very limited application. **Another kind of diagram, the details of which are somewhat more difficult to understand, is universally used by steam turbine engineers.** In this diagram, which will now be described, **any surface represents accurately to given scales a quantity of heat. Absolute temperatures** (**T**) are the **ordinates,** and **entropies** * (ϕ) are the **abscissas.**

* Entropy, which Perry calls the "ghostly quantity," has no real physical significance, so that complete definition is not possible. If dQ is a small amount of heat added to a body, and T is the absolute temperature at which the heat is added, then the change in entropy of that body is $\frac{dQ}{T}$, or $d\phi = \frac{dQ}{T}$. Entropy of saturated steam above the entropy of water at the freezing point (32° F.) is easily calculated; but for low temperatures, its values are unknown because of the lack of data regarding the specific heats. For saturated steam at any pressure, then, $\phi = \frac{xr}{T} + n$ (or θ), where x is the quality of the steam, r is the latent heat of evaporation or "heat of vaporization," T is the absolute temperature, and n (or θ) is the entropy of the liquid (water). All values of latent heat of evaporation, heat of the liquid, total heat, etc., given in steam tables are in heat units above 32° F.

The symbols used here are those given in Marks and Davis' *Steam Tables and Diagrams*, published by Longmans, Green & Co., New York, and in Goodenough's *Properties of Steam*, published by John Wiley & Sons, New York.

Fig. 8 shows a simple heat diagram laid out with absolute temperature and entropy for the coördinates. Steam at a certain condition of temperature and entropy is represented here by the point **A.** Then if some heat is added, increasing both temperature and entropy, the final condition is represented by the point **B,** and the **area ABCD represents the heat added in passing from the condition at A to the condition at B.** Such a diagram is usually called a **temperature-entropy diagram,** although the name **heat diagram** would probably be more appropriate, since **every area in expansions following a simple law represents a definite amount of heat.**

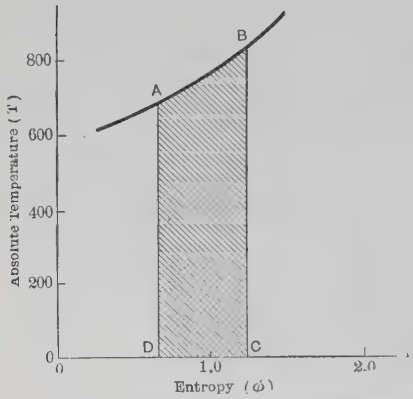

FIG. 8. A Simple Temperature-Entropy Diagram.

Another temperature-entropy diagram is shown in **Fig. 9, representing by the various shaded areas the heat added to water** initially at the **absolute zero** of temperature to warm and **completely vaporize** it at the temperature of evaporation of steam corresponding to the pressure P_1. The unshaded area under the irregular curve **AA′B*** represents the heat in a pound of water at the freezing point (32° F. or 492° in absolute temperature). The area **OBCD** is the heat added to the water to bring it to the temperature of vaporization, or in other words, this last area represents the heat of the liquid (q) given in the steam tables for the pressure P_1. Further heating after vaporization begins is **at the constant temperature** T_1 (corresponding to the pressure P_1) and is represented by an increasing area under line **CE.** When "steaming" is complete, the latent heat of evaporation is the area **DCEF.** If after all the water is vaporized

* The area $A''A'BO$ represents the latent heat of fusion of ice, or it is the amount of heat that must be put into ice while melting, without producing a change of temperature.

more heat is added, the steam becomes **superheated,** and the additional heat required would be represented by an area to

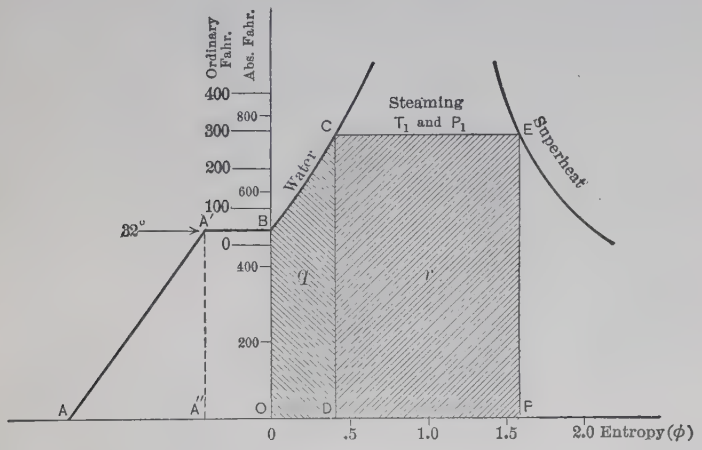

FIG. 9. Temperature-Entropy Diagram showing the Total Heat in Dry Saturated Steam at the Temperature T_1 (measured from the Absolute Zero of Temperature).

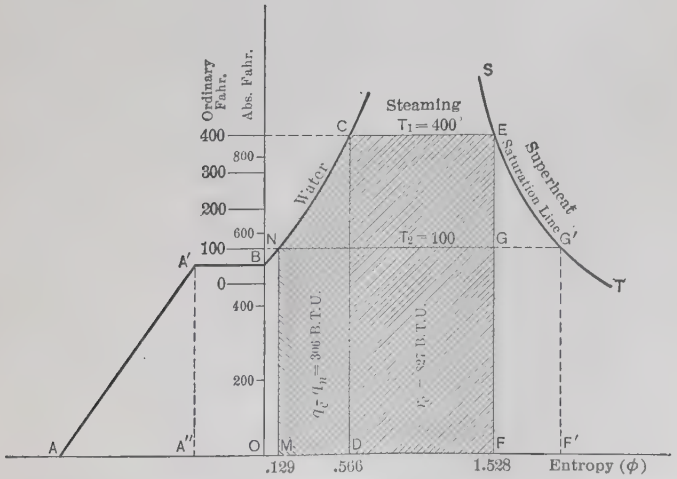

FIG. 10. Practical Example Illustrated with a Temperature-Entropy Diagram.

the right of **EF.** (See Fig. 14.) The use of the temperature-entropy diagram for showing the behavior of steam during

expansion will now be discussed and illustrated with a practical example.

Fig. 10 illustrates the heat process going on when feed water is received in the boilers of a power plant at 100° F., is heated and converted into steam at a temperature of 400° F., and then loses heat in doing work. When the feed water first enters the boiler its temperature must be raised from 100° to 400° F. before any "steaming" begins. The heat added to the liquid is the area **MNCD.** This area represents the difference between the heat of the liquid of steam at 400° F. (q_e) and at 100° F. (q_n) and is about 306 B.T.U. The horizontal or entropy scale shows that the difference in entropy between water at 100° and 400° F. is about .437.*

Every reader should understand how such a diagram is constructed and especially how the curves are obtained. In this case the **curve NC is made** by plotting from the steam tables the values of the **entropy of the liquid** (usually marked with the symbol **n** or θ) for a number of different temperatures between 100° and 400° F. and connecting the plotted points with a smooth curve.

Now when water at 400° F. is converted into steam at that temperature, the curve representing the change is necessarily a constant temperature line and therefore a horizontal, **CE.** Provided the vaporization has been complete, the heat added in the "steaming" process is the latent heat of evaporation of steam (**r**) at 400° F., which, from the steam tables, is approximately 827 B.T.U.

The **change in entropy during vaporization** is, then, the heat units added (827) divided by the absolute temperature at which the change occurs (400 + 460 = 860° F. absolute) or

$$\frac{r}{T} = \frac{827}{860} = .962 \text{ (see footnote, page 17).}$$

The **total entropy of steam** completely vaporized at 400° F. is,

* As actually determined from Marks and Davis' *Steam Tables*, pp. 9 and 15, the difference in entropy is .5663 — .1295 or .4368. Practically it is impossible to construct the scales in the figure very accurately.

therefore, the sum of the entropy of the liquid (water) .566 and the entropy of the steam .962, or 1.528.* To represent then this final condition of the steam, the point **E** is plotted on a horizontal line through **C** where the entropy measured on the horizontal scale is 1.528, as shown in the figure.† The area **MNCEF** represents then the total heat added to a pound of feed water at 100° F. to produce steam at 400° F., and the area **OBCEF** represents, similarly, the total heat (**H** in the steam tables) in a pound of steam at 400° F. above that in water at 32° F.

Adiabatic Expansion and Available Energy. The practical example illustrated by **Fig. 10** will also be used to explain how the temperature-entropy diagram can be used to show, for ideal conditions, how much work can be obtained by a theoretically perfect engine from the **adiabatic expansion** of a pound of steam. When steam expands adiabatically — without a gain or loss of heat — its temperature falls. Remembering that areas in the temperature-entropy diagram represent quantities of heat and that **in this expansion there is no exchange of heat,** it is obvious that the **area under a curve of adiabatic expansion must be zero;** and this condition can be satisfied only by a vertical line which is a line of constant entropy.‡ For the case in Fig. 10 the expansion curve will lie, therefore, **along** the vertical line **EF,** and if the temperature falls to 100° F. the expansion will be

* In all steam tables, entropy, like the total heat (H), the heat of the liquid (q), and the heat of evaporation (r), is measured above the condition of freezing water (32° F.).

† The point E is shown located on another curve ST, which is determined by plotting a series of points calculated the same as E, but for different pressures. If more heat had been added than was required for vaporization, the area $DCEF$ would have been larger and E would have fallen to the right of ST, indicating by its position that the steam had been superheated. The curve ST is therefore a "boundary line" between the saturated and superheated conditions. This curve can also be plotted from the values of temperature and entropy obtained from a table of the entropy of dry saturated steam.

‡ Since in an adiabatic expansion there is no change of entropy, lines of constant entropy, in practice, are often called "adiabatics." It is very rare in steam turbine work that the expansion in a nozzle departs far from the adiabatic. For this reason other kinds of expansion are not mentioned here.

from **E** to **G**. During this change some of the steam has been condensed.* If now heat is removed from this mixture of steam and water as it exists at **G** till all the steam is reduced to the liquid state, **but without further lowering of the temperature,** the horizontal line **GN** will represent the change in its condition. The quantity of heat absorbed in this last process—technically known as **condensing the steam**—is represented by the area **MNGF,** and the **heat converted into work** is, therefore, the area **NCEG;** and this is called the **available energy.** By means of diagrams like those in the preceding figures, it will now be shown how the **available energy of dry saturated steam** for any given conditions **can be readily calculated** from the data given in steam tables.

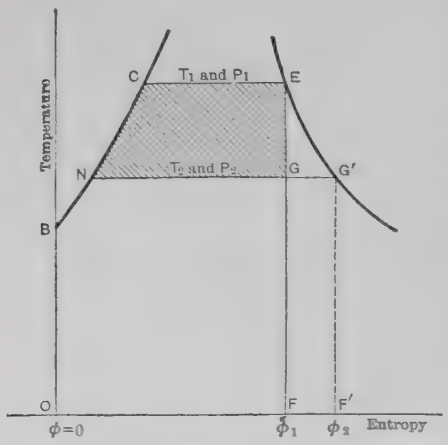

FIG. 11. Temperature-Entropy Diagram for Steam Initially Dry and Saturated.

Fig. 11 is a temperature-entropy diagram representing dry saturated steam which is expanded **adiabatically** from an **initial** temperature T_1 corresponding to a pressure P_1 to a lower **final**

* For the steam to be *dry* and saturated at the end of this process, the expansion would have been along the *saturation line ET*, and *G* would have appeared at *G'*.

The heat of the liquid, q, of a pound of steam at 100° F. is represented by *OBNM*, and the heat of evaporation r is *MNG'F'*, so that the total heat $q + r$ or H is *OBNG'F'*. The total heat of wet steam is expressed by $q + xr$, where x is the quality or relative dryness. In the case of this adiabatic expansion, then, q is as before *OBNM* and xr is *MNGF*. It is obvious also that the lines *NG* and *NG'* have the same relation to each other as the areas under them, so that

$$\frac{\text{line } NG}{\text{line } NG'} = \frac{\text{area } MNGF}{\text{area } MNG'F'} = \frac{xr}{r}, \quad \text{or} \quad \frac{NG}{NG'} = x,$$

showing that the quality of the steam at any point, *G*, on a constant temperature line which for saturated steam is also a constant pressure line, is determined as in this case by the ratio of *NG* to *NG'*.

temperature T_2 corresponding to a pressure P_2. The other initial and final conditions of total heat **H** and entropy ϕ (above 32° F.) are represented by the same subscripts 1 and 2. The **available energy or the work** that can be done by a perfect engine under these conditions **is the area NCEG.** It is now desired to obtain a simple equation expressing this **available energy E_a in terms of total heat, absolute temperature, and entropy.** Explanations of the preceding figures should make it clear that

H_1 = area **OBNCEGF,**
H_2 = area **OBNG′F′,**
E_a = area **NCEG** = areas (**OBNCEGF** + **FGG′F′**) − **OBNG′F′,**
$E_a = H_1 - H_2 + FGG'F'$,

therefore $E_a = H_1 - H_2 + (\phi_2 - \phi_1) T_2$.* (1)

An application of this equation will be made at once to determine the heat energy available from the adiabatic expansion of a pound of dry saturated steam at an initial pressure of 165 pounds per square inch absolute to a final pressure of 15 pounds per square inch absolute.

Example. $P_1 = 165$ $T_1 = \ldots$
$P_2 = 15$ $T_2 = 673.0$ from steam tables.†
$H_1 = 1195.0$ from steam tables.
$H_2 = 1150.7$ from steam tables.
$\phi_1 = 1.5615$ from steam tables.
$\phi_2 = 1.7549$ from steam tables.

Substituting these values in equation (1), we have

$E_a = 1195.0 - 1150.7 + (1.7549 - 1.5615)\, 673.0 =$ **174.46**

B.T.U. per pound of steam.

Now if in a suitable piece of apparatus like a steam turbine nozzle, all this energy that is theoretically **available** could be

* It should be observed that this form is for the case where the steam is initially dry and saturated. For the case of superheated steam a slightly different form is required which is given on page 30.

† The values of the properties of steam given in the exercises are taken from Marks and Davis' *Steam Tables and Diagrams.*

changed into velocity, then we have by the well-known formula in mechanics,* for unit mass,

$$\frac{V^2}{2g} = E_a \text{ (foot-pounds)} = E_a \text{ (B.T.U.)} \times 778,$$

$$V = \sqrt{778 \times 2gE_a} = 223.7\sqrt{E_a}, \qquad (2)$$

where **V** is the velocity of the jet and **g** is the acceleration due to gravity (32.2), **both in feet per second.**

Solving then for the theoretical velocity obtainable from the available energy in the practical example above,

$$V = 223.7\sqrt{174.46} = 223.7 \times 13.20 = 2953 \text{ feet per second.}\dagger$$

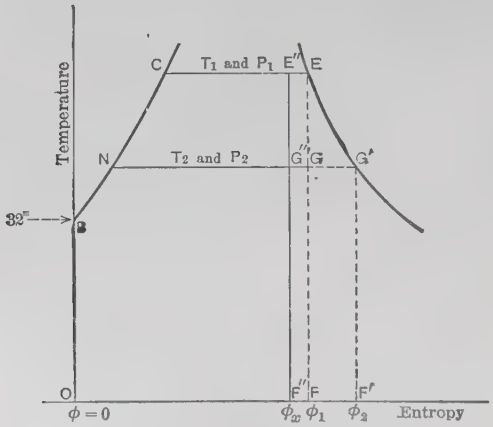

FIG. 11a. Temperature-Entropy Diagram for Wet Steam.

The **important condition assumed** as the basis for the determination of equation (1), that the **steam is initially dry and saturated,** must not be overlooked in its application. There are, therefore, two other cases to be considered:

(1) when the steam is initially wet,
(2) when the steam is initially superheated.

Available Energy of Wet Steam. Initially wet steam is easily treated in the same way as dry saturated steam. **Fig. 11a** is an

* See Church's *Mechanics of Engineering*, p. 672, or Jameson's *Applied Mechanics and Mechanical Engineering*, vol. I, p. 47.

† Losses in nozzles are neglected. A carefully made nozzle may have practically 100 per cent efficiency. For discussion of nozzle losses see pages 57, 58, and 104.

example of the case in hand. At the initial pressure P_1, the total heat of a pound of wet steam $(q_1 + x_1 r_1)$ is represented in this diagram by the area **OBNCE″F″**. The initial quality of the steam (x_1) is represented by the ratio of the lines $\frac{CE''}{CE}$. The available energy from adiabatic expansion from the initial temperature T_1 (corresponding to the pressure P_1) to the final temperature T_2 (corresponding to the pressure P_2) is the area **NCE″G″**. If we call this **available energy** E_{aw}, we have

$$E_{aw} = \text{area } \mathbf{OBNCEGF} + \mathbf{FGG'F'} - \mathbf{OBNG'F'} - \mathbf{G''E''EG},$$

$$E_{aw} = H_1 - H_2 + (\phi_2 - \phi_1)\, T_2 - (\phi_1 - \phi_x)\,(T_1 - T_2),^*$$

$$E_{aw} = H_1 - H_2 + (\phi_2 - \phi_1)\, T_2 - \frac{r_1}{T_1}(1 - x_1)\,(T_1 - T_2). \qquad (1')$$

The velocity corresponding to this energy is found by substitution in equation (2), just as for the case when the steam was initially dry and saturated.

Example. Calculations for the velocity resulting from adiabatic expansion for the same conditions given in the preceding example on page 23, except that the steam is initially 5 per cent. wet, are given below.

$P_1 = 165$ lbs. abs. $\quad T_1 = 826.0°$ F.
$P_2 = 15$ lbs. abs. $\quad T_2 = 673.0°$ F.
$H_1 = 1195.0$ B.T.U.
$H_2 = 1150.7$ B.T.U.
$\phi_1 = 1.5615.$
$\phi_2 = 1.7549.$
$r_1 = 856.8$ B.T.U.
$x_1 = 1.00 - .05 = .95.$

* In general terms, $\phi = \frac{xr}{T} + \theta$. Here $\phi_1 = \frac{r_1}{T_1} + \theta_1$ because $x = 1$.

$$\phi_x = \frac{x_1 r_1}{T_1} + \theta_1.$$

$$\phi_1 - \phi_x = \frac{r_1}{T_1}(1 - x_1).$$

$$E_{aw} = 1105.0 - 1150.7 + (1.7540 - 1.5015)\,673.0 - \frac{856.8}{820.0} \times .05\,(826.0 - 673.0),$$

$$E_{aw} = 166.53 \text{ B.T.U.}$$

$$V = 223.7\sqrt{E_{aw}} = 223.7 \times 12.90 = 2886 \text{ feet per second.}$$

It is observed that the theoretical velocity is reduced from 2953 to 2886 feet per second by the presence of moisture in the steam. The percentage reduction in velocity is, however, only about 2 per cent. while the amount of moisture is 5 per cent. Moisture in steam produces still other and greater losses in turbines, which will be studied later.

Available Energy of Superheated Steam.* In the following paragraphs the significance of the temperature-entropy curves for superheated steam will be explained, and it will be shown also how they are to be used to determine the available energy and the corresponding theoretical velocity resulting from adiabatic expansion in a nozzle.

Specific Heat of Superheated Steam. In modern practice, superheated steam often enters our calculations and a troublesome modification of the entropy diagram results. The difficulty arises because the specific heat of superheated steam is not at all accurately known. The diagrams in the appendix are calculated for the specific heat determinations by Knoblauch and Jakob.† The specific heat of steam varies with the temperature and pressure as shown in Figs. 12 and 13, giving values of the mean and the true specific heat at constant pressure (C_p).

* In the following pages the important properties of superheated steam with which the modern engineer must deal will be briefly discussed. It is generally recognized that a gain in steam economy results from the use of superheated steam in either steam turbines or reciprocating engines, but an accurate analysis of tests for the actual gain in economy of a plant is very difficult because there are so many factors entering. The peculiar circumstance, also, that water can exist indefinitely in the liquid state in the presence of superheated steam, makes conclusions from experimental data often uncertain.

† Values of mean specific heat are taken from *Mechanical Engineer*, vol. XX, page 110, and Professor L. M. Jacobus's paper in *Proc. American Society of Mechanical Engineers*, vol. XXIX, page 280.

True specific heat represents the ratio of the amount of heat to be added to a given weight of steam at some particular condition of temperature and pressure to raise the temperature one degree to that required to raise the temperature of water at maximum density one degree. The **mean specific heat** is almost invariably used in steam turbine calculations.

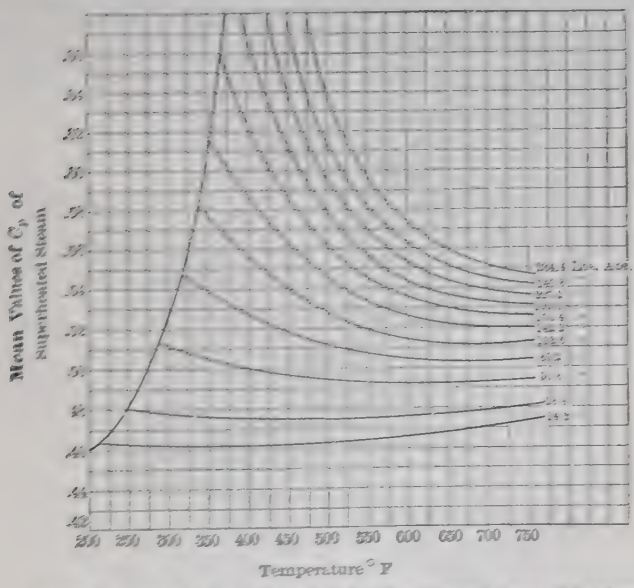

FIG. 12. Mean Values of C_p Calculated by Integration from Knoblauch and Jakob's Data.

Temperature-Entropy Diagram of Superheated Steam. The graphic representation of the heat added during the superheating of steam is easily accomplished with temperature-entropy diagrams. Fig. 14 shows a diagram similar to that representing dry saturated steam in Fig. 11, with the added area FEH,J to show the superheating from the temperature T_1 corresponding to the pressure P_1 to the temperature of the superheated steam, T_s. The total heat in a pound of steam above 32° F. is now represented by the area OBCEH,J. For adiabatic expansion of superheated steam at the temperature T_s and pressure P_1 to a pressure P_2 the available energy is the area LCEH,G.

Too much calculation is involved in the construction of entropy diagrams to make a new diagram for every particular case from the properties usually found in steam tables; but the construction of such diagrams should be understood. From the expla-

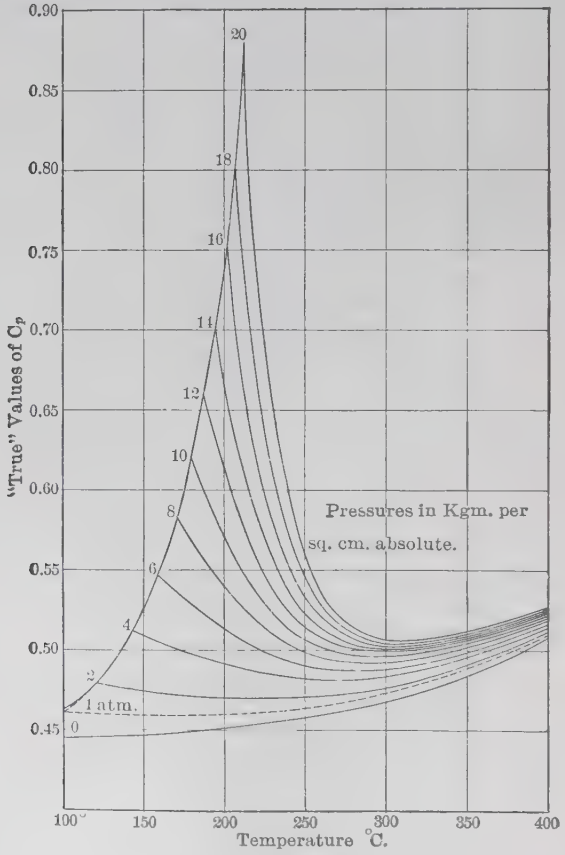

FIG. 13. Values of the "True" Specific Heat of Superheated Steam.

nations that have preceded, the construction of all the lines except $\mathbf{EH}_s$ should be obvious. This line is obtained by calculating the "change" or increase in the *entropy* of superheated steam for various values of *temperature* (between $\mathbf{T}_s$ and $\mathbf{T}_1$) from the following well-known relations:

$$\phi_s - \phi_1 = \int \frac{dQ}{T} = \int_{T_1}^{T_s} \frac{C_p dT}{T},$$

or $$\phi_s - \phi_1 = \mathbf{C}_{pm}\left[\log_e \frac{T_s}{T_1}\right] = 2.3028\, C_{pm}\left(\log_{10} \mathbf{T}_s - \log_{10} T_1\right),$$

where $\mathbf{C}_{pm}$ is the **mean value** of the specific heat of steam taken from the curves in **Fig. 12** for the temperature $\mathbf{T}_s$.

The amount of energy that becomes available in the adiabatic expansion of superheated steam is very easily expressed with

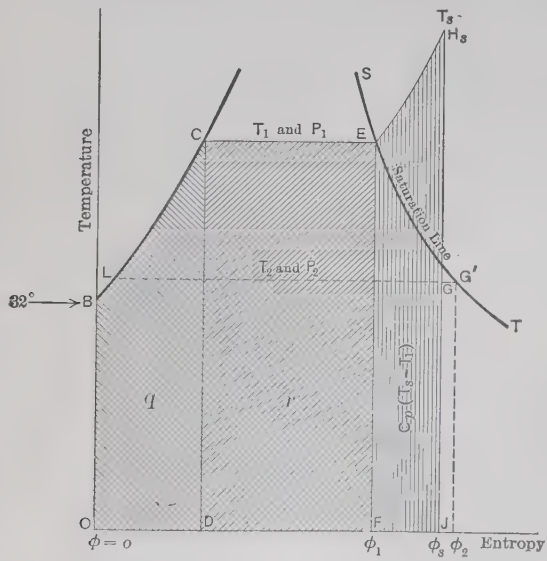

FIG. 14. Simple Temperature-Entropy Diagram for Superheated Steam.

the help of **Fig. 14a.** Two conditions after expansion must be considered:

(1) When the steam in the final condition is superheated,

(2) When the steam in the final condition is wet (or dry saturated).

Using **Fig. 14a** with the notation as before except that $\mathbf{E}_{as}$ is the available energy from the adiabatic expansion of steam initially superheated in B.T.U. per pound, ϕ_s and $\mathbf{H}_s$ are respectively the total entropy and the total heat of the superheated

steam at the initial condition, then obviously from the diagram, when the steam is **wet at the final condition,**

$$\mathbf{E}_{as} = \mathbf{H}_s - \mathbf{H}_3 + (\phi_3 - \phi_s)\,\mathbf{T}_3. \qquad (1'')$$

When the steam is superheated at the final condition, as, for example, when the temperature after expansion is $\mathbf{T}_2'$,

$$\mathbf{E}_{as} = \mathbf{H}_s - \mathbf{H}_2 - (\phi_s - \phi_2)\,\mathbf{T}_2.^* \qquad (1''')$$

It will be observed that these equations (1″) and (1‴) are the same in form as equation (1), page 23, and that equation (1″) differs essentially in having the terms $\mathbf{H}_s$ and ϕ_s in the place of $\mathbf{H}_1$ and ϕ_1. In other words equation (1) can be used for superheated steam if the total heat and entropy are read from the steam tables for the required degrees of initial superheat.

The following examples illustrate the simplicity of calculations with these equations: †

Example. Steam at 150 pounds per square inch absolute pressure and 300° F. superheat is expanded adiabatically to 1 pound per square inch absolute pressure. How much energy in B.T.U. per pound $\mathbf{E}_{as}$ is made available for doing work? (Steam is **wet** in its final condition.)

Solution. $\mathbf{H}_s = 1348.8$ B.T.U. per pound,
$\mathbf{H}_3 = 1103.6$ B.T.U. per pound,
$\phi_3 = 1.980$,
$\phi_s = 1.732$,
$\mathbf{T}_3 = 559.6°$ F.,
$\mathbf{E}_{as} = 1348.8 - 1103.6 + (1.980 - 1.732)\,559.6$
$= 383.9$ B.T.U. per pound.

The result above may be checked with the total heat-entropy chart in Marks and Davis' *Steam Tables and Diagrams* (Diagram I), and obtain (1349–967) or 382 B.T.U. per pound.

* This is only approximately correct because the continuation of the line T_2 to T_s' is not quite horizontal, and T_s' is usually unknown except as read from a chart.

† *Elements of Engineering Thermodynamics*, by Moyer, Calderwood, and Potter, Third Edition, Revised, pages 128–140 (John Wiley & Sons, New York).

Example. Data same as in preceding example except that the final pressure is now 35 pounds per square inch absolute. (Final condition of steam is **superheated.**) Calculate $\mathbf{E}_{as}$.

Solution. $\mathbf{H}_s = 1348.8$ B.T.U. per pound,
$\mathbf{H}_2 = 1166.8$ B.T.U. per pound,
$\phi_s = 1.732$,
$\phi_2 = 1.6868$,
$\mathbf{T}_2 = 718.9°$ F.,
$\mathbf{E}_{as} = 1348.8 - 1166.8 - (1.7320 - 1.6868)\,718.9$
$= 149.5$ B.T.U. per pound.

Equations can also be written, as illustrated in **Fig. 14,** for the available energy $\mathbf{E}_{as}$ for superheated steam when the final condition is " wet " thus,

$$\mathbf{E}_{as} = \mathbf{H}_1 - (\mathbf{h}_2 + \mathbf{x}_2\mathbf{r}_2) + \mathbf{C}_{pm}(\mathbf{T}_s - \mathbf{T}_1),$$

or in a different form as,

$$H_1 - H_2 + C_{pm}(T_s - T_1) + (\phi_2 - \phi_s)\,T_2.$$

When at the final condition it is superheated, then

$$\mathbf{E}_{as} = H_1 - H_2 + C_{pm}(T_s - T_1) - C_{pm}(T_s' - T_2),$$

where other symbols are used as before and T_s is initial temperature and $\mathbf{T}_s'$ is the final temperature when superheated.

The shaded area **NCEG** in **Fig. 11** is also known as the theoretical **Rankine cycle** for the case where the steam supplied is initially dry saturated. The available energy $\mathbf{E}_a$, therefore, as given by equation (1) on page 23, multiplied by 778 gives the maximum theoretical foot-pounds of work that can be accomplished with this cycle, neglecting losses, from a pound of dry steam. There are $33{,}000 \times 60$ foot-pounds in one horsepower-hour, and hence dividing $33{,}000 \times 60$ by $\mathbf{E}_a \times 778$* we get the **theoretical steam consumption** or **theoretical " water rate "** of a turbine using the ideal Rankine cycle with steam initially dry saturated. Similarly the area **NCE''G''** in **Fig. 11a** shows the

* The energy theoretically available for doing work in foot-pounds per pound of steam is $E_a \times 778$.

available work for the theoretical Rankine cycle when the steam is initially wet, and the theoretical steam consumption of the Rankine cycle for this case is 33,000 × 60 divided by E_{aw} * × 778.

Fig. 14 shows also the Rankine cycle for steam initially superheated. Calculation of theoretical steam consumption is similar to the cases already explained.

The most important part of the design of a nozzle is the determination of the areas of the various sections — especially the

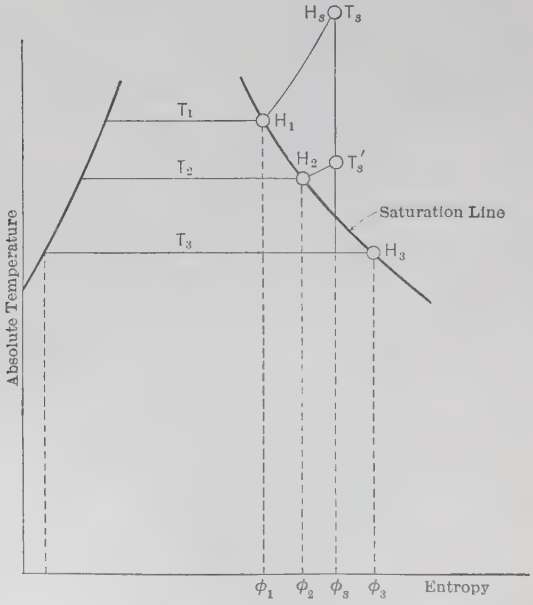

FIG. 14a. Temperature-Entropy Diagram for Superheated Steam.

smallest section, if the nozzle is of an expanding or diverging type. Various forms of standard nozzles are shown in **Fig. 15.** In order to calculate the areas of nozzles we must know how to determine the quantity of steam (flow) per unit of time passing through a unit area. It is very essential that the nozzle is well rounded on the "entrance" side and that sharp edges along the path of the steam are avoided. Otherwise it is not impor-

* From equation (1′), page 25.

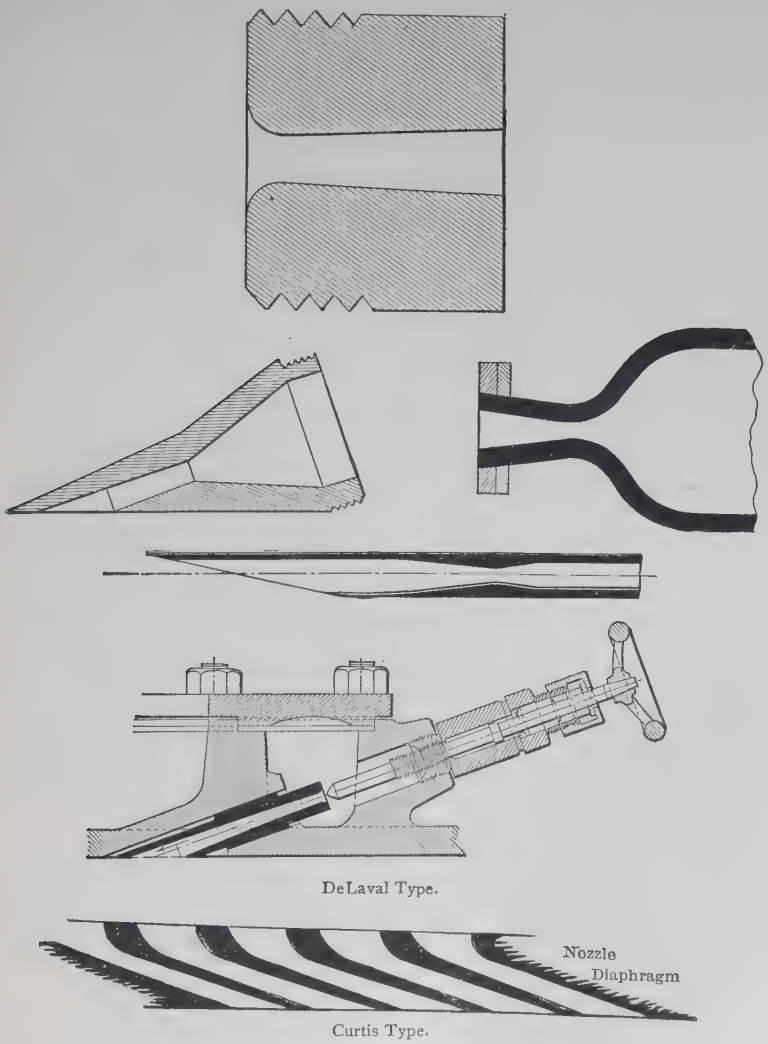

FIG. 15. Examples of Standard Designs of Nozzles.

tant whether the shape of the section is circular, elliptical, or rectangular with rounded corners. Typical " square," " rectangular " and circular nozzle sections used in different makes of commercial turbines are shown in **Fig. 15a.**

General Remarks Regarding Nozzles. Finally it may be stated that there is practically no difference in the efficiency of the nozzles used in commercial turbines if they have smooth surfaces and are properly designed for the correct ratio of the

FIG. 15a. Sections of Nozzles Used in Commercial Turbines.

area at the throat to that at the mouth, and if the length is not made much less than, nor more than possibly twice, that calculated by the formula given on page 55.

Nozzle Efficiency. Whether the nozzle section is circular, or rectangular (if these last sections have rounded corners) the efficiency as measured by the **velocity** will be about 96 to 97 per cent., corresponding to an equivalent **energy efficiency** * of 92 to 94 per cent. Speaking commercially, therefore, it does not seem to be worth while to spend a great deal of time in the shops to make nozzles very exactly to some difficult shape. Simpler and more rapid methods of nozzle construction should be introduced. In some shops the time of one man for two days is required for the hand labor alone on a **single** nozzle.

Example. Calculate the work done in foot-pounds by one pound of steam expanding behind a piston in a reciprocating engine for the conditions given in the example on page 23. (See discussion on page 16.) *Ans.* 174.2 × 778 ft.-lbs.

Example. If the flow of dry steam at 165 pounds per square inch absolute pressure from a nozzle with a cross-sectional area of .00128 square foot is 2 pounds per second, what is the velocity of the discharging jet?

At the pressure stated steam has a specific volume of 2.75 cubic feet per pound (from steam tables).

* Velocity is proportional to the square root of the available energy; and $\sqrt{.92} = .96$, also $\sqrt{.94} = .97$. Therefore, 4 per cent velocity loss, for example, is equivalent to 8 per cent energy loss.

Let V = velocity of discharge (ft. per sec.)
A = area of nozzle = .00128 sq. ft.
AV = volume discharged (cu. ft. per sec.)

$$.00128\ V = 2 \times 2.75$$
$$V = 4297 \text{ ft. per sec.}$$

If turbine blades could be made to transform all this velocity into useful work, how much horsepower could be transmitted to machinery from its shaft?

$$\text{Kinetic energy of jet (ft.-lbs. of work per sec.)} = \frac{WV^2}{2g},$$

where W is the weight in pounds of the steam flowing and g is the acceleration due to gravity (32.2 ft. per sec.).

$$\text{Horsepower} = \frac{\text{ft.-lbs. of work per sec.}}{550}$$
$$= \frac{2 \times (4297)^2}{2 \times 32.2 \times 550}$$
$$= \text{about } 1043 \text{ h.p.}$$

Example. What is the theoretical steam consumption (water rate) of the Rankine cycle for the conditions given in the example on page 23; that is, for steam initially dry saturated?

Ans. $\frac{33{,}000 \times 60}{174.46 \times 778}$.

Example. What is the theoretical steam consumption of the Rankine cycle for steam initially wet at the conditions stated in the example on page 25?

Ans. $\frac{33{,}000 \times 60}{166.53 \times 778}$.

CHAPTER III.

FLOW OF STEAM AND NOZZLE DESIGN.

Flow of Dry Saturated Steam through Nozzles. The weight of steam discharged through any well-designed nozzle with a rounded inlet, similar to those shown in Figs. 13 and 14, **depends on the initial absolute pressure (P_1), if the pressure against which the nozzle discharges (P_2) does not exceed .58 of the initial pressure.** This important statement is well illustrated by the following example. If steam at an initial pressure (P_1) of 100 pounds per square inch absolute is discharged from a nozzle, the weight of steam flowing in a given time is practically the same for all values of the pressure against which the steam is discharged (P_2) which are equal to or less than 58 pounds per square inch absolute.

If, however, the **final pressure is more than .58 of the initial, the weight of steam discharged will be less, nearly in proportion as the difference between the initial and final pressures is reduced.** (See pages **41** and **42**.)

The most satisfactory formula for the "constant flow" condition, meaning when the final pressure is .58 of the initial pressure or less, is the following where F is the flow of steam (initially dry saturated) in pounds **per second,** A_0 is the area of the smallest section of the nozzle in square inches, and P_1 is the initial **absolute** pressure of the steam in pounds per square inch,

$$F = \frac{A_0 P_1^{.97}}{60}, \qquad (3)$$

or, in terms of the area,

$$A_0 = \frac{60\,F}{P_1^{.97}}. \qquad (3')$$

These formulas are for the flow of steam **initially dry and saturated.** An illustration of their applications is given by the following practical example.

Example. The area of the smallest section (A_0) of a suitably designed nozzle is .54 square inch. What is the weight of the flow (F) of dry saturated steam per second from this nozzle when the initial pressure (P_1) is 135 pounds per square inch absolute and the discharge pressure (P_2) is 15 pounds per square inch absolute?

Here P_2 is less than .58 P_1 and the flow of steam is

$$F = \frac{\cdot 54\,(135)^{.97}}{60},$$

$$F = \frac{\cdot 54 \times 116.5^{*}}{60} = 1.049 \text{ pounds per second.}$$

Flow of Wet Steam. When steam passes through a series of nozzles one after the other as is the case in many types of turbines, the pressure is reduced and the steam is condensed in each nozzle so that it becomes wetter and wetter each time. In the low-pressure nozzles of a turbine, therefore, the steam may be very wet although initially it was dry. Turbines are also sometimes designed to operate with **steam which is initially wet,** and this is usually the case when **low-pressure steam turbines** (see Chapter IX) are operated with the exhaust from non-condensing reciprocating engines. In all these cases the nozzle area must be corrected for the wetness of the steam. For a given nozzle the weight discharged is, of course, greater for wet steam than for dry; but the percentage increase in the discharge is not nearly in proportion to the percentage of moisture as is often stated. The general equation for the theoretic discharge (F) from a nozzle is in the form†

$$F = K\sqrt{\frac{P_1}{v_1}},$$

where P_1 is the initial absolute pressure and v_1 is the specific

* A curve from which values of $\frac{60}{P_1^{.97}}$ can be read is given on page 47 (Fig. 19).

† The general equation for the theoretic flow is

$$F = A_0\sqrt{\frac{2\,gkP_1}{(k-1)\,v_1}\left[\left(\frac{P_2}{P_1}\right)^{\frac{2}{k}} - \left(\frac{P_2}{P_1}\right)^{\frac{k+1}{k}}\right]},$$

volume (cubic feet in a pound of steam at the pressure P_1). Now, neglecting the volume of the water in wet steam, which is a usual approximation, the volume of a pound of steam is proportional to the quality (x_1). For **wet steam** the equation above becomes then

$$F = K\sqrt{\frac{P_1}{x_1 v_1}}.$$

The equation shows, therefore, that the **flow of wet steam is inversely proportional to the square root of the quality** ($\mathbf{x}_1$). Equations (3) and (3′) can be stated then more generally as

$$\mathbf{F} = \frac{\mathbf{A_0 P_1}^{.97}}{60\sqrt{\mathbf{x}_1}}, \tag{4}$$

$$\mathbf{A_0} = \frac{60\,\mathbf{F}\sqrt{\mathbf{x}_1}}{\mathbf{P_1}^{.97}}. \tag{4′}$$

These equations become, of course, the same as (3) and (3′) for the case where $x_1 = 1$.*

where the symbols F, A_0, P_1, and g are used as in equations (2) and (3). P_2 is the pressure at any section of the nozzle, v_1 is the volume of a pound of steam at the pressure P_1, and k is a constant. The flow, F, has its maximum value when

$$\left(\frac{P_2}{P_1}\right)^{\frac{2}{k}} - \left(\frac{P_2}{P_1}\right)^{\frac{k+1}{k}}$$

is a maximum. Differentiating and equating the first differential to zero gives

$$\frac{P_2}{P_1} = \left(\frac{2}{k+1}\right)^{\frac{k}{k-1}}.$$

P_2 is now the pressure at the *smallest section*, and writing for clearness P_0 for P_2, and substituting this last equation in the formula for flow (F) above, we have

$$F = A_0\sqrt{\frac{2gk}{k+1}\left(\frac{P_0}{P_1}\right)^{\frac{2}{k}}\left(\frac{P_1}{v_1}\right)}.$$

Now regardless of what the final pressure may be, the pressure (P_0) at the smallest section of a nozzle (A_0) is always nearly .58 P_1 for dry saturated steam. Making then in the last equation $P_0 = .58\,P_1$ and putting for k the present generally accepted value of 1.30 for superheated steam,

$$F = K\sqrt{\frac{P_1}{v_1}},$$

where K is another constant having the value of 0.3155 A_0. See Peabody's *Thermodynamics of the Steam Engine*, page 132; Zeuner's *Theorie der Turbinen*, page 268.

* Emswiler states as the result of a large number of experiments in the mechanical laboratory of the University of Michigan that the correction factor to be

Flow of Superheated Steam through Nozzles. The discharge of superheated steam from a nozzle is one of the most important subjects of which the engineering profession generally has no correct data. The author has observed in his practice again and again that the formulas ordinarily given for the flow of superheated steam were not correct and more reliable data had to be found. The formulas given here were actually determined from the data of experiments with a 30-horsepower De Laval turbine but were later checked with a great mass of data in the possession of the General Electric Company. The precision with which the formula applies to these data is shown in the table given on the next page.

A formula was desired to express the flow of superheated steam discharged from a nozzle in the form of formula (3) for the flow of dry saturated steam, together with a suitable coefficient to correct for the effect of superheat. A formula of this form is expressed by

$$F = \frac{A_0 P_1^{.97}}{60\,(1 + .00065\,D)}, \text{ or} \qquad (5)$$

$$A_0 = \frac{60\,F\,(1 + .00065\,D)}{P_1^{.97}}, \qquad (5')$$

applied to equation (3) is very nearly $1 \div (1 - .012\,m)$, where m is the per cent. of moisture in the steam. The difference between this formula and the theoretical equations (4) and (4′) is probably due to temporary conditions of supersaturation in the nozzle.

It is usually assumed that the expansion of steam in a nozzle is adiabatic and that expansion in both the superheated and the saturated state takes place in thermal equilibrium, which means that the condensation of steam particles in the saturated state occurs at the same rate as by expansion at constant entropy. Considerable time is required for the drops to form and increase in size in the steam. On this account there is evidence that saturated vapor may produce a *temporary condition* in which the steam may continue to expand as saturated steam without any condensation. This temporary condition of steam is called *supersaturation*. The density of steam in this state is abnormal and higher than the density of saturated steam at the pressure after expansion; also, the temperature at the end of the expansion is lower than the temperature of saturation at that pressure; in this condition, the steam vapor is said to be "undercooled." Supersaturation disappears with the further condensation of part of the vapor. The principal effect of supersaturation in steam nozzles is to increase the discharge of saturated steam about 5 per cent above the amount that would be calculated for saturated steam. Martin contends that steam is never in thermal equilibrium in a turbine until the condenser is reached.

where **F** is the weight in pounds of superheated steam discharged per second, $\mathbf{A}_0$ is the area of the smallest section of the nozzle in square inches, $\mathbf{P}_1$ is the initial pressure in pounds per square inch absolute, and **D** is the superheat in degrees Fahrenheit.

Data for a number of tests with the same initial and final pressures throughout but varying superheats are given below.

Initial pressure $P_1 = 99.25$ pounds per square inch absolute.

Final pressure $P_2 = 14.6$ pounds per square inch absolute.

Number of Test.	1	2	3	4	5	6	7
Temperature of steam, degrees F..	386.6	463.1	491.9	529.7	592.7	703.4	723.6
Superheat, degrees F. (D).....	59.6	136.1	164.9	202.7	265.7	376.4	396.6
Flow, pounds per hour (tests).....	882.0	837.0	824.0	804.0	778.0	735.0	729.0
$(1+.00065\ D)$.....	1.038	1.089	1.107	1.132	1.173	1.245	1.258
Flow, pounds per hour, corrected by formula (5) to equivalent flow of dry saturated steam.....	917.0	910.0	911.0	910.0	914.0	914.0	916.0

Goudie gives the following form, derived from the general equation of flow on page 37 (using $k = 1.30$), for the flow of steam through a nozzle:

(*a*) *Steam initially superheated:* $\mathbf{F} = 0.3155\ A_0 \sqrt{P_1 \div v_1}$, where $\mathbf{v}_1$ = specific volume of steam at initial pressure and superheat and other symbols are used as already explained. Similarly the velocity in the throat in feet per second, $\mathbf{V}_0 = 72.24 \sqrt{P_1 v_1}$.

(*b*) *Steam initially dry:* $\mathbf{F} = 0.3004\ A_0 \sqrt{P_1 \div v_1}$. This equation has been worked out on the assumption that the steam remains *supersaturated* during its expansion from initial to throat conditions; that is, no condensation from adiabatic expansion takes place and hence the specific volume is less than if there is normal condensation.

Volume of Superheated Steam. Thermodynamic relations show that the flow of superheated steam is inversely proportional to the square root of the specific volume,* so that from the author's equation for the flow of superheated steam (5) the following formula for the specific volume is easily obtained:

$$\mathbf{v}_s = (1 + .00065\ \mathbf{D})^2 \mathbf{v}, \qquad (6)$$

* This relation is discussed by the author in *Mechanical Engineer* (London), vol. XX, page 277, and in the *Harvard Engineering Journal*, vol. VI, No. 2, page 36. Compare with Stodola, *Die Dampfturbinen*, 3rd ed., page 9.

where v_s is the volume in cubic feet of one pound of superheated steam, v is the volume in cubic feet of one pound of dry saturated steam at the same pressure as for v_s, and **D** is the superheat in Fahrenheit degrees.

Flow of Steam when the Final Pressure is more than .58 of the Initial Pressure. For this case the discharge depends upon the final pressure as well as upon the initial. No satisfactory formula can be given in simple terms, and the flow is most easily calculated with the aid of the curve in **Fig. 16** due to Rateau. This curve

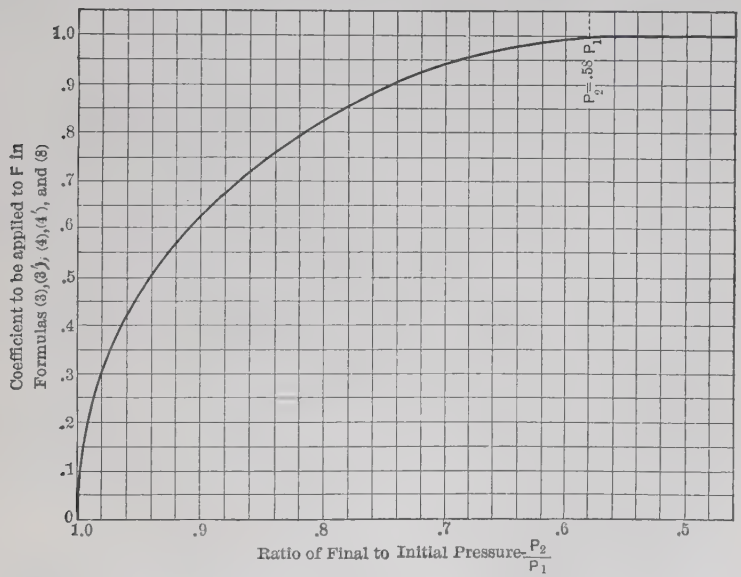

FIG. 16. Coefficients of the Discharge of Steam when the Final Pressure is Greater than .58 of the Initial Pressure.

is used by determining first the ratio of the final to the initial pressure $\frac{P_2}{P_1}$, and reading from the curve the corresponding coefficient showing the ratio of the required discharge to that calculated for the given conditions by either of the equations (3) or (4). The coefficient from the curve times the flow calculated from equations (3) or (4) is the required result. Obviously the

discharge for this condition is always **less** than the discharge when the final pressure is equal to or less than .58 of the initial.

The actual design of the nozzles for a commercial turbine will be taken up in the next paragraph; but before this is done, one other equation used almost continually in nozzle and blade designs must be explained. It is to find the **quality of the steam after an adiabatic expansion.** The initial quality of the steam is usually determined by the conditions in the boiler equipment, or is given in the engineer's specifications for a new design, but the quality of the steam after each expansion must be calculated. The general equation for adiabatic flow (constant entropy *) is

$$\frac{x_1 r_1}{T_1} + \theta_1 = \frac{x_2 r_2}{T_2} + \theta_2,$$

and solving,

$$x_2 = \left[\frac{x_1 r_1}{T_1} + \theta_1 - \theta_2\right] \frac{T_2}{r_2}, \qquad (7)$$

where the **subscript 1** attached to the symbols **refers to the initial condition, and the subscript 2 to the final.** The terms θ_1 and θ_2 are the entropies of the liquid (water) at the initial and final conditions, and the other symbols are used as before.

To avoid the laborious calculation of equation (7) to determine the quality after adiabatic expansion, **curves of steam quality** have been calculated and plotted on the **entropy-total heat chart** in the appendix. To illustrate the use of these curves an example is given below.

Example. Steam at 165 pounds per square inch absolute pressure (P_1), which is 4 per cent. wet ($x_1 = .96$), is expanded adiabatically in a nozzle to 15 pounds per square inch absolute (P_2). What is the quality after expansion?

Method. A point is first located on the chart where the quality curve for $x = .96$ crosses the pressure line for 165 pounds as shown diagrammatically in **Fig. 17.** A **horizontal** line of constant entropy drawn through this point shows at its intersection with the pressure line for 15 pounds the quality after expansion. In

* See footnote on page 17.

this case the quality is .837. For practical designing to get satisfactory results the quality should be read to three significant figures.

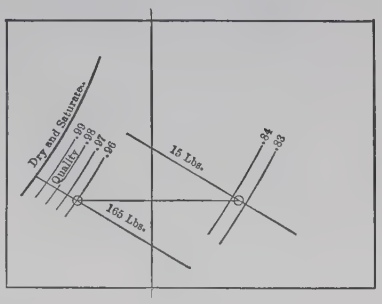

FIG. 17. Illustrates the Use of the Entropy-Total Heat Chart to Determine the Quality of Steam after Expansion.

Nozzle Calculations. In the calculations to determine the dimensions of a nozzle it is necessary to have given the following data:

(1) the weight of steam that is to be delivered through the nozzle to develop the required power in the turbine.

(2) the initial and final pressure (P_1 and P_2).

(3) the quality (x_1) of the steam supplied.

With these data A_0 is then calculated by substitution of these quantities in equation (4′). This is the area at the smallest section or **throat** as shown in **Fig. 18.**

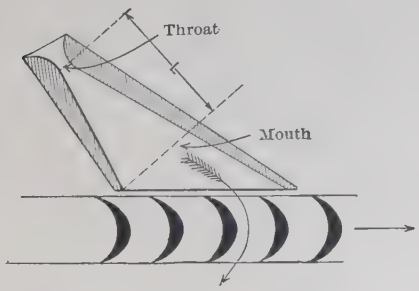

FIG. 18. A Typical Expanding Nozzle.

The area of the nozzle can be determined by simple calculations only at the **smallest section or throat.** To determine the area at any other section of the expanding portion between the throat and the mouth involves equations of the form of those at the bottom of page 38. It is therefore convenient to determine the sections other than the throat by a proportional method. Now the areas of different sections depend on the following three conditions:

(1) the velocity of the steam.

(2) the specific volume.

(3) the quality or dryness.

The essential condition to observe is that the weight of steam

flowing per second is the same at every section; and **for the same flow the areas are inversely proportional to the velocities** at any two sections compared, and **directly proportional to both the specific volumes and the qualities.** We may then write the equation

$$\frac{A_x}{A_0} = \frac{V_0}{V_x} \times \frac{v_x}{v_0} \times \frac{x_x}{x_0}, \qquad (8)$$

A_0 = area of nozzle at the smallest section in square inches.
A_x = area of nozzle at any section of expanding portion in square inches.
V_0 = velocity of steam at the smallest section in feet per second.*
V_x = velocity of steam at any section in feet per second.*
v_0 = specific volume at the smallest section in cubic feet per pound.
v_x = specific volume at any section in cubic feet per pound.
x_0 = quality of steam at the smallest section.
x_x = quality of steam at any section.

The product $\frac{V_0}{V_x} \times \frac{v_x}{v_0} \times \frac{x_x}{x_0}$ when calculated for the largest section or mouth is often called the **expansion ratio** (see **Fig. 21,** page 50), and is very nearly proportional to the ratio of the initial to the final pressure.

An example will now be given to show how the actual area of the nozzles of a commercial turbine can be calculated.

Example. A test of a De Laval turbine was as follows:

Pressure in the steam-chest (P_1) 211.5 pounds absolute
Vacuum referred to 30-in. barometer . . 26.6 in. mercury
Moisture in steam . . . . . 2.2 per cent.
Brake horsepower 333
Steam consumption, per brake horsepower-hour as weighed ("wet") . . . . . 15.51 pounds
Number of nozzles open 8

* Since practically all the loss in a nozzle occurs before the steam "emerges" from the throat, the same coefficient applies to both V_0 and V_x and cancels when expressed in equation (8). The non-expanding nozzles shown on page 60 are no more efficient than equally well made expanding nozzles.

In this case P_2 is given as 26.6 inches vacuum, which is less than 2 pounds absolute pressure, and is therefore less than .58 P_1 and formula (4′) is applicable, so that the "throat" area of the eight nozzles is expressed by

$$A_0 = \frac{60\,F\sqrt{x_1}}{P_1^{.97}},$$

where $x_1 = .978$, $P_1 = 211.5$ pounds per square inch absolute, and

$$F = \frac{333 \times 15.51}{3600} = \frac{5165}{3600} \text{ pounds wet steam per second.}$$

$$A_0 = \frac{60}{(211.5)^{.97}} \times \frac{5165}{3600} \times \sqrt{.978}.$$

$$A_0 = .333 \times \frac{5165}{3600} \times .989 = .472 \text{ square inches.}$$

The **area of the throat of each nozzle is therefore .0590 square inches.**

The value of $\frac{60}{(211.5)^{.97}}$ was read from the curve * of $\frac{60}{P_1^{.97}}$ in **Fig. 19.**

The nozzles of most commercial types of steam turbines are made with straight sides as shown in **Fig. 18,** so that in addition to the area at the throat only one other area must be found to fully determine the expanding portion. This is obviously most easily determined at the mouth, since the velocity must be calculated from the available energy for an adiabatic expansion from $P_1 = 211.5$ pounds per square inch absolute to $P_2 = 1.67$ pounds per square inch absolute (26.6 inches vacuum). This available energy can be calculated by equation (1′) for initially wet steam, but the calculation is laborious, and instead the **energy will now be read from the entropy-total heat chart** in the appendix. The point is first located on the chart where the line for 211.5 pounds pressure crosses the .978 steam quality line (estimated). Reading the scale of abscissas at this point we find that the total heat energy in a pound of steam at this condition is 1181 B.T.U. By

* The curve was made in this form to make the final form of the result more convenient for slide-rule or cancellation calculations.

following a horizontal line from this point across the chart as indicated diagrammatically in **Fig. 20** till it intersects the pressure line corresponding to 1.67 pounds (estimated), the total heat energy escaping with the exhaust steam after adiabatic expansion as read on the scale of abscissas is 874 B.T.U. The difference between the two readings, or 307 B.T.U., is the **available energy** ($\mathbf{E}_{aw}$). The **quality at the end of expansion** ($\mathbf{x}_2$) **as read from the curves is .767.** In this way the labor of calculating x_2 is saved.

From the value of the available energy due to expansion, E_{aw}, the velocity V_2 at the mouth of the nozzle is calculated by equation (**2**), or

$$V_2 = 223.7\sqrt{E_{aw}} = 223.7\sqrt{307} = 3919 \text{ feet per second.}$$

In order to determine the ratio of the area at the mouth of the nozzle (A_2) to that at the **smallest section** (A_0) by equation (**8**) the velocity (V_0) and the quality (x_0) * must be determined. These evaluations are most easily made in the same way as for V_2 and x_2 by means of the entropy-total heat chart. Now the available energy E_{a0}, corresponding to the velocity V_0, must be calculated for adiabatic expansion from $P_1 = 211.5$ pounds and $x_1 = .978$ to $P_0 = .58\ P_1$ † $= 122.7$ pounds. This available energy is 44 B.T.U. and x_0 is .939. The velocity V_0 is, therefore, $223.7\sqrt{E_{a0}} = 223.7\sqrt{44} = 1483$ feet per second.‡

* For **steam initially dry and saturated, the quality after adiabatic expansion** ($\mathbf{x}_2$) for all practical cases is very nearly expressed, empirically, by the equation

$$x_2 = \left(\frac{P_2}{P_1}\right)^{.055},$$

and the quality at the throat (x_0) may be taken as .965 for all practical cases regardless of the initial and final pressures.

† It is well established by thermodynamic calculations and by actual experiment that the pressure P_0 at the *smallest section* of a nozzle is always very nearly .58 of the initial pressure (P_1).

‡ Very elaborate curves of the velocities resulting from the adiabatic expansion of dry saturated steam have been prepared and published in some American books. Considering the several stages in nearly all types of turbines, such curves can be of very little use to practical men, because the condition that the steam admitted to the nozzles is dry and saturated occurs infrequently. That some of the authors neglected to mark the curves "for steam initially dry and saturated" deserves severe criticism. The curves, as given, are very misleading, as they are apparently intended for general application for all qualities and superheats.

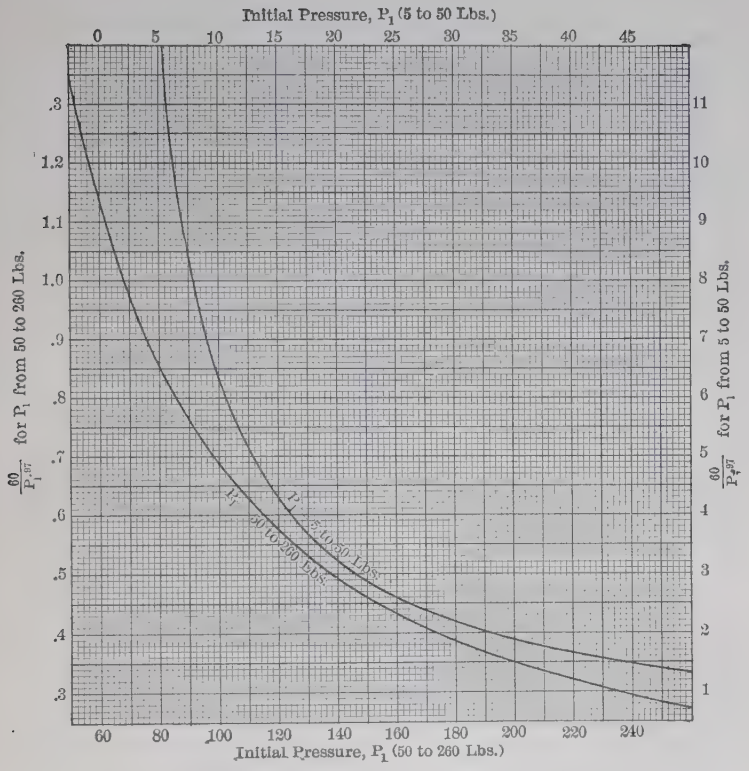

FIG. 19. Curves Showing Values of $\frac{60}{P_1^{.97}}$

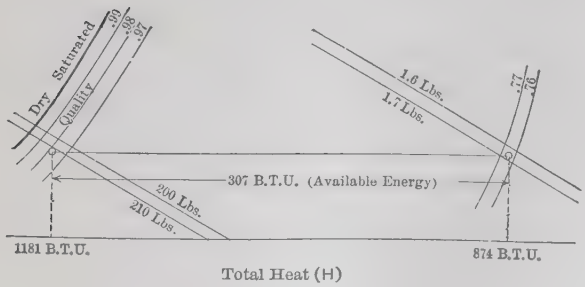

FIG. 20. Illustrates the Use of the Entropy-Total Heat Chart for Determining the Available Energy in a Pound of Steam.

In addition to the values already obtained it is only necessary to get v_0 and v_1 (the **specific volumes of dry saturated steam** at the corresponding pressures P_0 and P_1) to determine all the terms in the equation for the expansion ratio as already given, and **putting now the subscript 2 for x in equation** (8) to express the conditions corresponding to the pressure P_2; then

$$\frac{A_2}{A_0} = \frac{V_0}{V_2} \times \frac{v_2}{v_0} \times \frac{x_2}{x_0}, \qquad (8')$$

or

$$A_2 = \frac{1483}{3919} \times \frac{206.0}{3.642} \times \frac{.767}{.939} \times .0590 = 1.03 \text{ square inches (area at mouth).}$$

Method of Checking Nozzle Areas. Another and rather rapid method of calculating the area at the mouth of a steam turbine nozzle is by the use of charts with co-ordinates of total heat in B.t.u. per pound and absolute pressure in pounds per square inch, having a series of curves for varying values of specific volume in cubic feet per pound. A chart of this kind is included with Marks and Davis' Steam Tables. The available heat of an adiabatic expansion is determined in the same way as in the preceding calculations, and from these data the velocities of the steam are calculated. For example, in a chart showing by a series of curves the values of specific volume it will be found that at the intersection of the line of total heat of 874 B.t.u. per pound with the absolute pressure line of 1.67 pounds per square inch, the steam has a specific volume of 156 cubic feet per pound. From the data already given, the discharge of steam through the nozzle per second is 5165 ÷ 3600 or 1.432 pounds per second.

The area of the mouth of the nozzle can then be calculated, knowing that weight of steam in pounds per second (W) × specific volume in cubic feet per pound (v) = area of nozzle at mouth in square feet (A_2) × velocity in feet per second (V); or

$$W \times v = A_2 \times V$$

$$A_2 = \frac{W \times v \times 144}{V} \text{ (sq. in.)}$$

In this case, $A_2 = \frac{1.432 \times 156 \times 144}{3919} = 8.25$ sq. in. for 8 nozzles, or 1.03 sq. in. for each nozzle.

The author has found as the result of some investigations regarding the design of nozzles that the **expansion ratio** $\left(\frac{A_2}{A_0}\right)$ of a properly designed nozzle is very **nearly proportional to the ratio of the initial pressure** (P_1) **to the final pressure** (P_2). The curve shown in **Fig. 21** has been calculated on this basis for widely different conditions but for rather small expansions, and has been found to be accurate enough for practical purposes in designing turbines of more than one stage.* A similar curve is now being used by the nozzle designers of one of the large manufacturing companies. After the relations shown by **Fig. 21** had been worked out, it was found that Zeuner had arrived at a similar result mathematically after making certain assumptions;† but Zeuner's equation itself is practically useless on account of being too complicated.‡

Shapes of Expanding Nozzles. The inside walls of the expanding portion of the nozzle are usually surfaces with straight-line

* When P_2 is greater than 0.58 P_1 the expansion $\frac{A_2}{A_0}$ is unity.

† In Zeuner's *Theorie der Turbinen*, page 270, the following equation is given to express the ratio of the area at the mouth to that at the smallest section (expansion ratio):

$$\frac{A_2}{A_0} = \frac{.1550}{\sqrt{\left(\frac{P_2}{P_1}\right)^{1.762} - \left(\frac{P_2}{P_1}\right)^{1.881}}},$$

where the terms A and P are used as in the equations above. There is probably some error in Zeuner's assumptions, because actually values of $\frac{x_2}{x_0}$ are not quite constant for varying values of $\frac{P_2}{P_1}$.

‡ The author's curve in Fig. 21 is expressed by,

$$\frac{A_2}{A_0} = .172\left(\frac{P_1}{P_2}\right) + .70.$$

A more accurate form *for pressure ratios greater than* 25 is the following:

$$\frac{A_2}{A_0} = .175\left(\frac{P_1}{P_2}\right)^{.94} + .70.$$

elements, meaning that in any **section of the nozzle along the axis,** like Fig. 18, the inner walls are shown by straight lines. Parenty has shown that, for the highest efficiency, theoretically, such a section along the axis should be slightly elliptical with

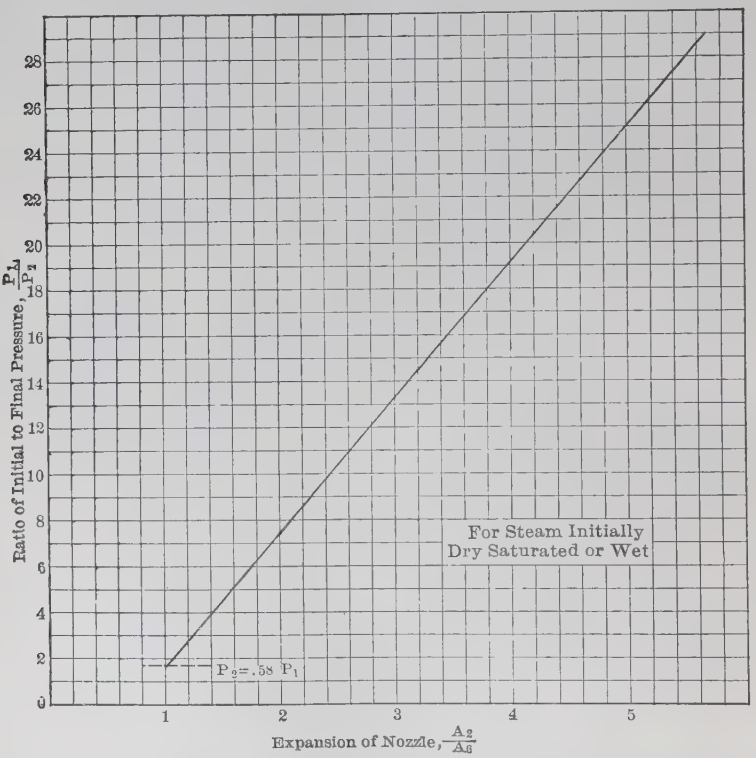

FIG. 21. Curve Showing the Approximate Relation between Expansion Ratio of a Nozzle and the Ratio of the Initial to the Final Pressure.

the focus in the throat, but practically this shape shows no advantage and is much too difficult to construct. For making nozzles like those in Curtis turbines, when the work is done largely with hand tools, the construction of even the simplest form is very expensive and the cost of an elliptical curvature is practically prohibitive. The shape to give the best expansion curve has

been the subject of investigation by various experimenters.* As the practical results are particularly interesting, it may be well to describe briefly a typical form of apparatus usually employed in these experiments as shown in **Fig. 22.** The **nozzle to be tested** is marked **A** in the figure. The steam entering the passage **B** discharges through the nozzle directly into the ex-

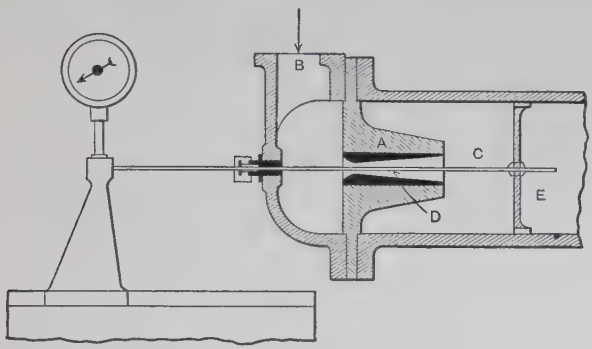

FIG. 22. Searching Tube Apparatus for Determining the Pressures in Nozzles.

haust pipe **E**. A small **" searching " tube, C,** is provided which is sealed at one end and has a very **small hole, D,** a short distance from this end. The other end of the tube is attached to a mercury column or pressure gauge. Suitable means are provided for sliding the " searching " tube with its pressure gauge back and forth so that pressures can be observed in different parts of the nozzle, corresponding to the position of the hole *D*. From these observations a curve of pressures may be made, and from this, together with the data of the weight of steam passing per unit of time, a second curve may be developed showing the corresponding velocities. The curves in **Figs. 23, 24,** and **25** are examples of the results obtained by this method for three very different nozzles. The nozzle shown at the top of **Fig. 23** has

* The conditions of pressure and velocity of steam inside a nozzle are discussed very completely from the mathematician's viewpoint in *Die Dampfturbinen* by Stodola, 3rd edition, pages 42 to 75.

curved lines, nearly elliptical, for its inside walls. A pressure curve is shown beneath the section drawing, in its true relative position corresponding to points along the axis of the nozzle. Theoretically this shape of nozzle approaches the ideal for an adiabatic expansion.* Practical conditions, however, as stated before, make the nozzle shown in **Fig. 24** with expanding straight-line walls preferable if the throat and mouth areas are properly designed. Fig. 24, however, is intended to show primarily the effect of using a nozzle for non-condensing service, which was designed to be used condensing. For this reason the expansion in the nozzle is greater than it should be for the pressures with which it is operating; and for this reason the pressure inside the nozzle, as illustrated by the curve, falls below the exhaust pressure.

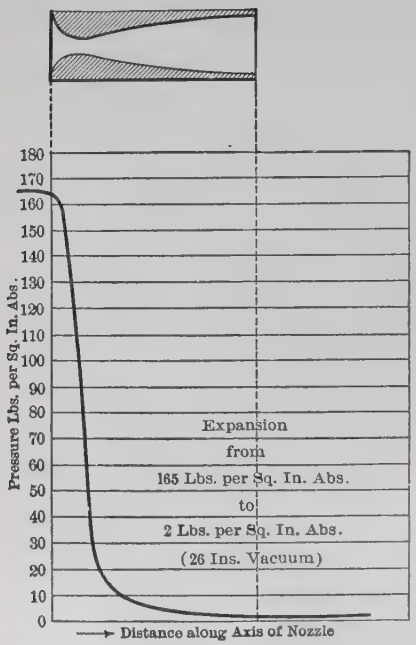

FIG. 23. Expansion Curve of a Nozzle with an Elliptical Axial Section.

* A nozzle with a circular section (perpendicular to the axis) has less surface exposed to the flow of steam than a nozzle of any other form of the same length and expansion. For this reason this form should give minimum friction losses. In practice, however, this type is not often used when the section at the mouth of the nozzle is made rectangular, at least when the nozzles are arranged in groups with the mouths of the several nozzles close together. There are obvious advantages from this last construction, as first pointed out by Professor Riedler, because if the nozzle mouths are made rectangular and close together a long continuous "band" of steam is secured which is approximately homogeneous and of constant velocity. The flow from the end nozzles is, of course, affected by excessive eddying and other irregularities just as single nozzles. Efficiency of the end nozzles is therefore considerably less than that of any of the others in the group.

This is called **over-expansion** or **"over-compounding"** and is always accompanied by a loss in efficiency. In fact, as will be shown again later, the effect of over-expansion, or making a nozzle too large at the mouth, reduces nozzle efficiency much more than if it is made the same percentage too small. (See Fig. 28.) The curves in Fig. 24 show that the pressure at the mouth is a little lower than the atmospheric exhaust, and a partial vacuum is thus secured at the blades opposite the nozzles. When such nozzles are operated non-condensing there is some gain from the reduction of disk and blade friction because the wheel and blades revolve in a less dense medium; but when considering also the increased losses in the nozzle itself because of over-expansion, there is certainly no net gain over having a nozzle designed exactly for the expansion corresponding to the operating conditions.

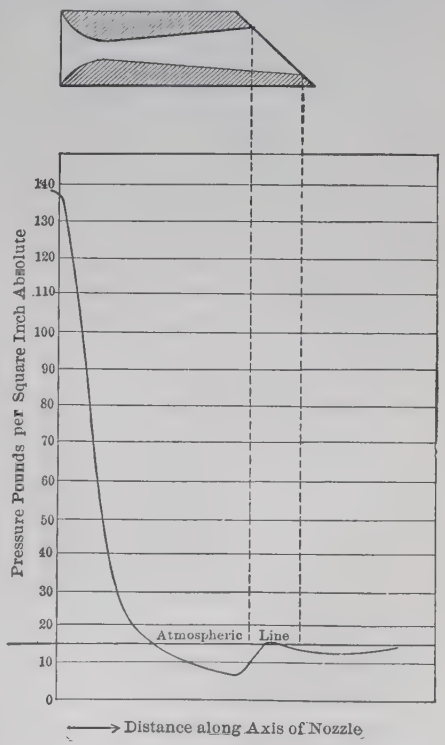

FIG. 24. Expansion Curve of a Nozzle with Straight Walls.

Fig. 25 is intended to show an abnormal but interesting form of nozzle which gives some idea of the behavior of steam **when the expansion is not gradual and continuous.** It was argued by a designer who made this nozzle that this form should be as efficient as any other. It was his theory that if the areas at the throat and at the mouth were of the right size, the shape of the walls

between was of no consequence, and, in fact, that the steam of itself would take the correct passage. Thus by preventing the steam particles from touching the walls the friction losses in the nozzle should be reduced. It will be observed, however, from the curve in the figure determined from some experiments with this nozzle that the pressure first drops abruptly in the throat to .58 of the initial, as in any other nozzle, and then forms a series of waves, from which it appears that the particles of steam strike the walls and rebound, to **meet** again **at a point,** as at **A,** where an increased pressure is produced, and so on till the mouth is reached. The probable path of the steam is shown by the dotted lines in the drawing of the nozzle. These experiments show therefore that the **steam will not take the correct passage through a nozzle without the provision of properly designed walls of gradually increasing area corresponding to the expansion required.** The importance of careful workmanship in the manufacture of nozzles is therefore obvious.

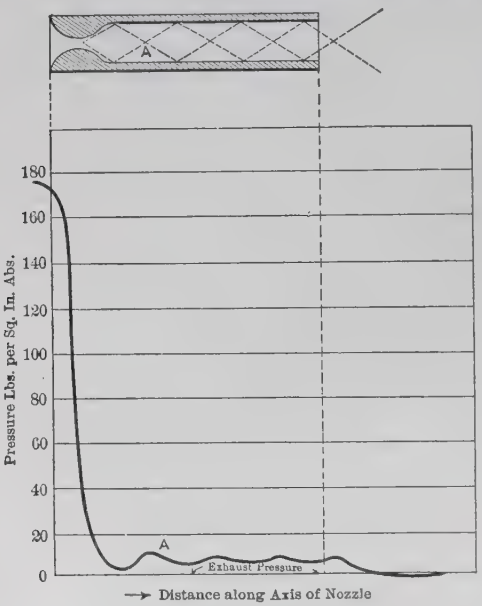

FIG. 25. Expansion Curve in an Abnormal Nozzle.

The results shown by **Fig. 25** bring up naturally the discussion of the proper length for a nozzle, as the one in this figure was obviously much too long.

Probably the best designers of the Curtis types of turbines make the length of the nozzle depend only on the initial pressure. In other words, the length of a nozzle for 150 pounds per square

inch initial pressure is usually made the same for a given type regardless of the final pressure. And if it happens that there is crowding for space, one or more of the nozzles is sometimes made a little shorter than the others.

Designers of De Laval nozzles follow practically the same "elastic" method. The divergence of the walls of non-condensing nozzles is about 3 degrees from the axis of the nozzle, and condensing nozzles for high vacuums may have a divergence of as much as 6 degrees* for the normal rated pressures of the turbine. The total angle of divergence, therefore, varies from six to twelve degrees.

The author has used successfully the following formula to determine a suitable length, **L,** of the nozzle between the throat and the mouth (in inches):

$$\mathbf{L} = \sqrt{15\,A_0}, \qquad (9)$$

where A_0 is the area at the throat in square inches.

The design of the nozzle calculated in the example on page 48 can now be completed with the determination of its proper length,

$$L = \sqrt{15 \times .059} = .9 \text{ inch.}$$

The important dimensions of **nozzles of circular section** suitable for the De Laval turbine mentioned on page 44 may be tabulated as follows:

Area at throat (A_0), .0590 square inch. Diameter (D_0), .274 inch.

Area at mouth (A_2), 1.03 square inches. Diameter (D_2), 1.13 inches.

Length of nozzle (L) as determined by equation (9), .9 inch.

* According to Dr. O. Recke, if the total divergence of a nozzle is more than 6 degrees, eddies will *begin* to form in the jet. There is no doubt that a too rapid divergence produces a velocity loss.

When a number of nozzles intended for different initial pressures are supplied for use in the same turbine, the length as determined by the taper is usually made to correspond to the pressure that is to be most used. Inspection of the De Laval nozzle in Fig. 15 shows that it is necessary to make all the nozzles of this design of the same length for a given size of turbine, so that the nozzles may be interchanged.

Length of nozzle assuming a divergence of 12 degrees, 1.9 inches.

It will be observed from the last calculation that a designer of De Laval nozzles would make the length about twice that calculated by equation (9). The nozzles of De Laval turbines are made unusually long largely for mechanical reasons. There is probably very little loss in this additional length.

A nozzle of circular section suitable for these conditions is shown at the top of page 33 (Fig. 15). It will be observed that a rounded entrance to the nozzle has been made. If a well-rounded entrance is not provided the rate of flow through the nozzle may be only 50 to 70 per cent. (depending of course on the sharpness of the corners) of the normal flow calculated from the two formulas given in equations (3) and (4). The efficiency is also very much reduced if the steam is not led to the throat along a surface of gradual curvature.

It has been shown by **Stodola's experiments** that the difference in pressure between the outer and inner portions of the jet inside a nozzle of approximately correct design are practically negligible. The conclusion is, therefore, that the jet always completely fills the nozzle, and that there is no "zonal formation," meaning an outer zone moving at a different velocity from the inner one, although there is certainly a considerable amount of frictional dragging of the steam at the surface. Obviously, of course, the statement does not hold for absurdly diverging forms of nozzles, and in such cases the steam leaves the walls with apparently much loss of velocity as in the example shown by Fig. 25.

Stodola observed also that in any nozzle the pressure usually falls in the vicinity of the throat to considerably less than the discharge pressure, with a sudden rise immediately after the fall. This effect is shown by pressure curves in **Fig. 26,** plotted from Stodola's data taken in a **divergent** nozzle like the one represented at the top of this figure. Similar effects, only more pronounced, observed in a straight non-expanding nozzle with rounded inlet are shown in **Fig. 27.**

Nozzle Efficiency. Jude states that there is a greater loss in velocity, due to oscillations or eddies, in a square or rectangular nozzle than in a circular one. Recent experience with nozzles of this type does not bear out this statement, except in the case probably of square or rectangular nozzles with no rounding at

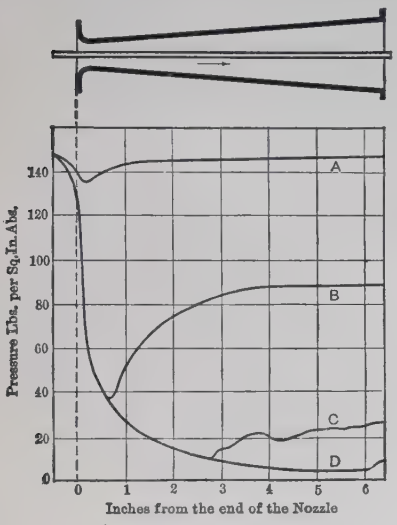

FIG. 26. Experiments with an Expanding Nozzle Showing the Effect of Varying the Final Pressure.

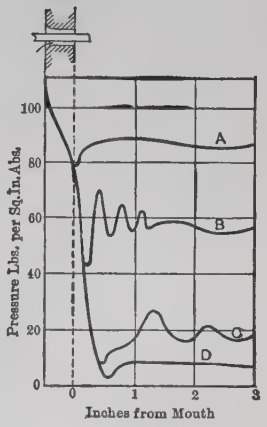

FIG. 27. Experiments with a Non-expanding Nozzle Showing the Effect of Varying the Final Pressure.

the edges. An efficiency of 97 per cent. is not unusual for properly designed square and rectangular shaped nozzles without any "square" edges; and circular nozzles have not given much higher efficiency.

Under- and Over-Expansion. The best efficiency of a nozzle is obtained when the expansion required is that for which the nozzle was designed, or when the **expansion ratio** for the condition of the steam corresponds with the ratio of the areas of the mouth and throat of the nozzle. A little **under-expansion** is far better, however, than the same amount of **over-expansion,** meaning that a nozzle that is too small for the required expansion is

more efficient than one that is correspondingly too large.* **Fig. 28** shows a curve representing values of nozzle loss obtained by the author from various American and European manufacturers* to determine discharge velocities from nozzles under the condi-

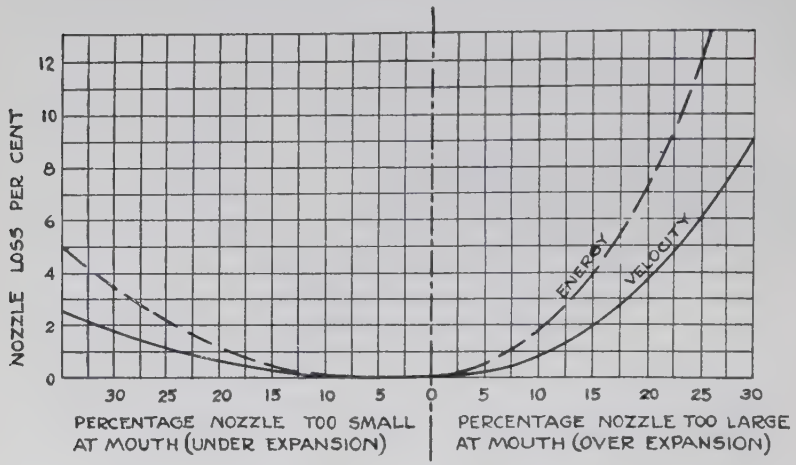

FIG. 28. Curve of Nozzle Loss.

tions of **under-** or **over-expansion.** This curve will be referred to again in connection with the design of blades.

Testing of Nozzles. A number of methods have been used to determine the losses in the nozzles of steam turbines. In one kind of apparatus for this purpose, the velocity of the steam through the nozzle is measured by means of a Pitot tube at a large number of " stations " in the cross section of the nozzle. A more reliable method, however, is to use an apparatus similar

* It is a very good method, and one often adopted, to design nozzles so that at the rated capacity the nozzles under-expand at least 10 per cent, and maybe 20 per cent. The loss for these conditions is insignificant, and the nozzles can be run for a large overload (with increased pressures) in nearly all types without immediately reducing the efficiency very much. This applies especially to turbines governed by cutting out nozzles in the first stage (see page 305) and with no control of the nozzles in the other stages. Under-expansion due to a throttling governor is also an important condition affecting the efficiency of nozzles.

to that shown in Fig. 28a* in which the type of nozzle to be tested is supported flexibly so that the force of the reaction of the jet of steam discharging from the nozzle may be measured. From the data of the reaction force and the weight of the discharged steam, the actual velocity of the steam V (in feet per

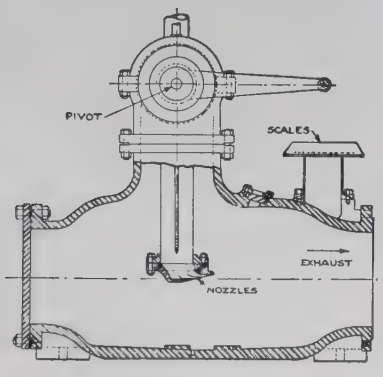

FIG. 28a. Nozzle Reaction Apparatus.

second) as it discharges from the nozzle can be calculated from the following equation:

$$V = \frac{F \times f}{W}$$

where F is the measured force of the impact due to the reaction of the nozzle in pounds; g is the acceleration due to gravity (32.2); and W is the weight of steam discharged in pounds per second.

Non-expanding Nozzles. All the nozzles of Rateau types and usually also those of the low-pressure stages of Curtis turbines are made non-expanding; meaning, that they have the same area at the throat as at the mouth. For such conditions it has been suggested that instead of a series of separate nozzles in a row a single long nozzle might be used of which the sides were arcs of circles corresponding to the inside and outside pitch diameters

* See investigations by Warren and Keenan, Trans. Amer. Soc. Mech. Eng., vol. 48 (1926).

of the blades. Advantages would be secured both on account of cheapness of construction and because a large amount of friction against the sides of nozzles would be eliminated by omitting a number of nozzle walls. Such a construction has not proved desirable, because by this method no well-formed jets are secured and the loss from eddies is excessive. The general statement may be made that the **throat** of a well-designed nozzle should have a nearly symmetrical shape, as for example a circle, a square, etc., rather than such shapes as ellipses and long rectangles. The shape of the mouth is not important. In Curtis turbines an approximately rectangular mouth is used because the nozzles are placed close together (usually in a nozzle plate like Fig. 114) in order to produce a continuous band of steam; and, of course, by using a section that is rectangular rather than circular or elliptical, a band of steam of more nearly uniform velocity and density is secured.

Fig. 29 shows a number of designs of non-expanding nozzles used by Professor Rateau. The length of such nozzles beyond the throat is practically negligible. Curtis non-expanding noz-

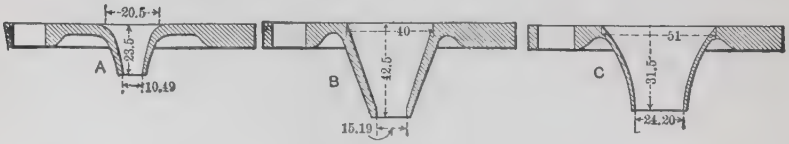

Fig. 29. Rateau Non-expanding Nozzles.

zles are usually made the same length as if expanding and the length is determined by the throat area.

Materials for Nozzles. Nozzles for saturated or slightly superheated steam are usually made of cast bronze or brass. Gun metal, zinc alloys, and delta metal are also used. All these metals have unusual resistance for erosion or corrosion from the use of wet steam. Because of this property as well as for the reason that they are easily worked with hand tools* they are very suitable materials for the manufacture of steam turbine nozzles. Superheated steam, however, rapidly erodes all these alloys and

* Nozzles of irregular shapes are usually filed by hand to the exact size.

also greatly reduces the tensile strength. For nozzles to be used with highly superheated steam, cast iron is generally used, and except that it corrodes so readily is a very satisfactory material. Commercial copper (about 98 per cent.) is said to have been used with a fair degree of success with high superheats; but for such conditions its tensile strength is very low. Steel and cupro-nickel (8 Cu + 2 Ni) are also suitable materials, and the latter has the advantage of being practically non-corrodible.

CHAPTER IV.

STEAM TURBINE TYPES AND BLADE DESIGN.

ALL the types of both water and steam turbines are commonly divided into two general classes, designated by the descriptive terms **impulse** and **reaction.** Without further explanation, these terms, as they are used in turbine practice, would be very misleading, because practically all commercial types of steam turbines operate by both the impulse and the reaction of steam. Long usage, however, has determined the accepted meaning of these terms and it is useless now to try to change them. Briefly, the

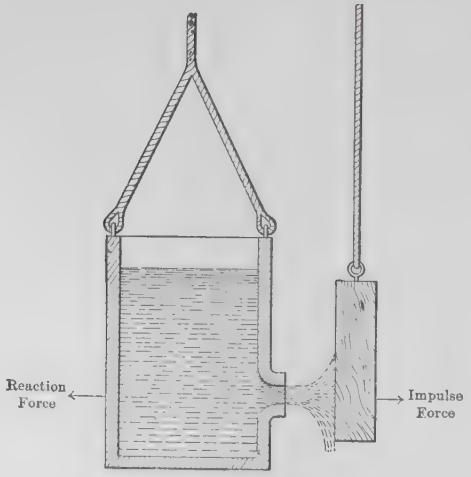

FIG. 33. Impulse of a Jet Exerted on a Flat Surface.

physical phenomena known as impulse and reaction will first be described, to be followed by an explanation of the technical significance of these terms as they are used by engineers.

In all important commercial types of steam turbines the blades

are moved by both the impulse and the reaction of impinging steam jets issuing from nozzles (see **Fig. 2**) or passages essentially equivalent to nozzles. According to the older school of scientists, who have handed down to us the classification of turbines mentioned above, an impulse is a force acting in a " forward " direction, and a reaction is a " backward " force, relative to the impulse and equal to it in magnitude. **Fig. 33** is a simple concrete **illustration of both impulse and reaction.** A suspended tank filled with water is shown from which a jet issues through a nozzle and impinges upon a flat board hung opposite. As the

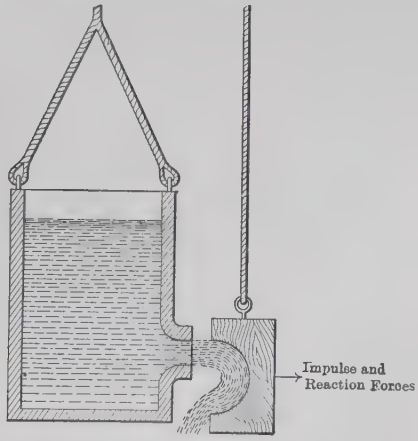

FIG. 34. **Impulse of a Jet Exerted on a Curved Surface.**

result of the pressure due to the jet, the board will obviously move to the right. As the jet issues from the nozzle **it exerts at the same time a reaction on the tank** causing it to move to the left.*

* The pressure on the walls of a tank at any point depends on the height of the water above that point ("the head") and upon the density of the fluid. When a fluid escapes from an opening in the tank there is no resistance at that point to pressure, and the *unbalanced force* exerted on the walls directly opposite will tend to move the tank in the direction opposite to that of the escaping jet. The greater the "head" and the density the greater will be the velocity of the issuing fluid and the reaction on the tank. This explanation of reaction is given here merely to show the " nature " of the phenomenon which physicists call " reaction." Many engineers think it best to regard as reaction only the force developed as a consequence of the generation of velocity at the expense of pressure in the *moving* element.

Fig. 34 is intended to show the significance of impulse and reaction as they are used in regard to turbines. In this case water from the tank impinges against the curved surface of a wooden block, and before it leaves this surface **it is turned back upon itself through an angle of 180 degrees.** The block is therefore acted on by two forces simultaneously, both tending to move it to the right. When the jet first strikes the surface of the block

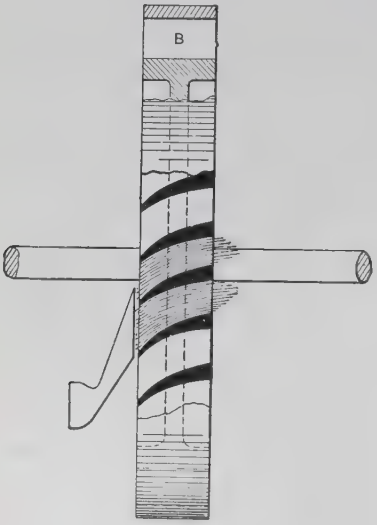

FIG. 35. Impulse Wheel with Blades of "Single Curvature."

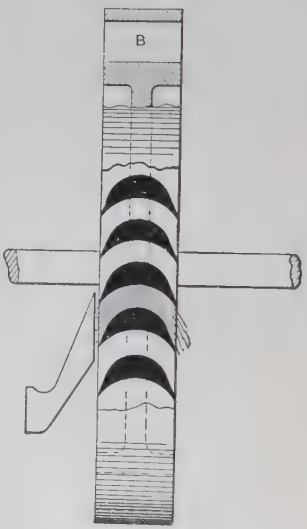

FIG. 36. Impulse Wheel with Blades of "Double Curvature."

an impulse force tends to move it, and when leaving, there is acting in a "backward" direction a reaction equal to the impulse. If the jets represented in the two figures have the same velocity and density, and frictional losses are neglected, the pressure on the block in Fig. 34 will be twice as great as on the board in Fig. 33.

Fig. 35 shows a nozzle and a blade wheel in which the blades have a "single curvature" as compared with the curved surface in Fig. 34; that is, the steam in its passage through the blades is not "turned back on itself," or in other words, the curvature of the blades is less than 90 degrees. If this wheel were held

stationary so that the blades could not move, the steam would leave them in a direction nearly parallel to the shaft. The only force, therefore, that is effective for moving the blades is the impulse.

Fig. 36, on the other hand, shows blades with nearly 180 degrees curvature which turn the steam back on itself on leaving. The wheel is thus moved first by the impulse force of the steam exerted on the blades in the direction of flow, and then by its reaction. A blade turning the steam through less than 90 degrees like the one in Fig. 35 will exert only about half as much pressure as one turning the steam through nearly 180 degrees like the one in Fig. 36.

A turbine wheel which would be called a **reaction type** is shown in **Fig. 37.** It differs from the one in Fig. 36 chiefly in the blade section **B,** shown at the top of the drawing. In this type the expansion of the steam in the nozzle is only partial, and the blades are made so that part of the expansion occurs in them. In the types shown in Figs. 35 and 36, on the other hand, all the expansion is in the nozzles, with no expansion at all in the blades.*

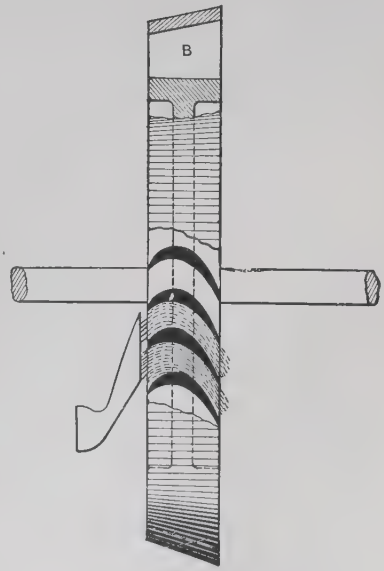

FIG. 37. Simple Reaction Wheel.

The amount of **expansion of the steam in the blades** marks, therefore, the essential **difference between the two important types of steam turbines** illustrated by Figs. 36 and 37. In **impulse turbines** there is no expansion in the blades, while in

* The turbine wheel illustrated in Fig. 37 is not, however, typical of commercial "reaction" types in which there are sometimes as many as 60 to 80 pressure stages.

reaction turbines " expanding " blades are used, with the result that some of the kinetic energy of the steam is changed to velocity in flowing through them.

From the explanation that has preceded it is obvious that both of the **types represented by the last two figures operate by both impulse and reaction.**

Impulse and Reaction of Fluids. The kinetic energy of a fluid jet discharging from a nozzle may be regarded as produced by a constant **impulse** force **I** acting upon a weight **W** of the fluid discharged for one second. During this second the velocity has changed from zero to **V** feet per second and has gone through a space of $\frac{1}{2}$ **V** feet. The work done by this force in producing the kinetic energy (**K** foot-pounds per second) is $\mathbf{I} \times \frac{\mathbf{V}}{2}$, which is equal to **K** or $\frac{\mathbf{WV}^2}{2\,\mathbf{g}}$.

We have then

$$\frac{\mathbf{IV}}{2} = \frac{\mathbf{WV}^2}{2\,\mathbf{g}},$$

$$\mathbf{I} = \frac{\mathbf{WV}}{\mathbf{g}}.$$

In practice the principal distinguishing feature of reaction turbines is the application of stationary blades for partially expanding the steam. The rest of the expansion takes place in the moving blades.

It is sometimes stated, although inaccurately, that the angles of the *moving* blades may be used as a criterion for distinguishing the two types. According to these authorities, the moving blades of impulse turbines are symmetrical like Fig. 36, and those of reaction turbines resemble in contour those of Fig. 37. In many cases the rule could probably be applied, but there are also many exceptions. There are some blades made for Curtis turbines which are not nearly symmetrical, and no one would call a Curtis turbine a reaction type.

The difference between impulse and reaction turbines can be very easily shown experimentally by putting a pressure gauge between the nozzle and the wheel. In the impulse type, because the expansion is completed in the nozzle, it will be found there is no drop in the pressure of the steam in passing through the blades; but in the reaction type the gauge will record a higher pressure than that in the casing.

As these words " impulse " and " reaction " are used at the present time there is really little connection between the usual meaning of the words and the ideas they are to convey in regard to steam turbines. Actually all commercial steam turbines work by impulse and by reaction. A German writer has used instead of " impulse " and " reaction " the more accurate words, " gleichdruck " and " ungleichdruck," meaning " equal pressure " and " unequ al pressure," which to the author seem much more appropriate.

In the first principles of physics it was learned that **impulse** and **reaction** were " equal and opposite," so that if the reaction is represented by **R** in pounds, then $\mathbf{R} = \mathbf{I} = \frac{WV}{g}$.

Example. If the vessel shown in **Fig. 33** discharges 10 pounds of water per second at a velocity of 322 feet per second, what is the force **I** (impulse) pushing the wooden block away from the vessel? *Ans.* 100 pounds.*

Also what is the force **R** (reaction) pushing the vessel itself toward the left? *Ans.* 100 pounds.

Example. If water is discharged against flat blades of a water wheel made up of vanes similar to the block shown in Fig. 33 at the rate of 32.2 pounds per second at a velocity of 200 feet per second and is spattered from the wooden blocks with a " residual " velocity (leaving the vanes) of 100 feet per second, what horsepower is this water wheel capable of developing?

Solution. Calling the " residual " velocity V_2 we have

$$K = \frac{W(V^2 - V_2^2)}{2g} = \frac{32.2(200^2 - 100^2)}{2 \times 32.2} = 15{,}000 \text{ ft.-lbs. per sec.,}$$

or $$\frac{15{,}000}{550} = 27.27 \text{ horsepower.}$$

The maximum theoretical horsepower of the wheel is $\frac{WV^2}{2g \times 550}$, if the water is discharged at zero velocity. We have (in this case) $\frac{32.2 \times 200^2}{2 \times 32.2 \times 550} = \frac{20{,}000}{550}$, or 36.36 h.p.

The efficiency of the (blades of this) water wheel is therefore

$$\frac{27.27}{36.36} = .75 \text{ or } 75 \text{ per cent.}$$

Example. Steam discharges from a nozzle at the rate of 3.542 pounds per second with a velocity of 4000 feet per second against the blades (like Fig. 44) of a steam turbine and leaves

* It is assumed that the water leaves the block with practically no velocity, that is, all the velocity is absorbed in producing the impulse force.

them with a velocity of 1000 feet per second. Neglecting frictional losses, what is the maximum horsepower that this turbine wheel can develop? Calculate the efficiency (in percentage) of the blades in this turbine. *Ans.* 1500 horsepower; 93.75 per cent.

Example. The steam discharging from the blades of the turbine wheel in the last exercise is finally directed upon the blades of a second turbine wheel. Assuming there has been no loss of velocity in passing from one turbine wheel to the other and that the steam leaves the second one at 100 feet per second, calculate the maximum horsepower that could be developed in this second turbine wheel and the efficiency of its blades.

Ans. 99 horsepower; 99 per cent.

Example. If we consider the two turbine wheels mentioned in the two preceding exercises as combined in a single turbine, what would be the total horsepower of the turbine and the over-all efficiency if frictional and other losses are neglected?

Ans. 1599 horsepower; 99.94 per cent.

Suggestion. The same result could have been obtained by calculating the total kinetic energy of the combined wheels, using $V = 4000$ feet per second, $V_2 = 100$ feet per second and $W = 3.542$ pounds of steam.

Example. Remembering that impulse and reaction are equal and opposite, what is the force of the reaction against the plate supporting the nozzle required to give a velocity of 4000 feet per second to a flow of 3.542 pounds of steam per second?

Ans. 440 pounds.

Suggestion. Reaction = impulse $(I) = \dfrac{WV}{g}$.

Example. The area of a nozzle is .322 square inch. How many pounds of steam per second having a density of .144 pound per cubic foot must be discharged from the nozzle in order to exert a pressure of 90 pounds against a plate suitably designed to turn away the steam with zero velocity? *Ans.* .966 pound.

Suggestion. In this case all the velocity is absorbed in producing the pressure (impulse) upon the plate.

Substituting the values given in the example and substituting in the equation for impulse, we have

$$W = \frac{.322 \times V \times .144}{144} = .000322\ V,$$

$$I = \frac{WV}{g} = \frac{.000322\ V^2}{32.2} = .00001\ V^2,$$

and since the impulse is 90 pounds, we have

$$.00001\ V^2 = 90 \text{ pounds}$$
$$V^2 = 9{,}000{,}000$$
$$V = 3000 \text{ feet per second.}$$

Substituting this value of V in the equation at the top of the page,

$$W = .000322 \times 3000 = .966 \text{ pound per second.}$$

Example. Steam of the same density as in the preceding exercise discharges at the rate of 3478 pounds per hour and produces a reaction against the plate into which the nozzle is inserted of 90 pounds. What is the velocity of discharge?

Ans. 3000 feet per second.

EXAMPLES OF IMPULSE TURBINES.

A simple impulse turbine is represented by diagrammatic drawings in **Fig. 38.** In the shaded drawings in this figure, " Section A " is made by a plane cutting one of the blades and passing through the center of the shaft. The other view, " Section B," shows a section made by a plane parallel to the shaft and passing through the center of one of the nozzles in the turbine. In the same figure, Curve I shows the decreasing pressures in the nozzle and the constant pressure through the blades. Curve II shows similarly the velocity changes. In the nozzle the steam velocity increases as the pressure falls, while in the blades the velocity of the steam is absorbed in moving the wheel. This simple impulse turbine represented by these diagrams is typical of the original and simplest De Laval type. (See pages 200 to 209.) These turbines have always a single set of nozzles and one row of blades.

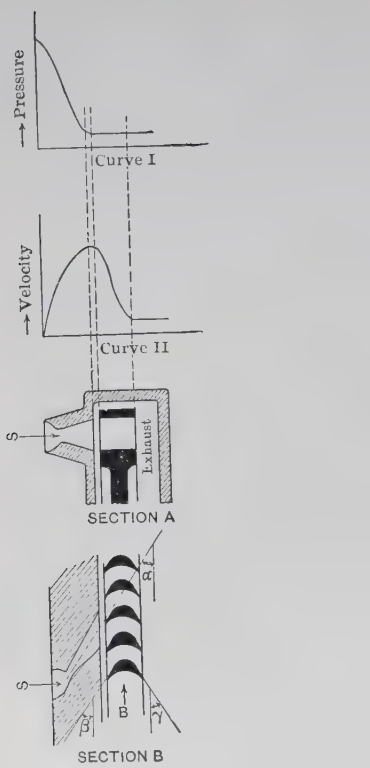

FIG. 38. Diagrams of a Single-stage Impulse Turbine.

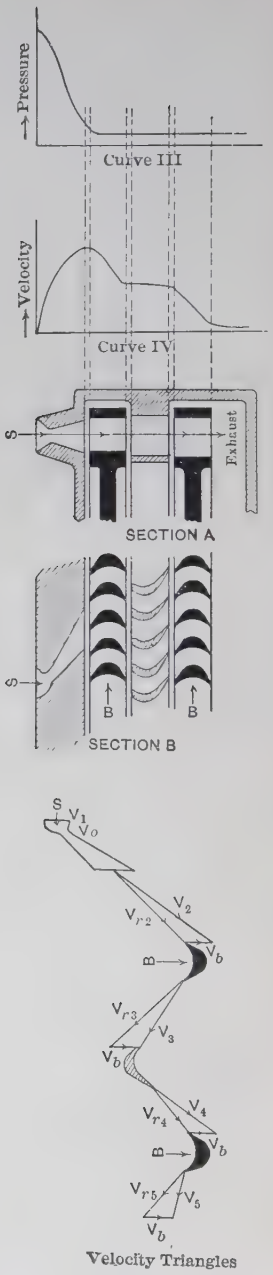

FIG. 39. Diagrams of an Impulse Turbine with Two Velocity Stages.

In Figs. 38, 39, 40, and 41 illustrating the important types of steam turbines, the direction of the flow of the steam is marked by the symbol $\backsim\!\!\rightarrow$ and the motion of the blades by $\varpi\!\!\rightarrow$. The moving blades are shown by solid black to distinguish them from the stationary blades, which are indicated by cross-hatching.

A modification of the simple impulse type is shown in **Fig. 39.** The drawings marked "Section A" and "Section B" show a turbine with two moving blade wheels and a set of **stationary "intermediate" blades.** The stationary blades are merely guides for changing the direction of the steam so that it will enter the second set of moving blades at a suitable angle. Two blade wheels are used instead of one in order to make it possible to use efficiently a lower peripheral speed for the moving blades. The reasons for this statement will be discussed in another part of this chapter. The curves at the top of the figure show, graphically, the relation between pressure and velocity. Curve III shows the sudden fall of pressure in the nozzle and the constant pressure through the three rows of blades. Curve IV shows first the rapid increase in velocity as the pressure falls, and then the gradual loss of velocity in the moving blades as it is given up in doing work. Velocities represented in Curves II and IV are drawn approximately to the same scale. A comparison shows that the reduction in velocity of the steam in the first wheel as represented in Curve IV is only about half that for the single wheel in Curve II. The arrangement of blades represented in Fig. 39 makes possible comparatively low blade speeds with initially high steam velocities. This method of increasing the number of rows of blades is often used with three rows of moving blades and two "intermediate" (stationary) rows; and even four rows of moving blades have been used. Not much advantage, however, has been shown from the use of the third and fourth rows of moving blades, and this construction has been generally abandoned. Turbines of this type are often spoken of as having **velocity stages,** the number of velocity stages being the same as the number of rows of moving blades.

The Curtis turbines, made by the General Electric Company,

are the best examples of the type illustrated by Fig. 39 with several rows of blades following a set of nozzles. In the latest designs of the larger sizes of these turbines there are two rows of moving blades and one set of " intermediate " blades for the first set of nozzles, so that the arrangement shown in Fig. 39 is typical in these designs.*

In **Fig. 40** another distinct type of steam turbine is illustrated. The left-hand half of this figure represents a single impulse wheel as in Fig. 38 and the right-hand half is practically a duplicate of that on the left. In this construction each of the halves — a single nozzle or set of nozzles with the blades following — is called a **pressure stage,** or very commonly it is called simply a **stage.** The difference between the operation of this turbine and the single impulse wheel in Fig. 38 is best shown by comparing the pressure and the velocity curves at the top of the two figures. In Curve I, showing the pressure for the single impulse wheel, the steam drops from the boiler pressure to that of the exhaust in a single nozzle, that is, in a single stage. In Curve V of Fig. 40 there is about equal reduction of pressure in each of the two nozzles, and the velocity change, as Curve VI shows, is about the same for each of the two stages. This figure represents, diagrammatically, a number of types that are more complex.

It should be mentioned here that there are often two or more groups of nozzles and blades, each like Fig. 38, in succession (cf. Fig. 113). Each of these groups is then called a **stage.** In

* The blades shown in "Section A" of Fig. 39 have the same height on the "entrance" and "exit" sides. It is, however, a very common practice to make the "exit" side of the "intermediate" blades of Curtis turbines a little higher than the "entrance" side so as to increase the cross-sectional area and thus allow for the lessened velocity, due to friction and eddies, and thereby prevent "choking" in the blades. There is therefore a little expansion in these blades.

In some makes of steam turbines, the inlet angle of the blade is made several degrees larger than that determined by the velocity diagram. This is done to permit the steam to enter without striking the rear of the blade as it would if the steam pressure falls slightly and steam velocity decreases. Less loss from shock results if steam strikes the face of the blade at a slight angle, than when it strikes the back of the blade. The former condition is called "over-speeding," and the latter "under-speeding" which is unsatisfactory.

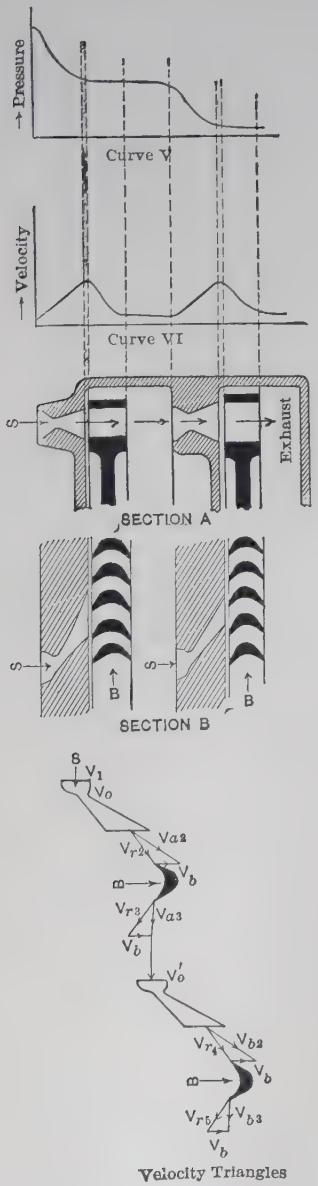

FIG. 40. Diagrams of an Impulse Turbine with Two Pressure Stages.

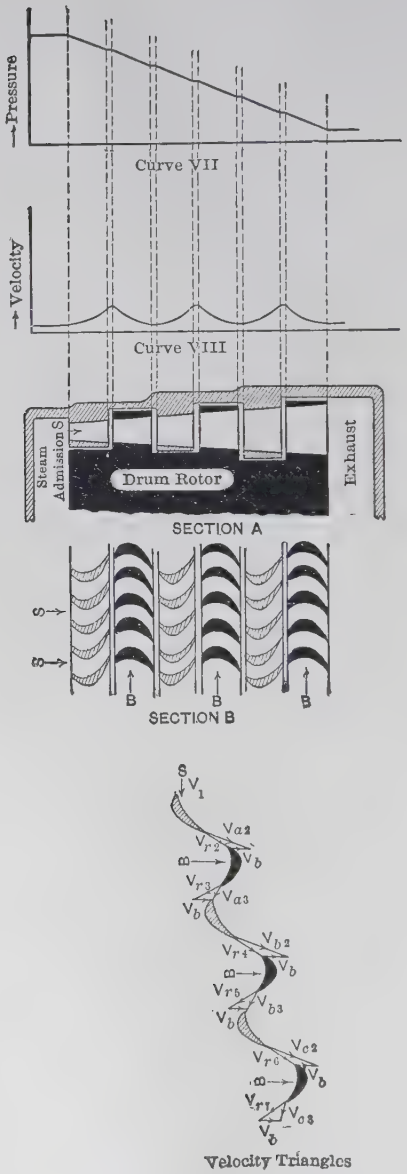

FIG. 41. Diagrams of a Three-stage Reaction Turbine.

other words, the first set of nozzles and all the rows of blades up to the next nozzle make the first stage, and so on. This last arrangement is typical of the Curtis turbines with more than one pressure stage and the various Rateau designs.

REACTION TURBINES.

The arrangement of blades in the well-known **Parsons turbine** is illustrated in **Fig. 41.** This is the **typical modern reaction turbine.** There are no nozzles. The steam flows from the boiler into the "admission space" of the turbine (see "Section A") with practically no velocity. From this space it enters the first set of stationary blades, where it expands and attains some velocity as the pressure drops. Curves VII and VIII show the change of velocity with change of pressure. When the steam leaves the fixed blades it enters immediately the first set of moving blades. Here it expands again; but at the same time some of the velocity from the expansion is taken away, or, in other words, the velocity is reduced in moving the blade wheels. The pressure and velocity curves show plainly what happens in turbines of this type as the steam passes alternately through the fixed and moving blades, expanding in every row till it escapes in the exhaust. There is here considerable expansion in the moving blades, and consequently because the pressure is not the same on both sides of these blades it is called a **reaction turbine.** All the other three types (Figs. 38–40) are impulse turbines, because the pressure is practically the same on both sides of the moving blades.

We should observe here that all the possible simple combinations have been mentioned except the case of expansion only in the moving blades and with no expansion in the stationary parts. Such an arrangement would be feasible but has probably never been used.

In a reaction turbine any two rows of blades, the first stationary and the second moving, make a pressure stage. In a Parsons reaction turbine there are sometimes nearly a hundred stages.

Graphical Diagrams of Steam Velocities. A velocity diagram representing graphically the steam velocities in the passages of each of four types of turbines shown in Figs. 38–41 is represented

at the bottom of each of these figures. These diagrams, in the shape of **velocity triangles,** are represented here with the nozzles and blades in their proper order. In practical designing, however, this pictorial effect is omitted and only the triangles are drawn. The lines of these triangles show by their lengths the magnitudes of the blade as well as the steam velocities in the turbine. As all of these triangles are drawn to the same scale, they show how different the velocities are in the four types. In each case the blade speed (V_b) is taken at about the value that has been found by experience to give the best efficiency. Such velocity diagrams are used by engineers for determining the best relation between the velocity of the blades and the velocity of the steam. In order to interpret such diagrams intelligently the significance of **absolute and relative velocities** * of the steam must be clearly

* This distinction between absolute and relative velocities should probably be made plainer for those who are unfamiliar with these terms. A thorough understanding of what is meant by absolute and relative velocities is very necessary to work intelligently with the velocity diagrams on which the whole theory of turbine practice depends. Suppose a train is just moving out of a station at the rate of 30 feet per second, and a man standing in the middle of the track behind the train throws a ball with a velocity of 40 feet per second through the back door of the last car. Then a passenger in the train will see the ball moving through the car at a velocity of only 10 feet per second. In this case the velocity of the ball, or 40 feet per second, is its absolute velocity with respect to bodies that are not moving, and 10 feet per second is the relative velocity of the ball in the train. In this connection a slightly different case should also be considered. Suppose now the ball is thrown upon a boat moving in a stream at a velocity of 30 feet per second by a man standing on the bank at P as represented in Fig. 42. Let us assume the absolute velocity, or the velocity with which the ball is thrown, as again 40 feet per second, but that now the path of the ball makes an angle of 20° with the direction of the moving boat. Then the relative velocity of the ball (V_r) with respect to the direction of the boat is shown graphically by a triangle of velocities ABC in the figure, where AC is the absolute velocity (V_1) of the ball, BC is the velocity of the boat (V_b), and AB is the **relative** velocity (V_r) of the ball with respect to that of the boat.

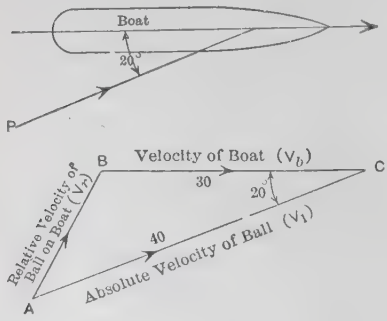

FIG. 42.

understood. An **absolute velocity** of a body is its velocity with respect to immovable points on the earth. A **relative velocity** is its velocity with respect to points that are also moving.

The direction of the line representing the velocity of the steam relatively to the blades should be such that the lines of flow of the steam enter the blade tangentially to the conventionally straight portion of the back * of the blade (see **Figs. 43, 49,** and **50**). If the backs of the blades are made to any other angle there will be losses due to **impact** and eddies.

EFFICIENCY OF THE BLADES OF IMPULSE TURBINES.

In the velocity diagram in Fig. 38, the initial velocity of the steam entering the nozzle is marked V_1, the velocity in the throat is V_0, and the **absolute velocity of the steam as it leaves the nozzle** and enters the blades is V_2, making an angle α with the direction of motion of the blades. The **velocity of the blades V_b, which is the peripheral velocity of the wheel,** produces a **" relative " velocity of the steam in the blades V_{r2}.** The angle β shows then the theoretical **" entrance " angle** for the blades that the steam may enter without loss of velocity due to shock or impact. These angles α and β are marked plainly in the drawing of " Section B." The **relative velocity of the steam leaving the blades is represented by V_{r3}.** Often the blades for impulse turbines are made symmetrical, so that the angle γ on the " exit " side of the blades is equal to the angle β on the " entrance " side. The **absolute velocity of the steam leaving the blades** is found by geometrically subtracting again the blade velocity V_b. The velocity of the blades is always subtracted a second time, because the direction of the steam has been reversed in passing through them. The **steam is discharged with the absolute velocity V_3,** which is called commonly the " residual " velocity.

Conditions of Best Efficiency. The condition for the highest efficiency of this simple turbine (**Fig. 38**) will now be discussed. The same velocities represented at the bottom of Fig. 38 are shown again with the addition of an enlarged section of a blade

* The " back " of the blade is the side with convex curvature.

in Fig. 43. The notation is the same as in Figs. 38–41. V_2 and V_3 * are the **absolute velocities of the steam entering and leaving the blade,** of which a shaded section is shown. V_{r2} **and** V_{r3} **are**

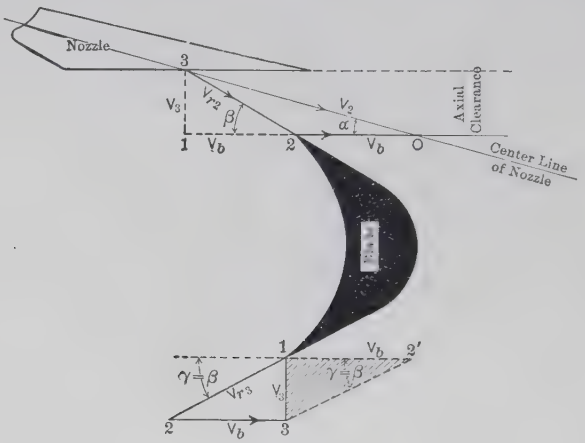

FIG. 43. Velocity Triangles for an Impulse Turbine.

the corresponding relative velocities of the steam as it passes through the blade. Now the **energy** in the steam is measured, of course, in terms of its absolute velocity, and **is proportional to the square of its velocity.**† The energy, then, in a pound of steam entering a blade is $\frac{V_2^2}{2g}$ and on leaving is $\frac{V_3^2}{2g}$. **The energy taken away by the blades is, therefore,** $\frac{1}{2g}(V_2^2 - V_3^2)$. Here g is the acceleration due to gravity (32.2), and for all practical purposes is a constant value. Energy converted into work in a

* Observe that V_2, V_3, V_4, etc., indicate **absolute** velocities, and V_{r2}, V_{r3}, V_{r4}, etc., are **relative** velocities. This relation should be of much assistance in reading the diagrams.

The order in the use of subscripts follows the method use for the nozzles in the preceding chapters. The **subscript** 1 is still used to represent the **initial** condition of the steam as it **enters** the nozzles of an impulse turbine or the first row of stationary blades in a reaction turbine, while the **subscript** o is for the **condition at the throat** of a nozzle. The first "discharge" velocity either from nozzles or stationary blades is therefore represented by the subscript 2.

† See discussion of available (kinetic) energy and velocity, page 22.

turbine depends then, theoretically, only on the term $(V_2^2 - V_3^2)$. This term will have its best value, of course, when V_3 is made as small as possible. The **best theoretical conditions of blade speed and steam velocity** are shown in the following discussion:

In practice it is usual to have given (1) the velocity of the steam entering the blades; (2) the "nozzle angle" (the angle at which the steam strikes the blades); and usually in impulse turbines still another condition, (3) that the entrance and exit angles (β and γ) are equal. The velocities that must be considered for these conditions are shown in **Fig. 43.** Here $\mathbf{V}_2$ is the absolute velocity of the steam entering the blades, the angle α is the "nozzle angle" and shows the inclination of the nozzle to the plane of the turbine wheel. $\mathbf{V}_b$ is the peripheral velocity of the blades, $\mathbf{V}_{r2}$ and $\mathbf{V}_{r3}$ are the relative velocities of the steam in the blades, and $\mathbf{V}_3$ is its absolute velocity leaving the blades. By the conditions stated, V_2 and the angle α are known, and **we are to find the most suitable blade velocity** $(\mathbf{V}_b)$. Also the angle β is equal to the angle γ, although the value of neither of these angles is assumed. The velocities $\mathbf{V}_2$, $\mathbf{V}_b$, **and** $\mathbf{V}_{r2}$ **will form one triangle of velocities,** and still **another triangle is made with** $\mathbf{V}_b$, $\mathbf{V}_{r3}$, **and** $\mathbf{V}_3$. The corners of the latter triangle are marked **1, 2, 3,** and from the geometry of the figure this triangle is obviously equal to the triangle **1, 2′, 3,** marked by cross-hatching. Now, if we **assume there is no loss** of velocity due to friction and shock in the blades then $V_{r2} = V_{r3}$, and the triangle 1, 2′, 3 can then be inverted, and, putting the point 2′ at 2, it can be made to join up with the triangle **0, 2, 3** which shows the initial velocities at the upper end of the blade. The base 0, 1 of the new triangle **0, 1, 3** is now equal to $2\ V_b$ and we can write, by the "*Law of Cosines,*" the equation

$$\mathbf{V}_3^2 = \mathbf{V}_2^2 + (2\,\mathbf{V}_b)^2 - 2\,\mathbf{V}_2\,(2\,\mathbf{V}_b)\cos\alpha, \qquad (11)$$

or
$$V_2^2 - V_3^2 = 4\,V_2\,V_b\cos\alpha - 4\,V_b^2,$$

$$\mathbf{V}_2^2 - \mathbf{V}_3^2 = 4\,\mathbf{V}_b\,(\mathbf{V}_2\cos\alpha - \mathbf{V}_b). \qquad (12)$$

In this equation the term $(V_2^2 - V_3^2)$, which is a measure of the energy taken away from the steam, is greatest when $4\ V_b$

($V_2 \cos \alpha - V_b$) has its largest value; * or we get the maximum energy taken from the steam when

$$V_b = \frac{1}{2} V_2 \cos \alpha, \qquad (13)$$

which is the condition when the line 3, 1, or V_3, is perpendicular to V_b, that is, when the steam leaves the blade perpendicular to the plane of the wheel.†

The condition for which the last set of equations has been worked out represents the usual conditions in practice. That is the " nozzle angle " is usually assumed (about 20 degrees), and the blade angles β and γ are made equal. For this case equation (12), above, represents the best blade conditions, with the absolute velocity of the steam entering the blades (V_2) and the velocity of the blades (V_b) as the only variables.

We can express the **efficiency of the action of the** blades by dividing the energy taken away in performing work by the energy represented by the velocity of the entering steam; thus,

Energy taken away for work, or the actual work done $= \frac{V_2^2 - V_3^2}{2g}$.

Total energy in the steam, which is a measure of the total work possible $= \frac{V_2^2}{2g}$.

$$\text{Efficiency} = \frac{\text{actual work done}}{\text{total work possible}} = \frac{V_2^2 - V_3^2}{2g} \div \frac{V_2^2}{2g} = \frac{V_2^2 - V_3^2}{V_2^2}. \qquad (14)$$

Now, in equation (12) we have for the best conditions,

$$V_2^2 - V_3^2 = 4 V_b (V_2 \cos \alpha - V_b).$$

* If we make the substitution $V_2^2 - V_3^2 = y$, $V_b = x$, $K = V_2 \cos \alpha$, then for equation (12) we can write $y = 4x(K - x) = 4Kx - 4x^2$.

For the maximum value of y,

$$\frac{dy}{dx} = 4(K - 2x) = 0.$$

$$x = \tfrac{1}{2} K, \text{ or } V_b = \tfrac{1}{2} V_2 \cos \alpha.$$

† Without the calculus demonstration it is obvious that $V_2^2 - V_3^2$ is largest for given values of V_2, when V_3 is smallest, and this is when the line 3,1 in the triangle 0,1,3 is shortest; or, in other words, when the direction of V_3 is perpendicular to the direction of V_b.

Then substituting this in equation (14),

$$\text{Efficiency} = \frac{4\,V_b\,(V_2 \cos\alpha - V_b)}{V_2^2} = \frac{4\,V_b}{V_2}\left(\cos\alpha - \frac{V_b}{V_2}\right). \qquad (15)$$

If, further, the "nozzle angle" α is 20 degrees, as is so common in practice, then

$$\text{Efficiency} = \frac{4\,V_b}{V_2}\left(.940 - \frac{V_b}{V_2}\right). \qquad (16)$$

The only variable left in this equation is the ratio $\frac{V_b}{V_2}$, and it follows then that the **efficiency of a single row of blades with a given nozzle angle and equal entrance and exit angles for the blades depends only on the ratio of the velocity of the blades to the velocity of the steam discharged from the nozzle.**

In **Fig. 43a** a curve is shown which has been calculated to represent equation (16) for varying values of blade speed (V_b) and with an initial steam velocity (V_2) of 3000 feet per second. The

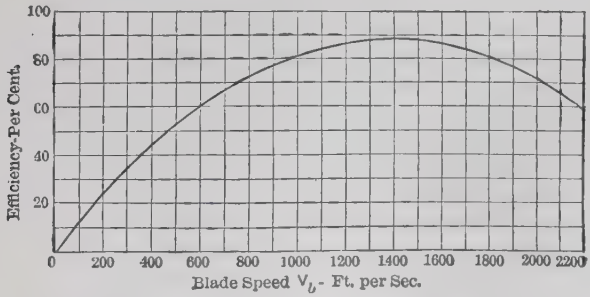

FIG. 43a. Curve of Efficiency of an Impulse Turbine with One Row of Blades and a Nozzle Angle of 20 Degrees for Varying Blade Speeds.

increase in efficiency with increased blade velocity should be observed, and that the **highest efficiency is obtained when the blade speed (V_b) is about half the velocity of the steam discharged from the nozzle (V_2).** This is a **good rough-and-ready rule to remember.** If, then, the steam velocity is 2500 feet per second,

the peripheral velocity of the blade wheel, for the highest efficiency, should be about 1250 feet per second. For mechanical reasons it is difficult to construct turbine wheels to run at speeds much greater than 500 feet per second, so that many designers will generally use low blade speeds to get velocities more suitable for commercial application, knowing well that in this respect they are sacrificing their highest efficiency.

In designing blades for turbine wheels the entrance and exit angles (β and γ) should always be made as nearly as possible of the size determined by the velocity diagrams. If the angles are made much different, there is a sudden change in the direction of the steam instead of a gradual change, with a consequent loss due to shock or impact.

Fig. 43 can be used again to determine the best relations between blade speed ($\mathbf{V}_b$), the absolute velocity of the steam entering the blades ($\mathbf{V}_2$), and the angles β and γ. The following relations are obvious:

$$V_2^2 = V_b^2 + V_{r2}^2 - 2\, V_b V_{r2} \cos (180 - \beta) \qquad (A)$$

$$V_3^2 = V_b^2 + V_{r3}^2 - 2\, V_b V_{r3} \cos \gamma \qquad (B)$$

$$V_2^2 - V_3^2 = -2\, V_b V_{r2} [\cos (180 - \beta) - \cos \gamma] \qquad (C)$$

Equation (C) is obtained by subtracting equation (B) from (A) and assuming, as before, that $V_{r2} = V_{r3}$; that is, neglecting blade losses. Putting $\cos (180 - \beta) = -\cos \beta$, we have

$$V_2^2 - V_3^2 = 2\, V_b V_{r2} (\cos \beta + \cos \gamma). \qquad (16a)$$

Now the maximum value of $V_2^2 - V_3^2$, which is the measure of the energy taken from the steam, is secured, in terms of β and γ when the product $V_b V_{r2}$ has its greatest value. It can be proved by geometry, or approximately by trial in a triangle drawn to scale, that with V_2 and the angle β given **the product of the sides $\mathbf{V}_b$ and $\mathbf{V}_{r2}$ will have a maximum value when $\mathbf{V}_b = \mathbf{V}_{r2}$.** Now when $V_b = V_{r2}$ the triangle **0,2,3** in **Fig. 43** is isosceles and each of its acute angles is $\frac{1}{2}\beta$. The geometry of the figure gives then

$$V_b \cos \tfrac{1}{2}\beta + V_b \cos \tfrac{1}{2}\beta = V_2, \text{ and}$$

$$\mathbf{V}_b = \frac{\mathbf{V}_2}{2 \cos \frac{1}{2}\beta}. \qquad (17)$$

We have thus obtained a very simple equation for calculating the blading of an impulse turbine; but it must not be overlooked that if the entrance and exit angles are not equal, this formula must be considerably modified, and the result would not be nearly so simple.

Impulse Force Due to Stream Flow Across Stationary Blades. In Fig. 44 a stream of fluid is shown impinging on a blade at

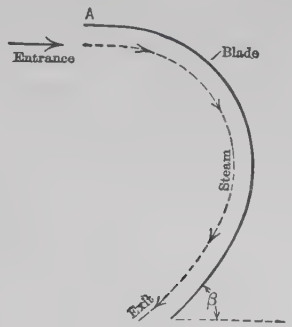

FIG. 44. Stream Lines in Turbine Blade.

A where the direction of flow is horizontal and parallel to the contour of the tip of the blade. At A the stream exerts an impulse I in the direction of flow, and as it leaves the blade it exerts a reaction R, parallel to the direction of flow at the other end but opposite to the initial direction of flow. The component of R in the direction at which the stream enters the blade (horizontal) is $\mathbf{R} \cos \beta$, where β is the angle the leaving stream makes with its initial direction (horizontal). But since impulse is equal to reaction (see page 66), $\mathbf{I} = \mathbf{R}$. Consequently the total pressure upon the blade due to both impulse and reaction is

$$\mathbf{I} + \mathbf{R} \cos \beta \text{ or } \mathbf{I} (1 + \cos \beta).$$

When the stream flow has been turned through 180 degrees in its passage over the blade, $\beta = 0$, $\cos \beta = 1$, and the total pressure is $2I$. It has been shown (page 66) that

$$\mathbf{I} = \frac{\mathbf{WV}}{g},$$

and therefore total pressure on the blade is

$$2\,\mathrm{I} = \frac{2\,\mathrm{WV}}{g}.$$

Also when $\beta = 90$ degrees, as is approximately the case in **Fig. 33,** $\cos\beta = 0$, and the total pressure is

$$\mathrm{I} = \frac{\mathrm{WV}}{g}.$$

Efficiency of Velocity Stages. An impulse turbine with more than one row of moving blades in a single pressure stage (**velocity stage** type) is represented by Fig. 39. The energy taken away from the steam for work, as expressed in equation (12), can be readily modified to suit this case. We should have observed that each time steam passes through a **moving** blade the blade velocity (V_b) is twice taken away (subtracted geometrically) in the velocity diagrams. **If there are N rows of moving blades,**

$$\mathrm{V}_2^2 - \mathrm{V}^2{}_{N+2} = 4\,\mathrm{NV}_b\,(\mathrm{V}_2\cos\alpha - \mathrm{NV}_b).^* \quad (12')$$

And similarly (compare with equation 15, page 79),

$$\text{Efficiency} = \frac{4\,\mathrm{NV}_b\,(\mathrm{V}_2\cos\alpha - \mathrm{NV}_b)}{\mathrm{V}_2^2} = \frac{4\,\mathrm{NV}_b}{\mathrm{V}_2}\left(\cos\alpha - \frac{\mathrm{NV}_b}{\mathrm{V}_2}\right),$$

and for a 20-degree nozzle,

$$\text{Efficiency} = \frac{4\,\mathrm{NV}_b}{\mathrm{V}_2}\left(.940 - \frac{\mathrm{NV}_b}{\mathrm{V}_2}\right). \quad (18)$$

Efficiency of a Simple Impulse Turbine for Given Blade Speed. In the discussion of the maximum blade efficiency of impulse turbines which has preceded, the velocity of the steam entering

* This can be shown geometrically very easily by the method illustrated at the top of Fig. 43 which will be here drawn for *three rows of moving blades.* As in the other figures, V_2 is the velocity of the steam entering the first row of blades and $V_{r2} = V_{r3}$; then in Fig. 45

$$V_b^2 = \mathrm{V}_2^2 + (6\,V_b)^2 - 2\,V_2 \times 6\,V_b\cos\alpha.$$

$V_2^2 - V_b^2 = 12\,V_b\,(V_2\cos\alpha - 3\,V_b)$; and $V_2^2 - V^2{}_{N+2} = 4\,NV_b\,(V_2\cos\alpha - NV_b)$, if N is the number of rows of moving blades.

the blades was assumed to be known and a suitable blade speed was determined in terms of the entrance and exit angles, which were assumed to be equal. This is the problem which arises when a single-stage impulse turbine is to be designed for given initial and final pressures. When, however, an impulse turbine of more than one stage is to be designed with a fixed blade speed (V_b) of say 500 feet per second,* it is desirable to determine the

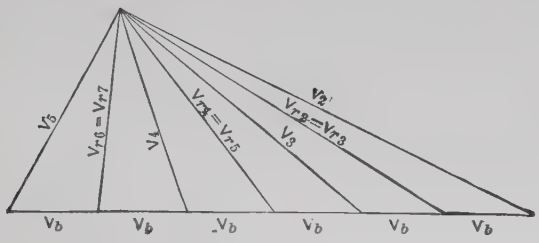

FIG. 45 (see footnote).

pressure drop in the first stage (and probably also in the second stage, depending on the action of the valve gear) to obtain the highest efficiency in this stage. This is because the best results are obtained in most types by getting a larger proportion of work from the first stage than from the other stages.† Efficiency, therefore, is a more important consideration in this stage than in the others.

We have thus obtained a very simple form for calculating the efficiency of an impulse turbine; but it must not be overlooked

* Many manufacturers have a standard blade speed and all sizes of turbines are designed for this standard. The blade speeds of impulse turbines vary from 350 to 1200 feet per second. The latter figure, it is stated, has been used successfully by a European manufacturer.

† The reason for designing the first stage for the largest amount of work — from 25 to 50 per cent. more than in any of the other stages — is most apparent in turbines operated by "cut-off" governing like the Curtis turbines. This method of governing permits a constant standard pressure (presumably that giving the maximum efficiency) in the first stage at all loads, while with fluctuating loads the pressures will vary considerably in the other stages. But there are also other reasons for this method; such as getting down the pressure early so as to reduce rotation loss in all stages of the turbine and the injurious effect of high temperatures on the blades or buckets. Difficulties as regards packing around the shaft at the high-pressure end and "stage leakage" (see pages 103 and 105) are minimized.

that if the entrance and exit angles are not equal, and in the case of velocity stages if the exit angle of the stationary " intermediate " blades is not the same as the angle at which the steam is discharged from the preceding blades, these formulas must be considerably modified and the result would not be nearly so simple. It should be observed also that all losses from friction and eddies have been neglected. These more practical considerations are discussed in connection with the examples of actual designs of blades on pages 103 to 113.

EFFICIENCY OF THE BLADES OF REACTION TURBINES.

As in the case of the impulse turbine, the expressions for energy and **efficiency** will now be derived for the **reaction turbine,** assuming again that there are no losses to be considered. We must remember that in the reaction turbine there are no nozzles for expanding the steam but that the expansion occurs in both the stationary and the moving blades, so that as the steam goes through the turbine its velocity is gradually and continually changing.

We shall first consider a reaction turbine (**Fig. 46**) with only two sets of blades. As there are no nozzles, the first set is, of

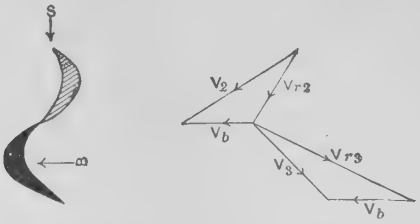

FIG. 46. Velocity Diagrams for One Stage of a Reaction Turbine.

course, made stationary. The steam expands in going through these stationary blades and attains the velocity V_2* when it reaches the first set of moving blades. The relative velocity with which the steam enters the moving blades is V_{r2}. Now, in these blades the steam is again expanded, so that just before it leaves the moving blades its relative velocity is V_{r3}, which is greater thar

* See note at the bottom of page 78 regarding this notation.

V_{r2}. The absolute velocity at which it is discharged from the moving blades is V_3, and we have the following energy relations:

$\frac{V_2^2}{2g}$ = **kinetic energy in steam leaving the stationary blades,** or the kinetic energy entering the moving blades.

$\frac{V_{r3}^2 - V_{r2}^2}{2g}$ = **kinetic energy developed in the moving blades.**

$\frac{V_3^2}{2g}$ = **kinetic energy carried away in the discharged steam.**

The actual **work done on the moving blades is** W_k = (kinetic energy of the steam entering the moving blades) + (kinetic energy developed in the moving blades) − (kinetic energy carried away), or

$$W_k = \frac{V_2^2}{2g} + \frac{V_{r3}^2 - V_{r2}^2}{2g} - \frac{V_3^2}{2g}. \qquad \text{(A)}$$

If the steam had left the moving blades with zero velocity, and, therefore, no energy had been carried away in the discharged steam, the energy available for work would be

$$W_a = \frac{V_2^2}{2g} + \frac{V_{r3}^2 - V_{r2}^2}{2g}, \text{ and} \qquad \text{(B)}$$

$$\text{Efficiency} = \frac{\text{actual work done (A)}}{\text{total work possible (B)}} = \frac{V_2^2 + V_{r3}^2 - V_{r2}^2 - V_3^2}{V_2^2 + V_{r3}^2 - V_{r2}^2}.* \quad (19)$$

In the same way the efficiency can be calculated for any number of rows of blades. **Equation (19) expresses the efficiency for only two rows of blades — one stationary and one moving — or, in other words, for one stage.** We shall now obtain the efficiency for three stages, that is, for six rows of blades. The corresponding velocity diagram is shown in **Fig. 47.**

$\frac{V_{a2}^2}{2g}$ = kinetic energy developed in the first stationary blades.

* Efficiency of a single stage approaches its maximum value as V_3 is diminished. If V_3 could be made zero, the efficiency would be 100 per cent.

$\frac{V_{r3}^2 - V_{r2}^2}{2g}$ = kinetic energy developed in the first moving blades.

$\frac{V_{b2}^2}{2g}$ = kinetic energy in steam leaving the second stationary blades.

$\frac{V_{r5}^2 - V_{r4}^2}{2g}$ = kinetic energy developed in the second moving blades.

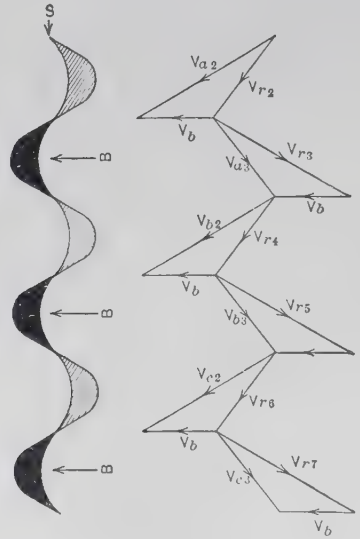

FIG. 47. Velocity Diagrams for Three Stages of a Reaction Turbine.

$\frac{V_{c2}^2}{2g}$ = kinetic energy in steam leaving the third stationary blades.

$\frac{V_{r7}^2 - V_{r6}^2}{2g}$ = kinetic energy developed in the third moving blades.

$\frac{V_{c3}^2}{2g}$ = kinetic energy carried away in the discharged steam = final residual velocity.

We observe here that the **velocities V_{a3} and V_{b3} are not lost** but represent velocities that can be effective in the succeeding stages. For this reason their energies do not enter the discussion of efficiency. The actual work in moving the blades is then

$$W_k = \left[\frac{V_{a2}^2}{2g} + \frac{V_{r3}^2 - V_{r2}^2}{2g}\right] + \left[\frac{V_{b2}^2}{2g} + \frac{V_{r5}^2 - V_{r4}^2}{2g}\right] + \left[\frac{V_{c2}^2}{2g} + \frac{V_{r7}^2 - V_{r6}^2}{2g}\right] - \frac{V_{c3}^2}{2g}.*$$

Now, in designing a **reaction turbine** it is desirable to assume that the blade velocities and the corresponding angles of the blades are the same and that equal steam velocities are developed in each of the three stages, so that

$$V_{a2} = V_{b2} = V_{c2};\ V_{r2} = V_{r4} = V_{r6};\ V_{r3} = V_{r5} = V_{r7};\ \text{and}\ V_{a3} = V_{c3}.$$

$$W_k = 3\left[\frac{V_{a2}^2}{2g} + \frac{V_{r3}^2 - V_{r2}^2}{2g}\right] - \frac{V_{a3}^2}{2g}.$$

The total energy in the steam available for work in this case is

$$W_a = 3\left[\frac{V_{a2}^2}{2g} + \frac{V_{r3}^2 - V_{r2}^2}{2g}\right].$$

The efficiency is then

$$\frac{W_k}{W_a} = \frac{V_{a2}^2 + V_{r3}^2 - V_{r2}^2 - \frac{1}{3}V_{a3}^2}{V_{a2}^2 + V_{r3}^2 - V_{r2}^2}.\dagger \qquad (20)$$

It is clear, then, that in the expression for efficiency the last term in the numerator changes its coefficient with the number of stages, and we see in what proportion the efficiency is increased with the number of stages.

* In an impulse type it is probable the steam becomes practically "dead" as regards velocity before it goes through the next set of nozzles.

† Observe efficiency approaches maximum value as V_{a3} ($= V_{b3} = V_{c3}$, residual velocity) is reduced, and also as number of stages is increased. With 50 stages the coefficient of this term would be $\frac{1}{50}$ instead of $\frac{1}{3}$.

THE MECHANICS AND THERMODYNAMICS OF A STAGE AND A GROUP OF STAGES IN REACTION TURBINES.

The stationary blades of a reaction stage perform the function of a ring of converging nozzles, that is, the steam expands adiabatically from an initial pressure P_1 to a lower pressure at exit P_2 and thereby a certain amount of energy E_2 is made available in the form of the kinetic energy of the jet at exit. The

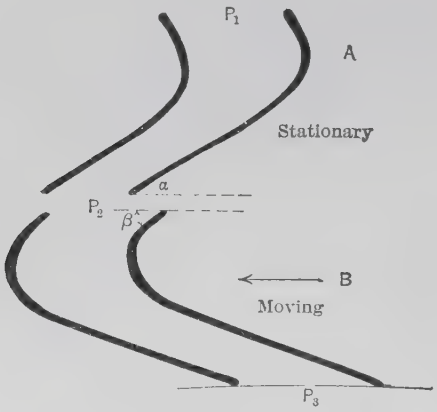

FIG. 47a. Simple Reaction Blading.

amount of energy to be thus made available in any row is generally settled before the actual designing is begun.

The relation between the velocity of discharge V_2 and the available energy in foot-pounds per pound E_2 is as already stated,

$$E_2 = \frac{V_2^2}{2g}.$$

The velocity V_b of moving blades is made under normal conditions slightly less than the velocity of discharge of the steam V_2 from the stationary blades. Therefore steam enters the moving blades at a comparatively low relative velocity V_{r2} and at an angle β, somewhat less than 90°. **(Fig. 47b.)**

A moving row of blades can be conceived as being a ring of converging nozzles through which the steam expands adiabatically from the pressure P_2 mentioned above to a lower discharge pressure P_3* and thereby an additional amount of energy E_3 is

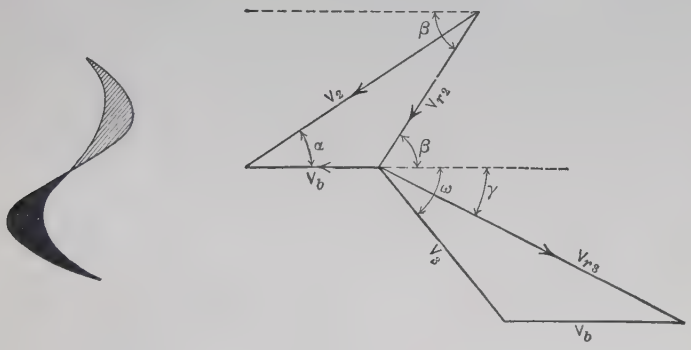

Fig. 47b. Velocity Diagrams for Reaction Blading.

made available by increasing the relative velocity from V_{r2} at entrance to V_{r3} at the discharge, when assuming no frictional losses along the blades, thus

$$E_3 = \frac{V_{r3}^2 - V_{r2}^2}{2g}.$$

Impulse Force due to Stream Flow Across Moving Blades. The total "tangential" force F on a moving row of blades depends on the amount of steam flowing (W) in pounds per second, on the relative entrance and discharge velocities (V_{r2} and V_{r3}) and on the entrance and exit angles (β and γ). The impulse of the stream entering the moving blades is $\frac{WV_{r2}}{g} \cos \beta$ (**Fig. 43**), and similarly when leaving is $\frac{WV_{r3}}{g}$; then

$$F = \frac{W}{g} \{V_{r2} \cos \beta + V_{r3} \cos \gamma\}. \qquad (21)$$

* The steam pressure P_3 and density at the exit of the moving row of blades are again obtainable directly by means of an entropy-heat chart. See, for instance, steam charts by F. O. Ellenwood, published by John Wiley & Sons; and by John Morrow, published by Longmans.

This formula is deduced from first principles of mechanics as applied for the case of an impulse blade. The action of the steam jet in propelling the moving blades is the same in both the impulse and the reaction. It should be noted that the formula gives the actual tangential force acting on the blades, **provided that friction losses along the stationary and moving blades have been allowed for in computing the relative velocities V_{r2} and V_{r3}.**

The power transmitted is of course proportional to the product of the force **F** into tangential blade velocity V_b, and is equal to

$$\frac{WV_b}{g}\{V_{r2}\cos\beta + V_{r3}\cos\gamma\}.$$

Efficiency of a pressure stage is therefore written,

$$\text{Efficiency} = \frac{V_b(V_{r2}\cos\beta + V_{r3}\cos\gamma)}{gE}, \qquad (22)$$

where **E** is the total available energy in foot-pounds per pound of steam corresponding to the total pressure drop in the stage considered. The rate of steam flow **W** through the stationary and moving rows of blades is defined by the following relations which form the basis of all calculations for the flow of steam through nozzles, thus,

$$W = A_2V_2d_2 = A_3V_{r3}d_3,$$

where A_2 and A_3 are the net minimum passage areas in square feet at the discharge from the stationary and movable blades respectively, d_2 is the steam density in pounds per cubic foot at the discharge from the stationary blades, d_3 is the steam density in pounds per cubic foot at the discharge from the movable blades, and V_2 and V_{r3} are the corresponding steam velocities (feet per second) as previously defined. This expression gives the effective steam flow; that is, the amount of steam flowing between the blades and doing useful work. The leak-

age steam at the tip of the blades in the clearance space will be considered later. It should be noted that the expression

$$\frac{(V_{r2}\cos\beta - V_{r3}\cos\gamma)V_b}{g} \qquad (22a)$$

gives the useful output in foot-pounds per pound of steam; and that similarly the useful output in B.T.U. per pound of steam is given by

$$\frac{(V_{r2}\cos\beta + V_{r3}\cos\gamma)V_b}{g \times 778}. \qquad (22b)$$

As already stated above, in using these formulas the relative velocities V_{r2} and V_{r3} at the entrance and discharge sides of the moving row are respectively actual values after proper allowances

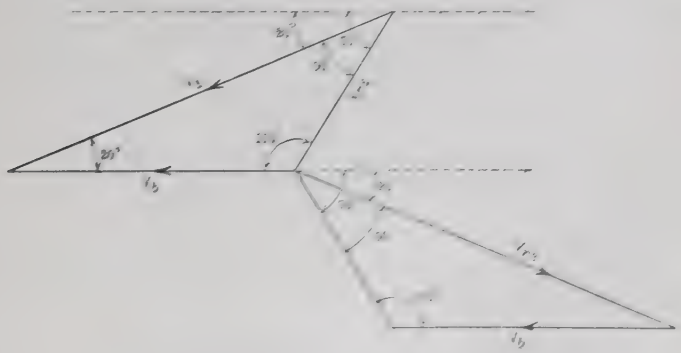

FIG. 47c. Illustration of a Practical Example.

are made for frictional losses in the stationary and moving rows of blades. Proper coefficients to allow for these friction losses will be given later. It is sufficient to say here that the kinetic energy actually developed in either the stationary or moving blades is about .8 to .85 of the available energy, that is

$$fE_2 = V_2^2/2g, \qquad fE_3 = \frac{(V_{r3}^2 - V_{r2}^2)}{2g},$$

where **f** is a fraction equal to .8 to .85. The relative velocity at the entrance to the moving blade $\mathbf{V}_{r2}$ is of course computed by means of a simple trigonometric formula applied to the velocity diagram illustrated in **Fig. 46.**

Example. Consider a common blade section (**Fig. 47b**) for both stationary and moving blades, having a discharge angle α of 20° and an entrance angle β of 70°. Referring to **Fig. 47c,**

$$\frac{V_2}{\sin 110^\circ} = \frac{V_{r2}}{\sin 20^\circ} = \frac{V_b}{\sin 50^\circ} \quad \text{.... for stationary blades,}$$

$$\frac{V_{r3}}{\sin 110^\circ} = \frac{V_b}{\sin 50^\circ} \quad \text{..... for moving blades,}$$

$$V_2 = 1.23\ V_b, \qquad V_{r2} = .446\ V_b, \qquad V_{r2} = 1.23\ V_b.$$

That is, the ratio of the steam velocity discharging from stationary blades to the peripheral blade velocity V_b is 1.23.

Available energy $\mathbf{E}_2$ in steam from stationary blades is

$$fE_2 = \frac{V_2^2}{2\,g} = \frac{(1.23)^2\ V_b^2}{2\,g} \quad \text{or} \quad E_2 = \frac{1.51\ V_b^2}{f\ 2\,g},$$

where f is a coefficient for friction losses along the blades. The available energy (E_3) developed in the moving row is

$$fE_3 = \frac{V_{r3}^2 - V_{r2}^2}{2\,g} = \frac{1.31\ V_b^2}{2\,g} \quad \text{or} \quad E_3 = \frac{1.31\ V_b^2}{f\ 2\,g}.$$

Total available energy for a stage $E = E_2 + E_3$.

Thus for a peripheral velocity $V_b = 350$ feet per second and $f = .81$ (corresponding to a velocity coefficient = .90) the total available energy for the stage is $E = E_2 + E_3$, or expressed in terms of blade velocity,

$$E = \frac{1.51\ V_b^2}{f\ 2\,g} + \frac{1.31\ V_b^2}{f\ 2\,g} = \frac{2.82\ V_b^2}{f\ 2\,g} = \frac{1.41\ V_b^2}{f\ 2\,g}$$

$$E = \frac{1.41 \times 350^2}{.81 \times 32.16} = 6600 \text{ ft.-lbs. per lb. of steam (8.45 B.T.U.).}$$

The useful output per moving row of blades is

$$\frac{V_b\,(V_{r2}\cos\beta + V_{r3}\cos\gamma)}{g} = \frac{V_b\,(.152\,V_b + 1.158\,V_b)}{g} = \frac{1.31\,V_b^2}{g}$$

$$= 5000 \text{ foot-pounds per pound of steam.}$$

$$\text{Efficiency} = \frac{5000}{6600} = 75.6 \text{ per cent.}$$

We shall now consider a number (**N**) of pressure stages as illustrated in **Fig. 47,** where all the moving blades have the same peripheral velocity V and the same blade section (the same entrance and exit angles). Also all the stationary blades have a common section. This is equivalent to saying that all the pressure stages have the same velocity diagram shown in **Fig. 46.** It should be noted that the residual velocity from any moving row of blades (except the last) is utilized in the following stationary row and all the stages except the first utilize the same available energy, E. The pressure and density at the beginning and end of each row or expansion can again be read directly from steam charts assuming adiabatic expansion and following a constant entropy line.* This of course presupposes that the available energy utilized per stage is known. As already shown in the previous example, the available energy per stage for given blade angles is in the last analysis proportional to the square of the peripheral velocity (V) of the moving blades and is determined by it.

Let E_2 be the available energy utilized per pound of steam in any of the stationary blades except the first.

$$E_2 = \frac{V_2^2 - V_3^2}{2\,gf},$$

where f is a coefficient to allow for friction. The available

* Steam charts like Ellenwood's (John Wiley & Sons) can be used to advantage.

energy in one pound of steam leaving the first stationary row is

$$E_1 = \frac{V_2^2}{2gf}.$$

The available energy utilized per pound of steam in any of the moving rows is

$$E_3 = \frac{V_{r3}^2 - V_{r2}^2}{2gf}.$$

Available energy in any stage except the first is

$$E = E_2 + E_3 = \frac{1}{2gf}\{V_2^2 - V_3^2 + V_{r3}^2 - V_{r2}^2\}.$$

For any set of blade angles all the steam velocities V_2, V_3, etc., can be expressed in terms of tangential blade velocity V_b of the moving rows of blades, by means of simple trigonometric relations. The available energy E in terms of blade speed that can be utilized per stage is expressed also as follows:

$$E = \frac{CV_b^2}{2gf},$$

where C is a constant easily determined for any given set of blade angles (see previous example).

The total available energy for N pressure stages is

$$NE + \frac{V_3^2}{2gf}.$$

As already stated previously (page 93) the useful output in foot-pounds per pound of steam from one row of moving blades is

$$\frac{(V_{r2}\cos\beta + V_{r3}\cos\gamma)\,V_b}{gf}.$$

Therefore the useful output for a number of N moving blades is

$$\frac{NV_b\,(V_{r2}\cos\beta + V_{r3}\cos\gamma)}{gf} \tag{22c}$$

The efficiency of the whole group is the ratio of useful output to the total available energy, and (neglecting friction)

$$\text{Efficiency} = \frac{(\mathbf{V}_{r2}\cos\beta + \mathbf{V}_{r3}\cos\gamma)\,\mathbf{V}_b}{\mathbf{gfE} + \dfrac{\mathbf{V}_3^2}{2\,\mathbf{N}}}. \tag{23}$$

The second term in the denominator shows the influence of the residual velocity loss.

This formula gives the overall efficiency of the stationary and moving blades, taking into account not only the loss due to residual velocity from the last row but also the friction loss along the moving and stationary blades.

Relation between Blade Height and Rotor Diameter. In blading of a given mean diameter **D** (inches) there are four factors determining the height of the blades as follows: (1) average actual specific volume of the steam **v** (cubic feet per pound) in the row of blades considered, corrected for moisture or superheat as may be necessary; (2) the peripheral speed of the blades $\mathbf{V}_b$ (feet per second), which is proportional to the revolutions per minute; (3) the blade exit angle γ (degrees); and (4) the actual flow of steam **through the blades W** (pounds per second).

For a mean diameter **D** (inches) of the blading the sectional area of the annulus which passes steam into the blades is $3.1416\,\mathbf{D} \times \mathbf{h}$ (square inches), where **h** is the height of the blades (inches).

Further, if $\mathbf{V}_a$ is the velocity of the steam as calculated from the available energy, and a constant **k** is used to represent the ratio $\frac{V_a}{V_b}$, then the area of the annulus (square inches) can also be written as $\frac{\mathbf{Wv} \times 144}{\mathbf{kV}_b \sin\gamma}$. Correction of this equation should

also be made for velocity coefficient **c** from **Fig. 51, page 101**, and it becomes $\frac{\mathbf{Wv} \times 144}{\mathbf{ckV}_b \sin \gamma}$.

The two values for the area of this annulus can then be equated,

$$\mathbf{3.1416\,D \times h} = \frac{\mathbf{Wv} \times 144}{\mathbf{ckV}_b \sin \gamma}, \text{ but } V_b = \frac{3.1416\,D \times N}{60},$$

$$3.1416\,D \times h = \frac{Wv \times 144 \times 60}{ck \times 3.1416\,D \times N \times \sin \gamma},$$

$$\mathbf{D^2h} = \frac{\mathbf{Wv} \times 864}{\mathbf{ckN} \sin \gamma}, \qquad (24)$$

when using the approximate value $(3.1416)^2 = 10$.

This equation must represent the conditions affecting the design throughout the turbine. Data for the determination of the right-hand member of the equation are usually available, so that it can readily be calculated. Values of blade height **h** and rotor diameter **D** must then be determined by the " cut and try " method of calculation; that is, by choosing one value and solving for the other.

For the greater portion of the reaction blading of a steam turbine (usually excluding the last rows of the low-pressure section) values of **k** and γ are constant and **c** varies but little, so that for **practical designing of reaction blading** we can write,

$$\mathbf{D^2h} = \mathbf{v} \times \mathbf{a\ constant.} \qquad (25)$$

This equation is very useful for calculating intermediate heights and diameters in a section of reaction blading, after having determined either the first row or the last.

Velocity Diagrams of Re-entry Turbines. Velocity diagrams for re-entry turbines (Westinghouse, impulse type, Sturtevant, Terry, etc.) are usually laid out in the same general way as for Curtis turbines. Turbines of this type generally have equal inlet and outlet angles. The velocity losses in the reversing chambers are about the same as in the intermediate blades of Curtis turbines.

PRACTICAL DESIGNING OF BLADES.

In designing blades for steam turbines we must determine with accuracy,

(1) The angles for the edges of the blades.

(2) The radial height or length of the blades.

From the preceding discussion of velocity diagrams and blade efficiencies it should be clear how the best angles for the edges are obtained. It is first necessary to calculate the velocity resulting from adiabatic expansion between the limits of pressures in the stage for which the blades are intended. Then velocity diagrams must be constructed, varying the blade angles if the blade speed is assumed till the best efficiency is obtained. This will be when the steam leaves the last blades nearly at right angles to the plane of the wheel; that is, when the absolute velocity of the steam leaving the blades is, in the diagram, nearly perpendicular to the line showing the blade velocity (see pages 78 and 80).

Design of Blades for Impulse Turbines. We shall continue with the discussion of the design of blades for an impulse turbine with **nozzles** and with a **single row of blades,** assuming now that the entrance and exit angles (β and γ) have been determined. We shall assume also that the total area of the nozzles at their largest section has been calculated as it has been explained on pages 44 to 49.

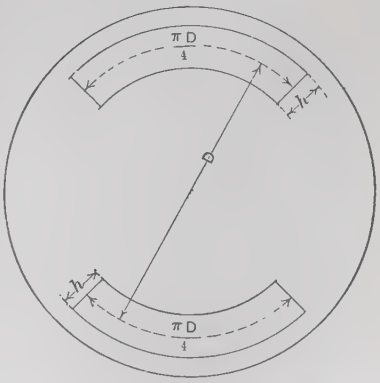

FIG. 48. Diagram Showing Location of Nozzles in a Diaphragm.

To avoid losses by eddies, nozzles are often arranged in groups placed symmetrically with respect to the periphery of the blade wheel. Usually the nozzles would be arranged in two groups diametrically opposite in a circular plate, called a **diaphragm**, as in **Fig. 48.** We shall assume that each nozzle

group covers one-fourth of the circumference of the blade wheel. Then if the blades in the wheel were removed so that they could not obstruct the flow of steam, the area through which the steam can pass is approximately $\frac{1}{4}\pi Dh$ for each nozzle group, where **D** is the mean diameter of the blade wheel and **h** is the height of the opening from which the blades have been removed. When, however, there are blades on the wheel the **height h** must be increased, because the effective area for the passage of steam is reduced.

Fig. 49 shows two views of a small segment of a blade wheel. The **pitch of the blades** is marked **p** and the blade angle is β. If there are no blades, the area for the passage of steam in a length **p** is approximately $p \times h$. With the blades in the wheel the area is only $h \times p \sin \beta$.* It follows then, when we have blades under the nozzle groups, that the **effective area under each group is** $h \times \frac{1}{4}\pi D \sin \beta$. If we call **A** the **total area of the nozzles at the largest cross-section (mouth)** we can write

$$A = \tfrac{1}{4}\pi Dh \sin \beta + \tfrac{1}{4}\pi Dh \sin \beta.$$
$$A = \tfrac{1}{2}\pi Dh \sin \beta.$$

$$h = \frac{2A}{\pi D \sin \beta} \qquad (26)$$

For steam at very high velocity the **height of the blades** as calculated will be too small for practical working conditions; so that blades less than .25 inch high are not often made. This minimum height is determined most on account of mechanical difficulties; but steam leakage through the clearance outside the blades also becomes excessive when very small blades are used.

In impulse turbines with only a few stages no effort is made to make use of the velocity, as such, of the steam leaving the last blades of a stage. This means some loss; and more experimental work might well be done with the object of showing how this loss can be turned to better account.

Fig. 50 shows how impulse turbine blades are laid out. The

* It is assumed in such calculations that the thickness of the edges of the blades is practically negligible.

designer must first decide how wide his blades shall be. For turbines of less than 100 horsepower the width of the blades is often made about 1 inch, increasing this dimension to about 1.5 inches in turbines of 1,000 horsepower. The pitch or circumferential distance between consecutive blades is made about .5 to .6 of the axial width.* In Fig. 50 the pitch is shown by the distance between the points 1 and 2. Hence, when a drawing of blades is started these points should first be located. At any point between 1 and 2 mark another point 3 and through it draw a line 3 3′, making an angle with the horizontal equal to the blade angle γ on that side. Draw through 2 a line perpendicular to the last line and intersecting the center line of the blades. Mark this point on the center line 5. Draw through 1 a line parallel to 3 3′ to intersect 2 5, at 4. With 5 as a center draw an arc tangent to 1 4, which completes the lower half of the convex side of the blade. With the same center the concave side of the next blade is drawn with the arc passing through 2. The arrows in the figure show

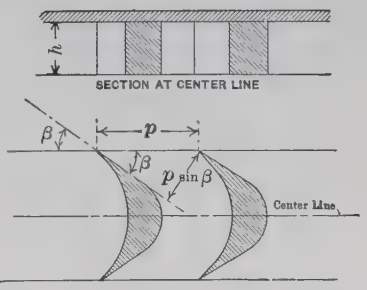

FIG. 49. Diagram Illustrating the Design of Blades for Impulse Turbines.

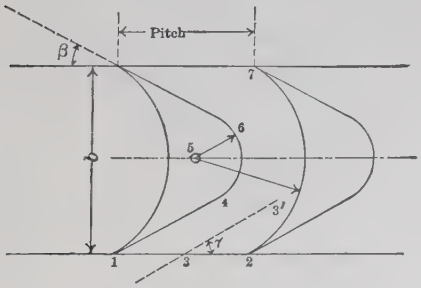

FIG. 50. Diagram Illustrating the Method for Laying Out the Blades of an Impulse Turbine.

* The most efficient blade pitch appears to be between the limits of $\frac{1}{2}$ inch and 1 inch. Between these two values the efficiency of blades made according to conventional designs is practically constant. The usual blade pitches are $\frac{5}{8}$, $\frac{3}{4}$, and $\frac{7}{8}$ inch. Even for very small turbines not much less than $\frac{1}{2}$-inch pitch should be used. Usually, the length of the longest blades does not exceed 10 times its width.

plainly the center for these arcs. This construction makes the "perpendicular" width of the steam passage nearly constant.

Blade Velocity Losses. Various attempts have been made by experimenters to determine the velocity losses in blades with stationary apparatus, usually by some method of measuring the **reaction** somewhat in the same way as the coefficients given in Fig. 28 were obtained for nozzles. Such results, however, are not satisfactory for application to designing. **Frictional, eddy, and impact losses in moving blades are certainly very different from what they are in stationary blades.** Apparently there are only two ways to get good data regarding these losses. Either the velocity must be measured between the blades of an operating turbine with a Pitot tube or similar device, or they must be determined by the "cut and try" method that has been generally followed by designers. The latter method is certainly expensive and a slow one for obtaining results. It seems, therefore, that more work should be done along the line of the former method by the application of the Pitot tube. In the latest designs of steam turbines there is no difficulty about getting sufficient space for a pressure tube between the blades, as the axial clearance in large turbines is often as much as $\frac{1}{6}$ inch.

Fig. 51 shows values of the velocity coefficients to be applied in designing steam turbine blades. Curve *A* is for blades receiving steam from nozzles. Curve *B* is for stationary blades, or for moving blades receiving steam from **stationary blades.** Values of both curves vary with the relative velocity of the steam in the blades. The true velocity in the blades is found by multiplying the theoretical **relative** velocity by the coefficient from the curves.* The values given by these curves may be taken as fairly representative for all the well-known commercial types

* Values given by these curves were obtained by very careful experimental work, using blades one inch wide. The losses are considerably greater in narrower blades, with correspondingly lower velocity coefficients. Note that a velocity coefficient of .96 is approximately equivalent to an energy coefficient of .92. These curves agree well with the determinations made by Rateau, Stevens, and Hobart from the analysis of the losses in *operating* turbines. Designers of Rateau turbines assume a blade velocity efficiency of 96 per cent. at relative velocities of about 600 feet per second. Obviously near zero velocity the loss is practically zero.

in which the blades have smooth surfaces and the entrance edges are made comparatively sharp and at a true angle. These curves are intended to be read for only two significant figures.

The initial steam velocities in turbines of the Parsons type vary from 300 to 700 feet per second, in Rateau turbines from 500 to 1500 feet per second, in Curtis turbines from 1500 to 3000 feet per second, and in some single stage types (De Laval) from 2500 to 4500 feet per second.

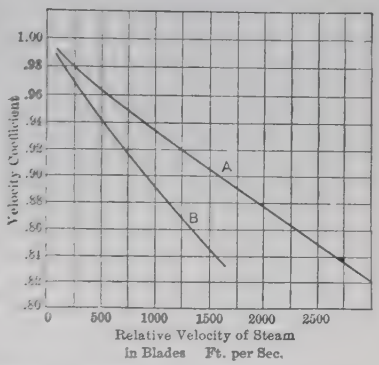

FIG. 51. Blade Velocity Coefficients. Curve A for moving blades following nozzles. Curve B for stationary blades or for moving blades following stationary blades.

The efficiency of energy conversion in the blades of steam turbines varies from 60 to 70 per cent.* for sizes from 300 to 3000 kilowatts,† and is roughly about 50 per cent. for smaller sizes of **impulse** turbines down to about 10 kilowatts. Still smaller sizes may have efficiencies less than 50 per cent., depending largely on the type of construction. For any size of turbine, then, the difference between 100 per cent. and this efficiency of energy conversion is the loss due to disk and blade rotation, leakage, residual velocity, and radiation.

In a well-designed turbine of say 300 to 500 kilowatts' capacity,

Designers of Parsons and Curtis turbines must use somewhat larger coefficients (cf. Curve B) for combinations of stationary and moving blades, because stationary blades are not as efficient as nozzles. The data for these curves were obtained by measuring with modified Pitot tube apparatus the velocity of steam discharged from stationary blades of various designs. The steam was directed upon the blades from calibrated nozzles.

* In stating this efficiency it is assumed that adequate provision is made in these turbines to prevent leakage: in impulse turbines, between the diaphragms and the shaft "**stage leakage**"; and, in reaction turbines, over the ends of the blades through the radial clearance. This leakage loss is as much as 10 to 15 per cent. in some good commercial turbines. It should be reduced, however, to not more than 5 per cent.

† A well-known engineer states that the energy efficiency of the 9000 to 12,000 kilowatt turbines installed in New York and Chicago is as high as 80 per cent. On a conservative basis, however, about 70 per cent. can be assumed for 5000-kilowatt sizes and 75 per cent. for 10,000-kilowatt sizes.

the sum of the losses due to friction, disk and blade rotation or "windage," leakage, residual velocity, and radiation losses is, therefore, about 40 per cent. For turbines of from 2000 to 5000 kilowatts these losses amount to only about 30 per cent. But these are not all actual losses. The energy equivalent of each of these losses, except that due to radiation, which is very small, is immediately converted into heat, and is partially regained in reheating the steam. The sum of these losses actually reheating the steam, expressed as a percentage of the total available energy, is called the **reheating factor.**

DESIGN OF BLADES FOR AN IMPULSE TURBINE.

Blades are to be designed for a 300-kilowatt turbine to operate with steam at 50° F. superheat, at an initial pressure of 165 pounds per square inch absolute, and exhausting at 1 pound per square inch absolute (approximately 28 inches vacuum). Blade speed V_b is 500 feet per second at the rated speed 3600 r.p.m. It is assumed that the nozzle will be correctly designed for the pressure, so that the nozzle **velocity** loss is 3 per cent. Governing is to be accomplished by the method of "cutting out nozzles" in the first stage (see page 305). By this method a practically constant steam pressure is maintained in the nozzles of the first stage from light load to overload, and the velocities in this stage are at all loads approximately those giving the best blade efficiencies. In the other stages, however, where the number of nozzles open is not controlled by the governor, the velocities are variable. For this reason a large pressure drop is to be used for this stage,* and to utilize the resulting high velocity efficiently there are to be two velocity stages in this pressure stage. A reasonable value for the first stage pressure is about 35 pounds per square inch absolute. The other stages are to be designed for highest efficiency with a single blade wheel in each pressure stage. Such a design will be a compound type — the first stage resembling the Curtis, and the other stages the Rateau turbines.

The energy available from adiabatic expansion in the first stage

* See footnote on page 85.

nozzles (as read from the entropy-heat chart) from 165 pounds per square inch absolute and 50° F. superheat to 35 pounds per square inch absolute is 122 B.T.U. Disk and blade rotation losses, leakage between the stages through the clearance between the shaft and the diaphragm, and residual velocity of the steam leaving the blades amount to 40 per cent.; and it is assumed that all this energy appears again as heat produced by disk and blade friction, steam impact, eddies, and throttling. There is then 40 per cent. of 122 B.T.U., or nearly 49 B.T.U., going to **reheating** the steam. This reheating occurs, of course, at the pressure in the first stage (35 pounds). As the result of reheating, the quality of the steam in the first stage is changed from .932 to .985, and the total heat of the steam going to the nozzles of the next stage is increased from 1103 to 1152 B.T.U. **Fig. 52** shows

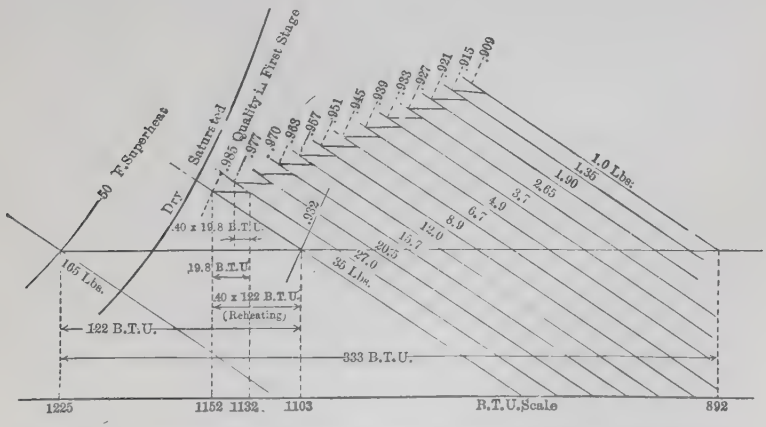

FIG. 52. Entropy-Heat Diagram for the Design of an Impulse Turbine.

graphically this reheating effect. It serves also to show the complete energy distribution as required for this design. In each stage, as in the first, the reheating is assumed to be 40 per cent.

Since all the stages after the first are to be of the single wheel impulse type, it is obvious that a large number of stages will be needed in order to absorb the velocity of the steam efficiently. In a stage of the single wheel type the velocity of the steam should

not be greater than twice the blade speed. Equation (17) shows the relation between the steam and blade velocities for the highest efficiency, and this equation can be used for determining quite accurately the **best energy distribution.** Because a designing coefficient (C) must be inserted to correct for the velocity loss in the blades, this equation will now be written

$$V_b = \frac{CV_2}{2 \cos \frac{1}{2}\beta}. \qquad (17')$$

Now the velocity coefficient for single blade wheels is about .95.* The angle β is usually about 40 degrees. Blade speed, V_b, is 500 feet per second. Then

$$V_2 = \frac{2 \times 500 \times \cos 20^\circ}{.95} = 989 \text{ feet per second.}$$

But from equation (2) we have the relation that the available energy (E_a) in terms of velocity is

$$E_a = \left(\frac{V_2}{223.7}\right)^2.$$

$$E_a = \left(\frac{989}{223.7}\right)^2 = 19.6 \text{ B.T.U.}$$

It is shown then that the required energy per stage is between 19.5 and 20 B.T.U. per stage. The energy distribution with reheating (40 per cent.) was calculated with the help of the chart for 19.5 and for 19.8 B.T.U. per stage, and it was found possible to get almost exactly equal energy distribution with 12 stages each of 19.8 B.T.U. between 35 pounds pressure (quality .985) and the exhaust pressure 1.0 pound. This distribution is shown in **Fig. 52.** The quality of the steam in each stage is recorded, so that the disk and blade friction can be calculated later from the formulas in Chapter V.

* See Fig. 51. To determine an approximate value for this coefficient the probable relative velocity must be estimated. If a very large error were made in assuming this coefficient it would be discovered as soon as the velocity diagrams are made, as the relative velocity and the coefficients can then be accurately determined. As a first approximation in this calculation the general principle in impulse blading may be assumed as stated on page 81, that for best efficiency in a single row of blades, the absolute velocity of the steam entering the blades is twice the blade speed V_b.

Velocity of the steam discharged from the first stage nozzles is

$$V_2 = .97 \times 223.7 \sqrt{122} = 2398 \text{ feet per second,}$$

and that from each of the other stages is

$$V_2' = .97 \times 223.7 \sqrt{19.8} = 965 \text{ feet per second.}$$

The velocity coefficients given in Fig. 51 have been used to lay out the triangles in **Figs. 53** and **54**. The application can be best illustrated by the triangles in Fig. 53, showing the velocities of the first stage.

For constructing the triangles in **Fig. 53**, V_2 is laid off inclined 20 degrees (the nozzle angle) to the horizontal and made to scale 2398 feet.

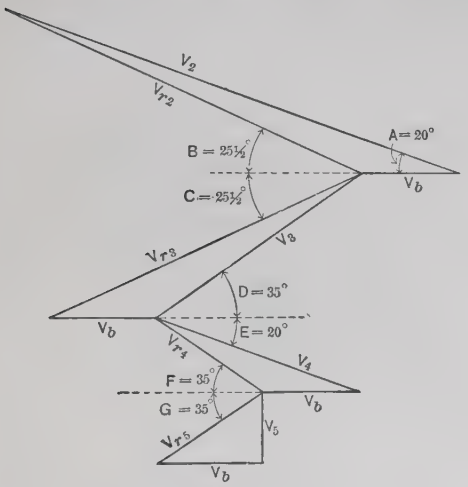

FIG. 53. Velocity Triangles for Two Velocity Stages in One Pressure Stage.

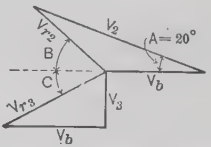

FIG. 54. Velocity Triangles for a Simple Impulse Wheel.

To the same scale the blade speed (V_b) is laid off for 500 feet, making the **relative velocity** (V_{r2}) in the first row of blades 1938 feet per second, and the entrance angle (B) of these blades is found to be $25\frac{1}{2}$ degrees. The entrance and discharge angles will be made equal, so that the angle C is also $25\frac{1}{2}$ degrees, determining the slope of the relative velocity (V_{r3}). The velocity coefficient taken from **curve A** in Fig. 51 for a relative velocity of 1938 feet is .88, so that $V_{r3} = 1938 \times .88$ or 1705 feet. V_b is again laid off in a horizontal direction, and the absolute velocity of the steam discharged from the first row of

blades (V_3) as read by the scale is 1270 feet, and the true discharge angle (D) is 35 degrees. In order that the steam may enter the **stationary intermediate blades** without shock, the entrance angle of these blades must be also 35 degrees, and the discharge angle (E) will be made 20 degrees, the same as the nozzle angle. The velocity coefficient is now read from **curve B** in Fig. 51 for 1270 feet,* which is .87, and V_4 is laid off for $1270 \times .87 = 1105$ feet. Completing the triangles, V_{r4} is 662, and the entrance and discharge angles F and G are each 35 degrees. The velocity coefficient (read from **curve B**) is .93, so that V_{r5} is 615 feet and the final discharge velocity (V_5) is 355 feet.

Velocities and blade angles are determined in the same way (by applying a velocity coefficient) for the 12 single wheel stages as shown in **Fig. 54.**

Data and results of these velocity triangles are tabulated below for convenient reference:

Blade Angles and Velocities of First Stage.

First row (moving): entrance and discharge angles $25\frac{1}{2}$ degrees.

Intermediate (stationary): entrance angle 35 degrees; discharge angle 20 degrees.

Second row (moving): entrance and discharge angles 35 degrees.

$V_b = 500$	$V_{r3} = 1938 \times .88 = 1705$	$V_{r4} = 662$
$V_2 = 2398$	$V_3 = 1270$	$V_{r5} = 662 \times .93 = 615$
$V_{r2} = 1938$	$V_4 = 1270 \times .87 = 1105$	$V_5 = 355.$

Blade Angles and Velocities of Second to Thirteenth Stages. Single row (moving): entrance and discharge angles $39\frac{1}{2}$ degrees.

$V_b = 500$	$V_{r3} = 525 \times .96 = 504.$
$V_2 = 965$	$V_3 = 339.$
$V_{r2} = 525$	

A slightly higher efficiency could have been obtained if the first stage pressure had not been assumed but had been determined

* In stationary blades the absolute and relative velocities are equal.

by a "cut and try" method to get the highest efficiency. If the energy for this stage had been a little less, the efficiency would have been increased — although an insignificant amount. It is a good rule to remember that with a **given blade speed, whenever** the line representing the residual velocity slopes toward either side of the vertical, the minimum residual velocity has not been found. A higher efficiency could have been obtained also by reducing the discharge angle of the intermediate blades. This angle is usually made about the same as the nozzle angle (about 20 degrees in most types). If it is made less than 20 degrees, although the apparent efficiency will be increased, there will be probably a greater loss than gain on account of the steam spilling over the blades.

Stage Efficiencies. Nozzle efficiency is assumed to be 97 per cent., on the basis of the **velocity** developed. Efficiency of the energy conversion in the blades can be calculated from the results given by the velocity triangles in **Figs. 53** and **54.**

In the first stage the velocity absorbed in moving the turbine is the initial velocity (V_2) less the residual velocity, (V_5), and the velocity losses in the blades are ($V_{r2} - V_{r3}$) and ($V_{r4} - V_{r5}$). Then the *energy absorbed* in the first stage,* or

$$\text{Work Done} = [V_2^2 - (V_{r2}^2 - V_{r3}^2) - (V_3^2 - V_4^2) - (V_{r4}^2 - V_{r5}^2) - V_5^2 \div 2g].$$

$$\text{Blade Efficiency} = \frac{\text{Work Done}}{\text{Work Possible}}$$

$$= \frac{V_2^2 - V_{r2}^2 + V_{r3}^2 - V_3^2 + V_4^2 - V_{r4}^2 + V_{r5}^2 - V_5^2}{V_2^2}.$$

$$\text{Blade Efficiency (first stage)} = \frac{(2398)^2 - (1938)^2 + (1705)^2 - (1270)^2 + (1105)^2 - (662)^2 + (615)^2 - (355)^2}{(2398)^2}$$

Blade Efficiency = 75.3 per cent.

Nozzle and blade efficiency of the first stage is therefore $75.3 \times (.97)^2$* = 70.8 per cent.

* When writing efficiency equations, it must be remembered that *efficiencies are proportional* to the available energies and *to the square of the velocities.*

Similarly for the second stage (also third to thirteenth stages) we have,

$$\text{Blade Efficiency} = \frac{V_2^2 - V_3^2 - (V_{r2}^2 - V_{r3}^2)}{V_2^2}$$

$$\text{Blade Efficiency} = \frac{(965)^2 - (339)^2 - (525)^2 + (504)^2}{(965)^2}$$

Blade Efficiency = 85.3 per cent.

Nozzle and blade efficiency of the last twelve stages is therefore $85.3 \times (.97)^2 = 80.3$ per cent.

The **combined or "total" nozzle and blade efficiency of the turbine,** prorated according to stage energy, is, then,

$$\frac{.708 \times 122 + .803 \times 12 \times 19.8}{122 + (19.8 \times 12)} = 0.77 \text{ or } 77 \text{ per cent.}^*$$

Besides the nozzle and blade losses, there are bearing losses, including the friction of the gland or stuffing-box on the shaft and the power for the governor and oil pumps, amounting to about 2 per cent in a turbine of this size.† The radiation loss is about 1 per cent, the loss due to leakage of steam along the shaft between the stages should not be more than 5 per cent., and the

* Although *velocity stages* do not give as high net blade efficiency, the adoption of this type for the first stage makes it possible, because of the *large available energy* required for this stage by this method, to make the turbine very economical at light loads. By providing a suitable valve gear the number of nozzles open *in the first stage* can be controlled by the governor. (See pages 305–318.)

† Bearing loss in turbines is usually very small. According to Lasche the friction coefficient (f) is

$$f = 2 \div (t \times p),$$

where t is the temperature of the bearing in degrees C. and p is the pressure in kilograms per square centimeter. The rotor of a 1000-kilowatt Parsons turbine weighs about 3000 pounds, and the disks and shaft of an impulse turbine would probably weigh less.

The bearing (journal) friction of a well-designed Parsons turbine is about .2 per cent., and the total friction loss including governor and oil pump rarely exceeds 1 per cent.

Stodola's tests of a Zoelly turbine, with, of course, a much shorter casing than that of a Parsons type, show the radiation loss from the casing to be about .7 per cent.

actual net loss of heat (" available ") due to rotation of disks and blades will be about 8 per cent.* The sum of the bearing, radiation, leakage, and rotation losses is then about 16 per cent., and the **efficiency of the turbine as measured by work done at the shaft** is about 77 per cent. (from page 110) less 16 per cent., or about 61 per cent.

The theoretical steam consumption (water rate) of a perfect engine operating with steam at the same initial pressure, superheat, and exhaust pressure is 10.24 pounds per kilowatt-hour.† Since the shaft efficiency is 61 per cent., the equivalent steam consumption per **shaft kilowatt-hour** developed in the blades is 10.24 ÷ .61, or 16.80 pounds. Generator efficiency might be assumed to be about 92 per cent. for a good design suitable for this high speed relatively to the size, and the steam consumption per kilowatt-hour "at the switchboard" would be about 16.80 ÷ .92 = 18.26 pounds.‡

The energy efficiency, neglecting losses, of each stage with a single row of blades can be expressed approximately by equation (**16**), thus,

$$\text{Efficiency} = \frac{4 \times 500}{965}\left(.940 - \frac{500}{965}\right) = 87 \text{ (nearly).}$$

The **nozzles for this turbine** must be designed to discharge at **full load** 300 × 18.26 pounds or 5478 pounds per hour at 50° F. superheat. Total " throat area " of the nozzles (A_0) can be calculated by equation (**5′**) for superheated steam, where

* The actual rotation loss for this design can be calculated by the formulas given in the following chapter. But a large part of the "total" loss as calculated becomes again available as the result of reheating. The mean pitch diameter of the blades is

$$\frac{500 \times 60}{3.1416 \times 3600} \text{ or } 2.65 \text{ feet.}$$

† A kilowatt-hour is equivalent to 2,654,400 foot-pounds or 3412 B.T.U. per hour (44,240 foot-pounds per minute). In this case the total available energy taken as one expansion is (1225 − 892) 333 B.T.U. per pound of steam, and the theoretical steam consumption is 3412 ÷ 333, or 10.24 pounds.

‡ Guaranteed steam consumption would be about 10 per cent. more than the estimated water rate. It is the usual practice of manufacturers of steam turbines and engines to add a percentage of about this value to allow for *possible* defective workmanship in construction.

$D = 50$ degrees, $F = 5478 \div 3600$, or 1.52 pounds per second, and $P_1 = 165$ pounds. Then

$$A = \frac{60F(1 + .00065D)}{P_1^{.97}} = \frac{60 \times 1.52 \times 1.0325}{(165)^{.97}} = .665 \text{ sq. in.}$$

The valve gear will be designed to open 8 nozzles for the first stage at full load, with provision for opening 4 more at overload, so that 50 per cent. overload can be carried efficiently by the turbine. These nozzles will all be of the same size. Each first stage nozzle will have a "throat area" of $.665 \div 8$, or .083 square inch. It will be assumed that the section of the nozzle at the throat is approximately square (with rounded corners) and that its **width** (in the radial direction with respect to the blade disk) **is constant from throat** to mouth, or is $\sqrt{.083}$, or .288 inch.

A calculation should now be made to determine the height of the blades to give sufficient area for the passage of the steam. For this purpose the length of the nozzles at their mouths must also be calculated. It is obvious that a nozzle cannot be designed to be cut off at the end of the expanding portion at right angles to its axis; but an extension or "tail" is necessary to direct the steam upon the blades. To avoid spreading the jet and making the expansion ratio uncertain, this "tail" is often made non-expanding, so that its wall is parallel to the axis. The **varying** dimensions of the nozzles for this design can be determined then from the **expansion ratio,** which, according to the curve in **Fig. 21,*** is approximately 1.52 for the expansion in the first stage nozzles. Area at the mouth is $.083 \times 1.52 = .1261$ square inch, but as one dimension is constant, the longer

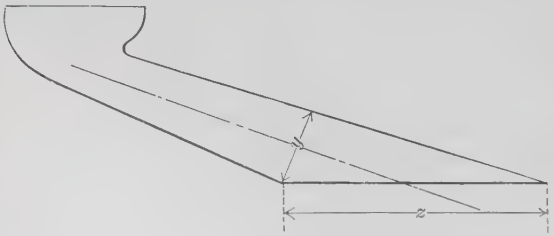

FIG. 55. Details of the Nozzle Mouth.

* Although the "expansion line" in this figure was calculated for dry saturated and wet steam it can be used with sufficient accuracy for cases in which the initial superheat is less than 100° F.

side of the rectangular mouth is .1261 ÷ .288, or .438 inch (marked **y** in **Fig. 55**). By the geometry of the figure it is obvious that the length **z = y ÷ sin 20 degrees,** if the nozzle angle is 20 degrees as it is generally made. Then the length of the nozzle mouth opposite the blades is **z** = .438 ÷ .342, or 1.28 inches.

Sufficient area must be provided in the blades to pass the steam from the nozzles. The pressure of the steam in the blades is 35 pounds per square inch absolute, of which the specific volume (dry) is 11.89 cubic feet. The weight of steam flowing per second is 1.52 pounds and the volume (x = .985) passing through the blades per second is approximately 11.89 × .985 × 1.52 = 17.8 cubic feet. This volume and the velocity of the steam determine the necessary **height** (**h'**) of the blades. Net area in square feet between the blades for passing the steam from eight nozzles may be written as $(8 \times 1.28 \times h' \times \sin 25\frac{1}{2}^\circ) \div 144$ (see page 100). This area multiplied by the relative velocity of the steam in the blades is another expression for the volume. Now the velocity of the steam in the blades, on account of the frictional losses, is variable. Obviously the blade area must be made large enough to pass the steam at its **lowest relative velocity**; that is, when it is discharging from the blades. The height of the first row of blades in the turbine (V_{r3} = 1705) is

$$h' = \frac{17.8 \times 144}{8 \times 1.28 \times \sin 25\frac{1}{2}^\circ \times 1705} = .34 \text{ (nearly)}.$$

After the angles and height of the blades * have been determined they can be laid out according to the diagram in Fig. 50.

The effective blade area should be calculated in the same way for every row of blades in each of the stages, as it is very important that the blades are provided with sufficient area.

DESIGN OF BLADES FOR A REACTION TURBINE.

The **rotor** of a "simple" Parsons turbine, except for marine services, is made commonly in three sections of different diameters.

* The other two rows of blades in this same pressure stage are calculated from equation above using respectively V_1 = 1105 (stationary blades) and V_{r5} = 615.

At the high-pressure end of a turbine of this standard type a section of small diameter is used, and the intermediate and low-pressure sections are made relatively larger to allow for the increased volume of the steam as it expands in the blades. In an impulse turbine, on the other hand, the blade wheels in the several stages are usually of the same diameter. This radical difference in the type of construction between impulse and reaction turbines becomes necessary because of the difference in the manner of admitting steam, which results from admitting in the reaction turbine high-pressure steam around the whole periphery of the rotating part, while in the impulse turbine the admission steam is discharged through nozzles, which in the high-pressure stages occupy usually only a small part of the periphery of the blade disks.

The passages along the blades in the Parsons reaction type are so proportioned that the pressure drop along the stationary blades produces a steam velocity which is enough greater than the blade speed to overtake the following moving blades. Hence a further pressure drop and steam expansion beyond that occurring in the stationary blades is necessary in the moving blades in order to produce the needed impulse to perform work. The steam passages along the moving blades are shaped, therefore, so as to permit this expansion.

Because of the expansion of the steam in the moving blades there is a difference of pressure between the two sides of every blade and every row of blades, thus in Fig. 95, page 225, the low-pressure section is at the right-hand side of the illustration and consequently the pressure is greater on the left-hand side of every row of blades than on the right. It follows then that the rotor is subject to an axial thrust,* which must be balanced in order to make the unit operative. There is also a leakage of steam around the tips of the stationary and moving blades which must be minimized. The fact that the steam admission is over the complete circumference accounts for the reduction of the diameter of the drum toward the high-pressure end, in

* In the example given, this thrust is exerted as a force pushing the rotor toward the right.

order to obtain blades of appreciable heights and also to reduce the steam leakage mentioned above (see Fig. 112i). The factors governing leakage and its influence on design will be discussed in detail in succeeding pages.

The effort to eliminate or reduce the difficulties enumerated above accounts for the various designs of reaction turbines now on the market. To eliminate axial thrust, the double flow arrangement shown in Fig. 184 and Fig. 112j has been developed for the larger sizes. To avoid small blade heights and to reduce leakage and axial unbalance in units of small or moderate size (500 to 12,000 kilowatts) accounts for the combined impulse and reaction type shown in Fig. 112g.

The diameter of the low-pressure section of the rotor of a reaction turbine is determined by the permissible blade speed and the rated speed of rotation (revolutions per minute). With a drum construction it is not permissible to adopt peripheral speeds for the rotor higher than about 600 feet per second. The speed of the rotor (revolutions per minute) will depend on the capacity of the turbine, or more particularly, if it is to be connected to an electric generator, on the allowable speed of the generator.

A table * on page 116 gives the rated speeds of a number of different sizes of commercial turbines of the Parsons type, some of which, it will be observed, are not for the standard frequencies of alternating current generators used in America. It is much more difficult to design an electric generator with as much strength in the rotating field or armature as in the turbine parts.

The diameter of the low-pressure section of a simple reaction turbine is generally made $\sqrt{2}$ times that of the intermediate section, and the diameter of the intermediate section is $\sqrt{2}$ times that of the high-pressure section. It follows then that the ratio of the blade speeds of successive sections is also $\sqrt{2}$.†

The speed of rotation of turbines direct connected to alternating-current electric generators is usually determined by the

* Trans. Inst. of Engineers and Shipbuilders (1905–06).

† In some recent American designs this ratio has been increased to more than 1.5 See designs on pages 162 to 165.

frequency of the alternating current. For the usual frequency in America for electric lighting (60 cycles per second) the generator must be operated at 3600, 1800, or 900 revolutions per minute; and for 15 cycles per second the revolutions cannot, of course, exceed 900 per minute, as a generator cannot be built with less than two poles.

Normal Output of Turbine.	Peripheral Blade Speed, Feet per Second.		Number of Rows of Moving Blades.	Revolutions per Minute.
	First Expansion (Section).	Last Expansion (Section).		
250 kilowatts	100	210	72	3000
500 kilowatts	120	285	60	3000
750 kilowatts	125	260	77	2000
1000 kilowatts	125	250	80	1800
1500 kilowatts	125	360	72	1500
2500 kilowatts	125	300	84	1360
3500 kilowatts	138	280	75	1200
5000 kilowatts	135	330	70	750

The **English** method of designing purely reaction turbines of the Parsons type will now be discussed. It will be observed that in this foreign engineering practice much lower blade speeds are used than in the designs just explained.

Usually in these English designs with three different diameters of the rotor (three sections), the number of rows of blades or stages is arranged so that one-quarter of the total work is done in the high-pressure section. The intermediate section takes also one-quarter of the total work, and the low-pressure section one-half.

Calculation of Number of Stages. The force **F** on a moving blade in the direction of motion is for **W** pounds of steam flowing per second, **Fig. 55a** * as follows:

$$\mathbf{F} = \frac{\mathbf{W}}{\mathbf{g}} (\mathbf{V}_2 \cos \alpha + \mathbf{V}_3 \cos \beta). \dagger \qquad (27)$$

* Fig. 55a is constructed on the assumption that the stationary and moving blades in a stage are to be similar in outline and angles. The triangles as shown at the entrance and exit sides of the moving blade are then equal with corresponding angles indicated. (See Morrow's *Steam Turbine Design*, page 114.)

† The absolute rather than the relative velocities are chosen for this discussion because they are more adaptable for the simplification of algebraic equations.

Work done by **W** pounds of steam per second is in **foot-pounds per second** per stage,

$$\frac{\mathbf{W}}{\mathbf{g}}(\mathbf{V}_2 \cos \alpha + \mathbf{V}_3 \cos \beta)\, \mathbf{V}_b. \qquad (27a)$$

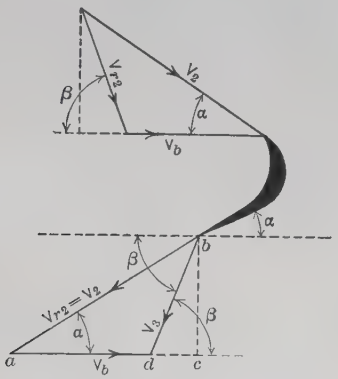

FIG. 55a. Diagram for Calculation of Number of Stages.

Work done per pound of steam in foot-pounds per second per stage is, then,

$$\frac{1}{\mathbf{g}}(\mathbf{V}_2 \cos \alpha + \mathbf{V}_3 \cos \beta)\, \mathbf{V}_b. \qquad (27b)$$

The following relation is also easily established

$$\mathbf{V}_b = \mathbf{V}_2 \cos \alpha - \mathbf{V}_3 \cos \beta.$$

Work per pound of steam, foot-pounds per second per stage, can then be written in the form

$$\frac{1}{\mathbf{g}}(\mathbf{V}_2^2 \cos^2 \alpha - V_3 \cos^2 \beta). \qquad (27c)$$

The following trigonometric relations are obvious:

$$\sin \beta = \frac{\mathbf{V}_2 \sin \alpha}{\mathbf{V}_3}\ ;\ \sin^2 \beta = \frac{\mathbf{V}_2^2 \sin^2 \alpha}{\mathbf{V}_3^2}\ ;\ \text{and}$$

$$\cos^2 \beta = 1 - \frac{\mathbf{V}_2^2 \sin^2 \alpha}{\mathbf{V}_3^2}.$$

Substituting this last value in equation (27c) we have

Work per pound of steam (foot-pounds per second)

$$= \frac{1}{g}(V_2^2 \cos^2 \alpha - V_3^2 + V_2^2 \sin^2 \alpha)$$

$$= \frac{1}{g}[V_2^2 (\cos^2 \alpha + \sin^2 \alpha) - V_3^2]$$

$$= \frac{1}{g}(V_2^2 - V_3^2). \qquad (27d)$$

The last equation might have been written directly in kinetic energy relations, without the preceding steps.

Using the right-angled triangle (bcd), of which V_3 is the hypotenuse,

$$V_3^2 = V_2^2 \sin^2 \alpha + (V_2 \cos \alpha - V_b)^2$$
$$V_3^2 = V_2^2 \sin^2 \alpha + V_2^2 \cos^2 \alpha - 2\, V_2 V_b \cos \alpha + V_b^2$$
$$V_3^2 = V_2^2 - 2\, V_2 V_b \cos \alpha + V_b^2. \qquad (27e)$$

Substituting (27e) in (27d) there results,

Work per pound of steam per stage (foot-pounds per second)

$$= \frac{1}{g}(V_2^2 - V_2^2 + 2\, V_2 V_b \cos \alpha - V_b^2)$$

$$= \frac{V_b}{g}(2\, V_2 \cos \alpha - V_b). \qquad (27f)$$

The ratio $\frac{V_2}{V_b}$ is often represented by k, then

Work per pound of steam per stage (foot-pounds per second)

$$= \frac{V_b^2}{g}(2\, k \cos \alpha - 1). \qquad (27g)$$

This value can be equated to the mechanical equivalent of the total heat available E_a (assuming no frictional losses and no heat drop) or

$$\frac{V_b^2}{g}(2\, k \cos \alpha - 1) = \frac{E_a \times 778}{N},$$

where N is the number of stages in the section or the turbine,

as the case may be, in which the available energy $\mathbf{E}_a$ is utilized. Solving for **N**, we have

$$\mathbf{N}^* = \frac{\mathbf{E}_a \times 778 \times g}{\mathbf{V}_b^2 (2\,\mathbf{k} \cos \alpha - 1)}. \qquad (27h)$$

If the **heat drop** and the average **value of k** are assumed to be the same in each expansion or stage, and **blade angles** are also approximately constant, then

$$\mathbf{NV}_b^2 = \mathbf{a\ constant.} \qquad (27i)$$

Example. Make approximate calculation of the number of stages (**N**) for the high-pressure section of a steam turbine in which the heat drop in the section is 200 B.T.U. per pound of steam, assuming $\mathbf{k} = 2.5$, $\cos \alpha = .94$, $\mathbf{V}_b = 200$, and efficiency of energy transformation is 70 per cent.

Using equation (**27h**), corrected for efficiency, we obtain

$$\mathbf{N} = \frac{.70 \times 200 \times 778 \times 32.2}{(200)^2 (2 \times 2.5 \times .94 - 1)} = 23.7.$$

Designers of **marine turbines** usually assume the value of the **constant** in equation (**27i**) above at about 1,500,000 to 1,600,000; but for **electric generator service,** where much higher peripheral speeds are allowable, the value of this constant varies from 2,200,000 to 2,600,000, depending somewhat on the allowable radial clearances. The lower value can be used when the machine work is accurate and the designing has been done with great care to eliminate unequal expansion between the rotor and the casing (see page 136).

Gauging Blades. It sometimes happens when arranging the blading in groups, that a fractional part of a stage is shown by the calculations. In such a case two groups may be combined

* Observe that no losses have been allowed for in the discussion of the equations leading to this result. In actual calculations of designs a coefficient of efficiency, usually .70, is inserted in the numerator as in the example following. The expression $\mathbf{NV}_b^2$ has useful applications in coordinating results of tests on a complete line of machines and in obtaining good approximations of efficiencies for new designs.

into one of about the average height, if in this way a whole number of rows can be secured.

In fact it is a customary construction of the blading of reaction steam turbines to slightly change the discharge angle of the blades in the rows at the low-pressure end of the rotor by **gauging** the blades in both the rotor and the casing. The object of this adjustment of blade angles is to permit the use of shorter blades than would be required if the angles calculated in the design were used.

The gauging of reaction blades has also come to have a significant meaning in the description of reaction blades, which are often classified according to the gauging which, in this sense, is taken to mean the ratio of the net area for the flow of steam to the area of the annular space occupied by the row of blades in a ring extending all the way around the rotor. For example, if a type of reaction blading is called a " twenty-five per cent. gauge," it means that the net area for the flow of steam through the blade is 25 per cent. of the annular space occupied by a row of blades extending all the way around the rotor.

Now if a blade of " 25 per cent. gauge " is gauged so that it becomes a " 20 per cent. gauge " by the method of reducing the discharge angle of the reaction blades, it would have the effect, of course, of closing up slightly the area available for the flow of steam. On the other hand, reaction blading of " 25 per cent gauge " can be changed to " 30 per cent. gauge " by opening up the spaces at the discharge end of the blades so that the discharge angle becomes larger. The effect of gauging is very well illustrated in Fig. 55b, which shows 20 per cent. and 30 per cent. gaugings.

A person doing the gauging on reaction blades does not actually measure the angles as given on the drawing but uses a special measuring instrument which is called a " gauging feeler," which is used to determine the proper opening between the blades to correspond to a required per cent. of gauging.

Gauging the angles at the discharge end of reaction blades has the important advantage of cheapening the construction of the

blades as it is possible, for example, by this method to set up three groups of blades exactly alike and then by the method of gauging to change the setting of the blades in the two outer groups so that the angles in the three groups will be correct for the required expansion of steam. In applying this construction,

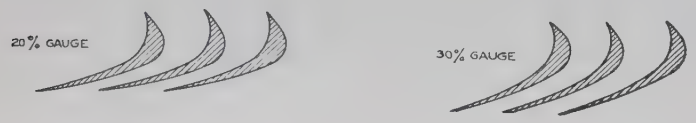

FIG. 55b. Gauging of Blades.

the middle group of a series of rows in three groups is set up so that the discharge angles are correct according to the design of the blades and the preceding and the following groups of blades are made exactly the same as the middle group in the original setting up. Later the discharge angles of the group which first receives the steam are changed by gauging so that the space between the blades at the discharge end is a little smaller than it was in the original setting up. In other words the blades are closed somewhat at the discharge end. Similarly the third group, or the one in the series through which the steam discharges last, is gauged so that the amount of opening between the discharge ends of the blades is increased.

This method of gauging reaction blades is a somewhat crude manufacturing process, and there is now a tendency to set up the blades of each row or group accurately to the size of the angle which is required.

Manufacturers using steel blades have usually special keys made for twisting the blades by hand both for the purpose of "gauging" and for changing the blade angles in order to secure an accurate balance between the **end thrust** of the **balance pistons** (see page 222) and that of the blades. It is stated on very good authority that this twisting of the blades and changing the angles for the purpose of balancing end thrust as much as 5 degrees does not appreciably alter the economy of the turbine.

In the last rows of the low-pressure section the discharge or outlet angle (γ in **Fig. 47b**) is invariably increased beyond the calculated value to permit the flow of a large amount of steam through the blades without choking and still maintain a constant blade height in these rows. It has been shown that the area of the passage for steam at the discharge side of blades is $\pi D \sin \gamma \times h$,* if blade thickness is neglected. Hence, with constant values of D and h, an increase in the value of the discharge angle γ is an increase in the area for the flow of steam. It is thus easily possible to avoid inconveniently long blades in the low-pressure section by increasing γ and keeping the blade height constant.

It will now be shown how the angles required to maintain constant blade height can be calculated if the actual specific volume of the steam in the various rows of blading can be determined. The volume of steam flowing in cubic feet per second is $\pi D \sin \gamma \times h \times V_{r2}$.† And if **v** is the specific volume of the steam and **W** is the flow through the blades in pounds per second, we have

$$\mathbf{V_{r2} \pi D h \sin \gamma = W v.} \qquad (28)$$

For the expansions (stages) in which **W**, **D**, and **h** are to be constant, the equation simplifies to

$$\mathbf{V_{r2} \sin \gamma \text{ proportional to } v.} \qquad (28a)$$

It is desirable in such cases to have constant values for the component of the velocity ($V_{r2} \cos \gamma$)‡ of the approaching steam in the direction of rotation of the blades; that is, in the direction of V_b. In other words V_{r2} = a constant ÷ $\cos \gamma$. Making this substitution, we have

$$\frac{\sin \gamma}{\cos \gamma} = \tan \gamma \text{ proportional to } v. \qquad (28b)$$

* See page 100. This is for steam flow over the *whole* periphery as is customary in reaction turbines.

† V_{r2} is the "relative" velocity in the blades as used in Fig. 47b.

‡ Morrow's *Steam Turbine Design*, page 119. $V_{r2} \cos \gamma$ is sometimes called the "velocity of whirl" at the entrance to the blades.

When the average value of **v** is known, in the stage preceding those to be gauged, equation (**28b**) is used to calculate values of γ for the corresponding values of **v** of the steam in the gauged blades.

The following example illustrates the method. Assume the specific volumes of the steam in the last three stages of a reaction turbine are respectively 90.5, 143, and 230 cubic feet per pound, and that the blade angle for the first row of this group is normal (without gauging) and that $\gamma = 20°$.

Now represent the discharge angles to be calculated by γ' and γ''. Then $\tan \gamma' \div \tan 20° = 143 \div 90.5$ or $\gamma' = 30°$ (nearly). Also $\tan \gamma'' \div \tan 20° = 230 \div 90.5$ or $\gamma'' = 43°$ (nearly). It has been thus determined that the discharge angles for the last two rows are to be 30° and 43°. Blades which have been adjusted in this way to increase, above the normal, the discharge angles are called **wing blades.**

Considerations in Designing. An example illustrating the design of a commercial type of reaction turbine will now be discussed.

The difficult part and that requiring the best judgment in the designing of a reaction type of steam turbine is in determining as accurately as possible the volume of steam that will pass through the blades for its full capacity; that is, when all the valves controlling the admission of steam are wide open; or in other words when there is no throttling of the steam pressure. It is for this flow that all the blades must be proportioned for their best efficiency. It is presumed that for both lighter and heavier loads the efficiency and the steam consumption will not be so good. In order to determine the volume of steam flowing at this condition obviously the actual number of pounds of steam to be used by the turbine must first be known.

As the result of a great deal of study the curve shown in **Fig. 55c** has been developed from data collected in a large part by Martin* as applying to a large variety of turbines, but particularly to the reaction type. This curve shows by its ordinates the so-called "efficiency ratio," which is the ratio of the theo-

* *Design and Construction of Steam Turbines.*

retical steam consumption (see page 31) to the **actual** steam consumption (water rate) per kilowatt-hour. The values on this curve for values of the coefficient " C "* from 110,000 to 120,000

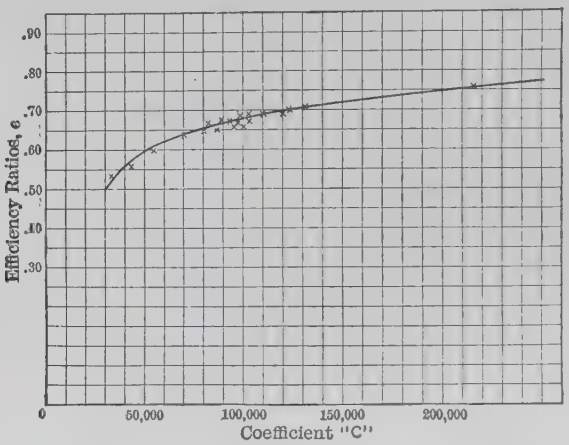

FIG. 55c. Efficiency Ratios as Designing Coefficients for Reaction Turbines.

are for reaction turbines either above 5000 kilowatts' capacity, or else for sizes between 1500 to 5000 kilowatts which have **clearances at the tips of the blades too small for standard practice**. Many of the turbines of the latter or small sizes did, in fact, strip their blades a short time after being put into service. Values less than 100,000 are for sizes smaller than 1500 kilowatts. Other things being equal the smaller size turbine should have a lower value of the coefficient. Thus for a turbine of 1000 kilowatts' capacity the proper coefficient should be between 80,000 and 90,000 and for a 2000 kilowatt size the coefficient should be about 100,000. In fact the latter value is generally used by careful designers of Parsons types for all sizes from 1500 to 5000 kilowatts, having **reasonably large** clearances at the tips of the blades.

When in the case of a turbine of large output, the maximum permissible diameter is reached in the low-pressure stages, this portion of the turbine must be made according to one of the

* Values of this coefficient should not be confused with the "constant" given on page 119.

multiple-exhaust designs, as for example, double-flow (**Fig. 107**), uni-directional double-flow (**Fig. 112 o**), Baumann blading (**Figs. 112l and 112m**), or separate high-pressure and low-pressure cylinders.

Several advantages are gained by the arrangement employing a separate cylinder for the low-pressure stages. In a very large turbine a single cylinder requires a very long span between the end bearings; and a tandem double-flow design as shown in **Fig. 112j** makes it possible to place a mid-bearing between the high-pressure and the low-pressure stages A short stiff rotor is then obtained in each cylinder of the turbine.

Practical Example. A reaction turbine with a drum rotor of three sections is to be designed to give a rated output of 2000 kilowatts, operating at 1500 r.p.m. When supplied with steam at 165 pounds absolute pressure, 100° F. superheat, and 1 pound absolute exhaust pressure (about 28 inches vacuum), the turbine will carry 10 per cent. overload before the by-pass or overload valve (see page 335) opens.

For this design (2000 kilowatts), therefore, the value of the coefficient should be 100,000. Ordinates of the curve in **Fig. 55c** show that the corresponding efficiency ratio is about .675.

The available energy from the **entropy-total heat** chart from the initial conditions of 165 pounds per square inch absolute pressure and 100° F. superheat to the final pressure of one pound absolute is 1252 − 908 or 344 B.T.U. per pound of steam. Dividing the B.T.U. equivalent of a kilowatt-hour, which is 3412, by the **available energy** per pound of steam (344) we obtain a theoretical steam consumption of 9.92 pounds. This theoretical steam consumption divided by the efficiency ratio gives the actual steam consumption of the turbine per kilowatt-hour as measured at the turbine shaft or 9.92 ÷ .675 is 14.69 pounds. If we assume 5 per cent. loss for generator and connections to the switchboard then the steam consumption per kilowatt " at the switchboard " is 14.69 ÷ .95 or 15.46 pounds of steam when dry saturated.

If the steam is superheated, as in this case, the steam con-

sumption of reaction turbines is reduced, further, at least 6 per cent. for 100° F.* (see page 193), so that the actual number of pounds of steam to be passed through the turbine for the conditions stated for this design is $15.46 \times .94$ or 14.54 pounds per kilowatt per hour " at the switchboard."

The turbine must be designed for a total steam consumption of $14.54 \times 2000 \times 1.10 = 31{,}993$ pounds per hour or 8.88 pounds per second at **maximum output** (10 per cent. overload), when the admission valve will be wide open so that there is no throttling. Then the steam entering the first row of blades will be at 165 pounds absolute pressure, of which the volume at 100° F. superheat is 3.21 † cubic feet per pound. The **volume of steam admitted to the turbine per second is** $3.21 \times 8.88 = 28.50$ **cubic feet,** and just as in the design of impulse turbines, the blades must be designed for the passage of this amount of steam.

The blades are designed by determining the entrance and discharge angles by velocity triangles like those in **Fig. 46** after the available energy for each stage has been calculated. Some designers make their calculations for the rated full load conditions and not for the maximum output obtained just before the stage valve opens. The difference between the two methods is that until the maximum output is reached, without opening the stage valve, there is obviously some throttling in the admission valve,‡ and when designing for full load conditions this throttling must be allowed for. For this reason it is **preferable to design**

* Two allowances for superheat are thus made. The steam consumption as calculated above was determined by using the theoretical available energy including the superheat. The correction which is now made is to compensate for the effect of superheating in reducing rotation losses.

† Marks and Davis' *Steam Tables and Diagrams*. In these tables the specific volumes have been calculated by Knoblauch's equation, which gives considerably larger values than equation (9). The results of different investigations do not give any sort of agreement, the rate of increase of volume with superheating varying as much as 100 per cent. It is usually stated that the specific volume of superheated steam is 15 per cent. larger for 100° F. of superheat than that of dry saturated steam. According to Knoblauch's equation used by Peabody, this percentage is about 17, and according to equation (9) it is about 13.

‡ There is some throttling even in the " blast " or " pulsating " valves (page 323) used in nearly all types of Parsons turbines.

for maximum output when the admission valve must be wide open.* The available energy is then calculated by steps from the rated admission to the exhaust pressure. This available energy might be determined for every stage as it is done for designing impulse turbines, but this is unnecessarily laborious, as the pressure drop is so small. Approximately the same result is obtained by calculating assumed expansions in stages of 10 B.T.U. with the same reheating factors as would be used for the same size of impulse turbine. For a 2000 to 3000 kilowatt size the reheating (page 104) should be not much more than 30 per cent. Assuming this value, the total available energy as read from the entropy-heat chart with reheating for every 10 B.T.U. from 165 pounds absolute and 100° F. superheat to 1 pound absolute exhaust is 260 B.T.U.† Without considering reheating it would have been 343 B.T.U.; but with 30 per cent reheating as if in only one "step" it is only 240 B.T.U. The quality of the steam in the last stage after reheating "by steps" of 10 B.T.U. is .886.

For this design it will be assumed that in using equation (**27i**) on page 119,

$$N V_b^2 = 2{,}560{,}000.$$

It has already been stated that the diameters of the sections of the rotor of this type of reaction turbine increase as $\sqrt{2}$; and as

* The steam consumption at full and fractional loads can be estimated by drawing a "Willans" line of total steam per hour (page 184). Unless the design of a steam turbine is radically wrong, usually because of insufficient area of the steam passages, which is called "choking" the steam, it has been shown by experience that the points representing total steam per hour plotted against fractional loads will be on a straight line from no load to the maximum output (without a stage valve). At no load a Parsons turbine usually takes one-eighth of the total quantity required at the normal maximum output. By plotting these two points (no load and maximum output) and joining them with a straight line, the total steam consumption at all other loads can be read and the steam per kilowatt-hour or per horsepower-hour can be calculated with considerable accuracy.

† This available energy should be read in the same way as for the design of the impulse turbine illustrated in Fig. 52; meaning, that the energy should be obtained by subtracting from the total heat at the initial condition of pressure and superheat, the total heat at the final pressure, *without the last reheating*. There are some designers of *impulse turbines*, however, who use the calculated net available energy after reheating in each stage; but the problem then becomes very complicated, as most of the reheating takes place after the steam is discharged from the nozzles or stationary blades.

the blade speeds must increase in the same proportion as the diameters, the following **speeds of the blades** will be assumed, which are not at variance with good practice:

V_b of first section of rotor = 140 feet per second.
V_b of second section of rotor = 200 feet per second.
V_b of third section of rotor = 280 feet per second.

The value of peripheral speed, 140 feet per second for the first section of the rotor, corresponds at the speed of rotation required (1500 revolutions per minute) to a diameter of

$$\frac{140 \times 60}{3.1416 \times 1500} = 1.78 \text{ feet or } 21.36 \text{ inches.}$$

It is stated by Martin that English designers of reaction turbines for land service between 1000 and 6000 kilowatts' capacity determine the diameter of the first section of the drum of the rotor d_1 by the following empirical formula based on experience:

$$d_1^3 = \frac{410{,}000\, w v_0}{\text{r.p.m.}},$$

where w is the weight of steam flowing through the turbine in pounds per second at maximum output without the stage valve being open, and v_0 is the specific volume of the steam at the condition it enters the turbine in cubic feet per pound. In this case the diameter of the first section of the rotor as calculated by this formula would be

$$d_1^3 = \frac{410{,}000 \times 8.88 \times 3.21}{1500} = 7790,$$

and d_1 is $\sqrt[3]{7790}$ or 19.8 inches, which agrees well with the value calculated (21.36 inches) from the assumption of a satisfactory peripheral speed. Actually it is better practice and certainly more rational to assume a safe peripheral speed than to determine the diameter by formulas having important empirical coefficients which must vary necessarily considerably with the type of the design. Allowable peripheral or blade speeds are always about the same for a given speed and type of construction. Limits as regards peripheral speeds can be as accurately determined as any other problem in the designing of machines.

A similarly empirical formula is sometimes used by designers of reaction turbines to determine the least permissible diameter

of the low-pressure section in the last stage, with the object of reducing to a minimum the losses due to excessive residual velocity of the steam as it discharges into the exhaust pipe. If the diameter of the rotor measured to the middle of the blades in the last stage is $\mathbf{d}_z$ then for this reason $(\mathbf{d}_z)^2$ should be not less than .57 × the output when there is no throttling in the main inlet valve. In this case then, for 10 per cent. overload,

$$\mathbf{d}_z^2 > .57 \times 2000 \times 1.10 \text{ (see page 126)},$$

or $\mathbf{d}_z$ must be at least 32.07 inches, which corresponds to a peripheral speed of $\frac{32.07 \times 3.1416 \times 1500}{12 \times 60}$, or 210 feet per second. The value selected for this stage (280 feet per second) from the viewpoint of permissible stresses is well above this minimum limit. Blade speeds as high as 600 feet per second are now used in some **American** designs of steam reaction turbines in large sizes.

Having determined that the conventional blade speeds are very satisfactory for this design the required number of reaction stages will be calculated in the usual manner as follows:

If the blade speed of the whole turbine had a constant value of 140 feet per second, then

$$(140)^2 \times N = 2{,}560{,}000;\ N = 128 \text{ (nearly)}.$$

As, however, only one-fourth of the work is to be done by the first section * operating at this blade speed, the number of stages in the first section is $\frac{128}{4} = 32$. The value of N for the second section is 64; and as one-fourth of the work is done also in this section, the number of stages is 16. For the third section N is 32, and since one-half of the work is done in this section, the number of stages is 16.

Each section of the rotor is commonly divided into two or four groups or " expansions."

Reaction turbines are usually designed for equal work (energy) per stage for a given section of the rotor. In the high-pressure or first section, one-quarter of the work is done, and the available energy for each of its thirty-two stages is 260 B.T.U. ÷ (4 × 32) = 2.03 B.T.U. Similarly the available energy for

* See page 116.

each stage of the intermediate section is 260 B.T.U. ÷ (4 × 16) = 4.06 B.T.U.; and for each stage of the low-pressure section is 260 B.T.U. ÷ (2 × 16) = 8.13 B.T.U. It may be assumed that about one-half of the available energy in each stage produces velocity in the stationary blades and the other half in the moving blades. The theoretical angles are determined from velocity triangles, applying the coefficients from curve *B* in **Fig. 51,** by the usual methods as explained for impulse turbines. The discharge angles for all the stages except the last groups in the low-pressure section will be assumed to be 20 degrees. The angles for the last stages will be made 45 degrees. It is obvious, of course, that the discharge angle is always the same as the "absolute" angle at which the steam enters the succeeding row of blades. In this design no allowances are made for probable **"gauging"** of the blades to adjust the thrust on the rotor or for other reasons.* The velocity of the steam leaving the first row of stationary blades in the high-pressure section is about 225† feet per second. A *net* area of 28.50 cubic feet ÷ 225, or .127 square feet, or 18.2 square inches, is required to pass the steam. As the discharge angles of the blades in the high-pressure and intermediate sections are to be made 20 degrees, that value will be taken for this design, and the actual area of the blade ring will be approximately 18.2 ÷ .342,‡ or 53.3 square inches.

The blade speed of the high-pressure rotor is 140 feet per second,§ so that the mean diameter of the blade ring is

* It has been stated that some makers of marine turbines who have not had much experience in building them will often design turbines to give considerably larger output than is intended for the service and then reduce the output to the required rating by "gauging" the blades.

† In a reaction turbine the maximum velocity in each stage is attained when the steam is discharged from the stationary blades. Although there is expansion also in the moving blades, more velocity is absorbed in them than is produced, and the velocity of the steam discharged from the moving blades is considerably less than 225 feet per second.

‡ The total area of the annulus for blades with discharge angles of 20 degrees is the net required area divided by sin 20 degrees (see Fig. 49). Practical designers often call the sin of 20 degrees one-third and make the area of the annulus three times the net required area.

§ Manufacturers generally appreciate the gain from operating at high peripheral speeds of the rotor. To-day efforts are directed generally by all makers of direct-connected turbine-generators to improve the mechanical construction of the generator to run at higher speeds.

$\frac{140 \times 60}{1500 \times 3.1416} = 1.78$ feet, or 21.4 inches, and the height of the first row of blades on the rotor is approximately 53.3 square inches $\div$ 21.4 $\times$ 3.1416 = .80 or nearly $\frac{13}{16}$ inch (see table, page 132).

With full rated pressure in the admission chamber about 7 per cent. of the total steam **leaks through** the " dummies " or **balance pistons** * at the high-pressure end of the turbine. This leakage as well as that around the tips of the blades through the **radial clearance** is not considered here in the calculations. It is probable, however, that the amount of this leakage is quite sufficient to allow for the thickness of the blades on the discharge side.† The volume of the exhaust steam (1 pound per square inch absolute pressure and .886 quality) is 297 cubic feet per pound. Initially the volume was 3.215 cubic feet per pound, so that the volume in the last row of blades is 92.5 times that at admission. Since one-fourth of the work is done in the blades of the first section, one-fourth of the total expansion occurs in them, or the volume entering the second section is $\sqrt[4]{92.5}$,‡ or 3.10 times the original volume. Since the mean diameter is to be made $\sqrt{2}$ times that at the high-pressure end and the steam velocity is to be also $\sqrt{2}$ times as great so as to correspond with the increase in blade speed (which is $\sqrt{2}$ times that in the first section. See page 115), the height of the blades in the first row of the intermediate section will be $\frac{3.10}{\sqrt{2} \times \sqrt{2}} = 1.55$ times that of the first row in the high-pressure section. Similarly the blade height for the first row of the low-pressure end will be 1.55 times that of the first row of the intermediate section. Each of these sections will be divided into four groups or " expansions." Since the volume is increased four times for each section, the blade height of each

* Methods of calculating the leakage through the *balance pistons* and that through the *radial clearance of the blades* in reaction types are discussed on pages 160–163.

† Thomas uses a coefficient of 1.5 to increase the area of the blades to allow for the thickness at the discharge side. If the blades are made thin at their edges, as in good designing, it is not customary to use a coefficient " for the thickness of the blades."

‡ Let v' = volume at end of third section,
v_1 = volume at beginning of first section
x = number of expansions,
then $v' = v_1^x$, and $v_1 = \sqrt[x]{v'}$.

of the high-pressure and intermediate groups will be $\sqrt[4]{3.10}$, or 1.33 times as large as in the preceding one.

The calculated blade heights for each of the four groups of the high-pressure and intermediate sections are given in the following table:

	Group Number.			
	1	2	3	4
Blade height, high-pressure section	$1\frac{3}{16}$	$1\frac{7}{16}$	$1\frac{7}{16}$	$1\frac{15}{16}$
Blade height, intermediate section	$1\frac{1}{4}$	$1\frac{5}{8}$	$2\frac{3}{16}$	$2\frac{13}{16}$

Blade heights are adjusted to sixteenths, although in practice the nearest eighth is commonly used.

Because of the long blades in the low-pressure section they will be made in eight groups. The height of the first group will be 1.55 times the height of the first group of the intermediate section.

The volume entering the third section is $\sqrt[4]{92.5} \times \sqrt[4]{92.5} = 9.61$ times the original volume, and blade height in first row of third section is $1.55 \times 1.55 \times$ height of first row $= (1.55)^2 \times .80 = 1.9$ inches, or approximately $1\frac{15}{16}$ inches.

Each blade in third section is $\sqrt[8]{9.61} = 1.33$ times height of preceding one, or the height of second row is $1.33 \times 1\frac{5}{16}$ or 2.57 (approximately $2\frac{9}{16}$ inches). The results are tabulated as follows:

	Group Number.							
	1	2	3	4	5	6	7	8
Blade height (inches)	$1\frac{15}{16}$	$2\frac{9}{16}$	$3\frac{7}{16}$	$4\frac{9}{16}$	$6\frac{1}{16}$	$8\frac{1}{8}$	$10\frac{3}{4}$	$14\frac{3}{8}$

Martin states that at the **high-pressure end** (in turbines for stationary service) it is desirable to limit the **blade height** to **not less than** one-twenty-fifth ($\frac{1}{25}$) of the drum diameter. If the blades are shorter than this the loss by leakage around the tips may become excessive. In marine turbines the high-pressure blades in the first section are only $\frac{1}{75}$ of the drum diameter. On this basis the blade heights might be slightly increased.

At the low pressure end of the turbine the length of the blades would be considered excessive in practice. It is a rule generally followed by designers of reaction turbines not to make the greatest blade height more than one-sixth the mean diameter of the blades for the section considered. The mean diameter of the low pressure section is $21.4 \times \sqrt{2} \times \sqrt{2} = 42.8$ inches. In this case the maximum height would be, therefore, about 7.1 inches. In order to reduce the length of the blades so that

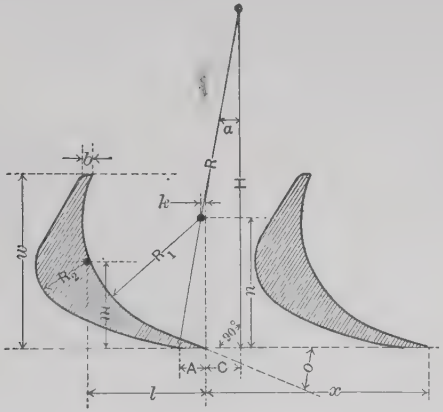

FIG. 56. Details of the Design of Reaction Blades.

practical requirements shall not be exceeded, the discharge angle of the blades must be made greater than 20 degrees. Such blades with enlarged "exit" angles are called **wing blades.** The tangent to the curve at the back of the blade on the entrance side becomes about 90 degrees, and at the discharge side 45 degrees instead of 20 degrees. As the result of this change, the net area for the passage of the steam is .71 * (sin 45 degrees) instead of the standard "$\frac{1}{3}$" † of the annulus without blades. Wing blades 7 inches long can be used to replace satisfactorily the blades in the 5th group; but as those of the 6th, 7th, and 8th groups must

* In the turbines of the steamer Mauretania, wing blades giving a passageway of .86 of the annulus were used, but such a large degree of "winging" is not adopted in steam turbines for electric generators.

† The sin of 20 degrees is .34, but practical designers take it often for convenience in calculating as $\frac{1}{3}$.

be made of the same length, these blades will be shorter than they should be. This constriction of the steam passage, however, cannot well be avoided without making the rotor in four diameters.

Fig. 56 shows how the blades of reaction turbines are laid out. As explanatory of this figure a table is given below showing the corresponding dimensions used by one manufacturer. In the table data for five standard blades are given for varying discharge angles (o) from 20 degrees to 35 degrees and blade widths (w) of .25, .375, and .50 inch. All the linear dimensions are given in inches. β is the entrance angle of the blades.

Blade Number (Arbitrary).

	1	2	3	4	5
o	20	20	20	30	35
α	10°	9° 30′	14° 30′	15° 45′	18° 40′
w	0.25	0.375	0.50	0.50	0.50
β	67° 30′	67° 30′	67° 30′	60°	60°
R	0.485	0.555	0.794	0.804	0.810
A	0.035	0.045	0.068	0.050	0.040
b	0.020	0.020	0.020	0.020	0 020
R_1	0.172	0.260	0.342	0.313	0.304
C	0.049	0.040	0.110	0.147	0.218
R_2	0.070	0.109	0.164	0.210	0.212
k	0.008	0.010	0.015	0.040	0.056
m	0.123	0.185	0.288	0.280	0.280
n	0.185	0.280	0.383	0.332	0.330
l	0.166	0.223	0.282	0.156	0.134
H	0.478	0.552	0.770	0.770	0.770

Another table is given here showing the principal dimensions of a 400-kilowatt reaction turbine with 3, 4, and 5 groups per section. The blade numbers in this table refer to the corresponding numbers in the table above. This table is particularly useful for showing values assumed by designers for the **blade pitch.** It is not considered practicable in this type of blade construction to use a smaller pitch than .177 inch when a calking tool must be inserted between the blades. Manufacturers have usually curve sheets of empirical data from which the pitch and other standard dimensions are obtained.

FIRST SECTION.

Number of Group.	Diameter of Section in Feet.	Discharge Angle.	Blade Height in Inches.	Blade Number	Volume Cubic Feet per Pound.	$V_b \div V_2$	Blade Pitch.	Number of Blades.
1	0.84	20	0.6875	1	4.08	.62	0.177	179
					5.6		0.25	127
2	0.84	20	1.00	1	5.6	.62	0.1875	169
					7.38		0.2475	128
3	0.84	20	1.25	1	7.38	.62	0.172	184
					8.92		0.2175	146

SECOND SECTION.

1	1.187	20	0.6875	2	8.92	.62	0.20	180
					10.63		0.31	116
2	1.187	20	0.9375	2	10.63	.62	0.215	207
					13.8		0.3075	144
3	1.187	20	1.2	2	13.8	.62	0.215	207
					18.8		0.323	158
4	1.187	20	1.75	2	18.8	.62	0.208	214
					26.6		0.326	137

THIRD SECTION.

1	1.88	20	0.9375	2	26.6	.62	0.208	340
					35.8		0.307	230
2	1.88	20	1.3125	2	35.8	.62	0.208	340
					52.8		0.339	210
3	1.88	20	2.00	2	52.8	.62	0.198	358
					83.8		0.355	200
4	1.88	30	2.75	4	83.8	.69	0.25	284
					161	.55	0.53	134
5	1.88	30	4.5	4	161	.70	0.308	230
					311	.46	0.54	131

Radial Leakage. As the volume of the steam increases, the area of the annulus of each ring of blades must, of course, increase proportionally. This increased area would be obtained most easily, as with impulse turbines, by increasing the blade heights in each ring. This method, however, would make it necessary to carry as stock in the store-room a great number of blades of different sizes. In order to reduce the stock of blades and to reduce the cost of machining the rotor and casing, it is customary to make a group of several rows of blades of the same height,

and the required increase in area through each ring of blades is obtained by decreasing the number of blades in each succeeding stage. The two values of volume, pitch, and number of blades given for each group in the preceding table are for the rows at the beginning and at the end of the group.

In the discussion of the design of these reaction turbines it has been assumed that each section of the rotor is made of the same diameter from the first to the last group. For theoretical considerations this assumption is permissible, but actually for each blade group the diameters of both the rotor and casing are changed so that approximately half the increase in blade height is cut out of the casing and the other half is taken from the rotor. It is usually stated that this is done merely for mechanical reasons, but this method has advantages also in order to secure the best steam flow. It is well known that steam tends to fill completely the passage through which it flows and at the same time expand at right angles to its axis of flow. Now if all the expansion is made on the casing side of the blades the expansion of the steam will increase the leakage around the tips of the blades next to the rotor without materially affecting the leakage at the tips nearest the casing.

The leakage of steam around the tips of the blades depends, of course, again upon the amount of the radial clearance. **Improvement in the design of reaction turbines** will be largely accomplished (1) by skillful designing and machine work to permit the reduction of radial clearances and (2) by increasing the blade speed. In fact the question of allowable radial clearance depends finally on the blade speed. **If the blade speed is increased it is possible to use higher steam velocities with larger pressure drop per stage, and consequently fewer stages.**

In some Parsons turbines designed for the most economical operation, thin bands are attached to the tips of the reaction blades, as shown in Fig. 56a. These are called "*end-tightened*" blades. By this arrangement of the blades it is possible to have large radial clearances. In some Parsons turbines only the high-pressure blades are "end-tightened."

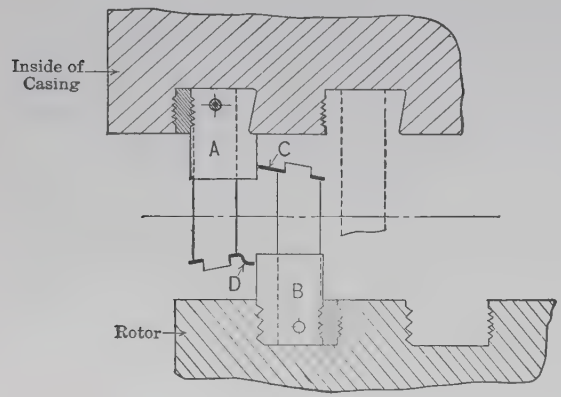

FIG. 56a. "End-Tightened" Blades.

The work done per stage is always much greater in current practice in impulse than in reaction turbines. For the same total limits of pressure the work per stage is inversely proportional to the number of stages.

In general, we may say that mechanical considerations and the speed at which machinery can be conveniently operated determine the size and number of revolutions at which a turbine can be run. In a good design about the same total efficiency is obtained, whether the turbine is classified as an impulse or a reaction machine.

NOTES ON THE DESIGN OF BLADING FOR COMBINED IMPULSE AND REACTION TURBINES.

The rotor of a modern reaction turbine of moderate size consists of an impulse wheel with two moving rows of blades (velocity stages) followed by an intermediate and a low-pressure section carrying reaction blades. The mean diameter of the blades in the intermediate section is of course appreciably smaller than in the low-pressure section. The low-pressure sections are single or double flow, depending on capacity. The peripheral velocity of the impulse wheel varies between 400 to 500 feet per

second or over, depending on the available energy utilized in the first expansion. The higher velocities are used in the smaller sizes in order to reduce the steam pressure to a value suitable for the following reaction blading. The blade velocity at the mean diameter of the Parsons blading in the intermediate section is about 350 feet per second and in the low-pressure section 500 to 600 feet per second, depending on size and revolutions per minute.

The purely reaction turbine for high-pressure steam is often preferred in America in very large sizes, 25,000 kilowatts and over, in which case the machine may be constructed in two separate casings. There are then really two distinct rotors (see Fig. 112j), the high-pressure rotor having its blading in two sections of different diameters and the low-pressure rotor, generally double flow, having its blading in one or two sections. The blade velocity in the high-pressure rotor varies between 250 to 300 feet per second and in the low-pressure rotor between 300 to 500 feet per second.

Purely reaction turbines are also ideally suitable for either **non-condensing** or low-pressure operation (see Fig. 112i). Very efficient units can be built having reaction blading only, for non-condensing operation at 3600 revolutions per minute or over and in capacities of 1000 to 2000 kilowatts or over. The available energy per stage (as explained in previous chapters) is proportional to the square of the peripheral velocity of the moving blades, and formulas for determining the available energy per stage have been given. Having settled on the blade velocities in the various sections, the number of stages is determined to utilize the complete range of available energy. The blade height in each section should of course increase gradually toward the low-pressure end.

In practice, however, the same **blade height** is maintained for a group of 4 to 6 or more stages, as it is found that the necessary increase in area to allow for steam expansion can be obtained by **gauging**; that is, by changing slightly the discharge angle of the stationary and moving blades.

The discharge angle of reaction blading is normally about 20°, except in the last row of a condensing unit the discharge angle may be 35° to 40°. The edge of the blade on the discharge side is usually extended to give a definite discharge passage between blades. The entrance angle is not far from 90°, say 70°. The **minimum blade height** is about 1 inch and is increased by steps of $\frac{1}{2}$ inch or 1 inch up to 16 inches or more. The limiting height is determined by allowable stresses which are readily determinable. The **blade width** varies from $\frac{3}{8}$ inch in the lower heights and gradually increases to $1\frac{1}{4}$ inches or $1\frac{1}{2}$ inches, depending on the height. The **pitch** of the blades is about .8 of the width. The **radial clearance** is, of course, low in order to reduce leakage; it varies between $\frac{1}{32}$ inch and $\frac{1}{16}$ inch or slightly more, depending on the height of the blades. **Axial clearances** between stationary and moving rows are quite large, sometimes half the width of blades.

FACTORS GOVERNING LEAKAGE AROUND STATIONARY AND MOVING BLADES.

As stated previously there is a pressure drop in each row of stationary and moving blades; therefore a certain amount of steam flows axially through the clearance spaces between the tips of the moving blades and casing on one side and tips of stationary blades and rotor on the other side. If **x** is the radial clearance and **D** the diameter at the tip of the blades the leakage area is equal to $\pi \mathbf{Dx}$. The weight **W** of leakage steam flowing between rows can be estimated by means of the following fundamental relation which forms the basis of all nozzle calculations,

$$\mathbf{W = AVd.}$$

$\mathbf{A} = \pi \mathbf{Dx}$ = leakage area in square feet.

d = steam density at any row in pounds per cubic foot.

V = steam velocity through the clearance space in feet per second. This velocity is, of course, a function of the pressure difference in each row of blades but it should be noted that as the available energy utilized in each stage of a group of constant diameter is approximately the same, the value of **V** will

be approximately the same for all rows in a group. With constant radial clearance and constant V the leakage flow is proportional to the steam density, which means that the leakage of steam at the high-pressure end of a group of blades of constant diameter will be greater than at the low-pressure end. Therefore the **overall efficiency of the first row of blades is lower than the rest.** It should be noted that the ratio of the radial clearance x to the blade height gives no correct measure of the ratio of leakage steam to useful steam flow. Actually this ratio is larger (about 3 or 4 times, depending on the gauging); for it is obvious that the leakage steam flows axially instead of at an angle of about 20°, as is the case for the main flow between blades. The steam velocity V through the leakage areas can be determined from the available energy utilized per row. The lower the available energy per row, the lower the velocity across the clearance space and hence the lower the leakage. **Hence the practice of reducing the diameter of the drum and using a lower peripheral velocity in the high-pressure end to suit the lower available energy utilized per row** is beneficial in reducing leakage.

This reduction in diameter has the additional effect of reducing the leakage area (πDx) and hence to further minimize the loss due to leakage.

DUMMY PISTONS AND TURBINE PACKING GLANDS.

End thrust is a matter which must receive careful consideration in the design of Parsons turbines. In **impulse** types of turbines the pressure is practically the same on both sides of each disk or wheel to which the blades are attached, so that end thrust is almost negligible. In Parsons **reaction** turbines, however, there are two considerations making end thrust a sufficiently large factor to require special provisions in designing. First, there is a cumulative pressure due to the drop in pressure through each row of blades, and second, there is an end thrust due to the steam pressure on the end of each section of the rotor where the diameter changes, as at K in **Fig. 56b**. Such end thrust is balanced to some extent, at least, in

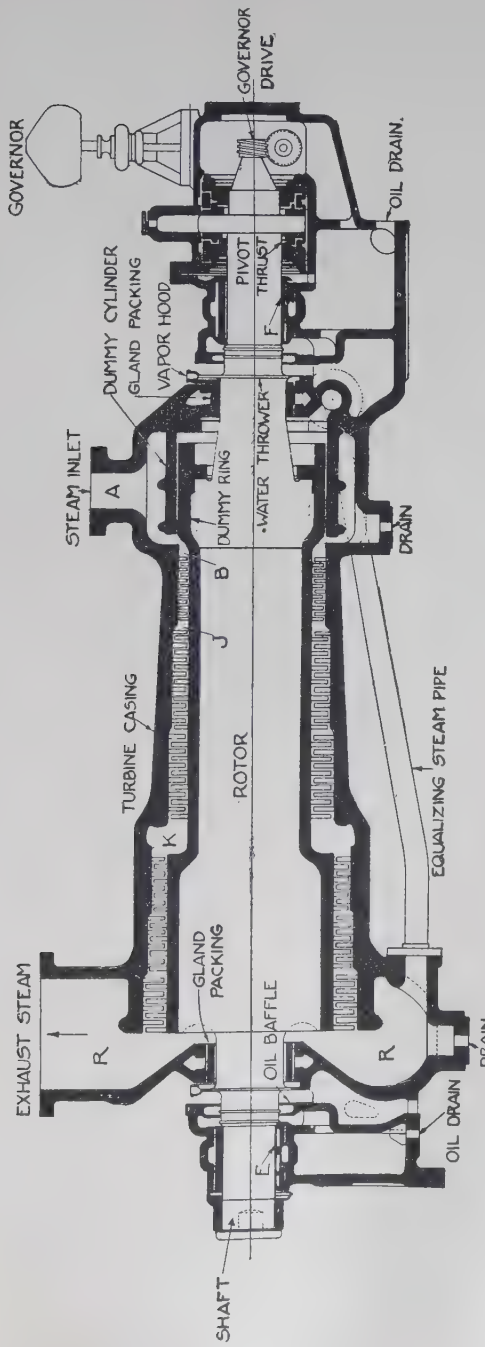

FIG. 56b. Reaction Turbine Showing Dummy Ring and Dummy Cylinder.

marine turbines having the shaft direct-connected to the propeller by the thrust of the propeller itself, which is in the opposite direction to that on the turbine shaft. End thrust may be balanced further by attaching to the turbine shaft a **dummy piston** or **" balance piston "** of sufficiently large area so that a pressure is exerted by it which is approximately equal to the end thrust. Another way to allow for end thrust is to provide a so-called thrust bearing large enough to withstand the maximum thrust that will occur.

Dummy Pistons. In modern turbines considerable end thrust is carried by the thrust bearings, which, as now designed, are capable of carrying much greater pressures than formerly, and, as a result, the diameter of the dummy piston or " balance piston " can be made correspondingly smaller. This reduction in size has the effect, also, of reducing steam leakage over the dummy piston, and of making the turbine more economical in operation.

In early designs it was customary to design the rotor with as many as three or four different diameters, and to " balance " each mean diameter of the rotor sections by a separate dummy piston or " balance piston." If, therefore, there were three sections of different mean diameters in the blading on the rotor, the turbine would have three dummy pistons, arranged in a row at the end of the turbine shaft near the steam inlet. Most modern turbines have **only one dummy piston,** as in **Fig. 56b,** which is just large enough to approximately balance all the end thrust due to the reaction blades and the steam pressure on the enlarged area of the rotor at *K*, when operating at full speed. Any inequalities of thrust at other speeds are taken by the thrust bearing.

Shaft Packing Glands. Some kind of packing device is necessary to prevent leakage of steam at both ends of a steam turbine where the shaft passes through the casing. The purpose of this shaft packing is to prevent leakage of steam at points along the shaft where the steam pressure is greater than atmospheric, and also to prevent the leakage of air into the

turbine casing where the pressure is less than atmospheric. There are three general types of devices used to prevent such leakage:

1. Labyrinth packing gland.
2. Centrifugal water gland.
3. Carbon ring packing gland.

Labyrinth Packing Gland. To prevent steam leakage from the turbine casing into the air, and air leakage into the exhaust end, several rings of labyrinth packing may be used in the gland at each end of the turbine shaft. This type of packing gland was invented by Parsons, and has been in use in steam turbines for a number of years. A very simple type of labyrinth packing shown in **Fig. 56c** has a number of alternate knife-edge collars,

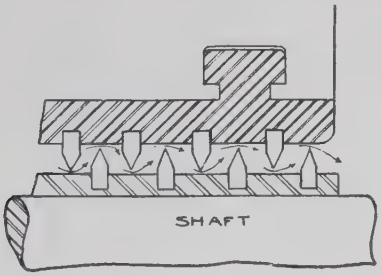

FIG. 56c. Simple Labyrinth Packing.

one set of which is fastened to the inside of the gland casing, and another set to the turbine shaft. The knife-edge collars of the labyrinth packing which are attached to the gland casing project within several thousandths of an inch of the surface of the shaft, and those attached to the shaft are set to be about the same distance away from the inside surface of the cylindrical part of the gland casing which fits around the shaft.

The action of these knife-edge collars in preventing steam leakage (toward the right, as shown by the arrows) is as follows: Steam at high pressure is on the inside of the casing. If it escapes between the first knife-edge collar and the shaft, it is wire-drawn, which means that its pressure is reduced but

its velocity is increased. As this steam passes from one knife-edge collar to the next it strikes the opposite side of the following knife-edge, which checks its velocity. Then it is wire-drawn below the next knife-edge, which further decreases its pressure and increases its volume and velocity, after which its velocity is again checked. When it reaches the last knife-edge collar of the labyrinth packing, it has practically no pressure and no velocity, and it issues to the atmosphere as a mere "feather" of steam. The actual leakage of steam from the end of a labyrinth packing gland, when properly adjusted, is indeed very small.

A **face** or **multi-collar** type of labyrinth packing is shown in **Fig. 56d.** It consists of a number of metal collars turned on the surface of a sleeve, which is usually fitted over and rigidly

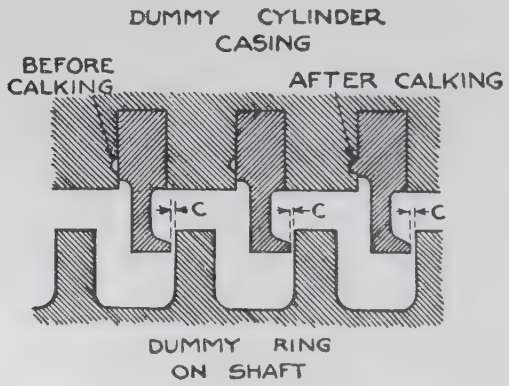

FIG. 56d. Face Type of Labyrinth Packing. (Axial Clearance.)

attached to the turbine shaft, and a corresponding number of stationary L-shaped rings or packing strips, which are calked in place in suitable lengths and are set into the cylindrical portion of the gland casing so as to be between the collars on the turbine shaft. Each of these rings is made, as shown in the figure, with an angled projection which is thinned down to obtain a narrow face surface. An adjusting device is provided outside the casing to adjust the position of the rotor in the direction

along its shaft. This adjustment makes it possible to secure and maintain a very small clearance between these thinned face surfaces of the stationary rings and the collars on the turbine shaft.

The **fin** or **radial** type of labyrinth packing which is used a great deal by the Parsons Company is shown in **Fig. 56e.** It consists of a number of rows of thin metal rings set into the

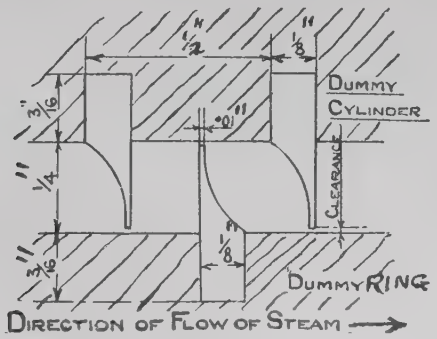

FIG. 56e. Fin Type of Labyrinth Packing. (Radial Clearance.)

surface of the dummy ring on the turbine shaft, and a corresponding number of stationary sectional rings or packing strips set into the dummy cylinder or gland casing. Each of the rings is thinned to a narrow edge, or "fin," to prevent excessive rubbing in case the tops of either set of rings should touch the dummy ring or the dummy cylinder.

Turbines of the Parsons type, indented for using low-pressure steam (usually not much above atmospheric pressure), are fitted with **fin** or **radial** labyrinth packings, as shown in **Fig. 56e.**

Another type of labyrinth packing which is sometimes used at the low-pressure end of steam turbines is shown in **Fig. 56f.** This type of packing is not nearly as efficient as the labyrinth packings already explained, but because of the large volume of the steam in the chamber at the exhaust end of the turbine, the prevention of steam leakage is much less difficult, and a

simple device can be satisfactorily used. In this simple type of labyrinth packing, illustrated in **Fig. 56f,** the collars restricting the flow of steam through the packing are closer to-

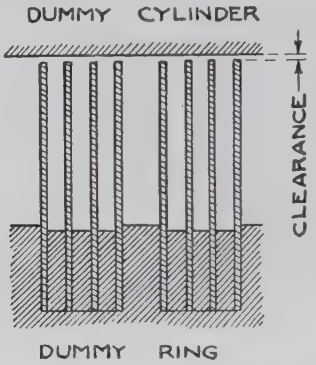

FIG. 56f. Simple Ring Type of Labyrinth Packing.

gether than in the other types of labyrinth packing, but there are no means provided in this packing to entirely prevent the leakage of steam through its narrow passages.

A combined fin and face type of labyrinth packing which has both radial (*c*) and axial (*d*) clearances is shown in **Fig. 56g.** In the simple type of labyrinth packing shown in **Fig. 56h,**

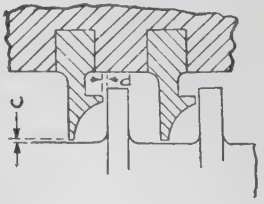

FIG. 56g. Labyrinth Packing with Both Radial and Axial Clearance.

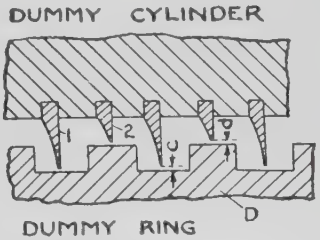

FIG. 56h. Simple Fin Type of Labyrinth Packing.

no packing strips or fins are set into the dummy ring and, therefore, none are subjected to centrifugal force.

Fig. 56i shows another type of labyrinth packing gland of the radial or fin type. To carry off the leakage of steam in

this type, pockets A and B are provided in the turbine casing. The pocket A is connected to the steam piping so that it receives steam at reduced pressure only a little above atmospheric, and this steam pressure can be controlled by valves so that it will be just sufficient to cause a leakage of a "feather" of

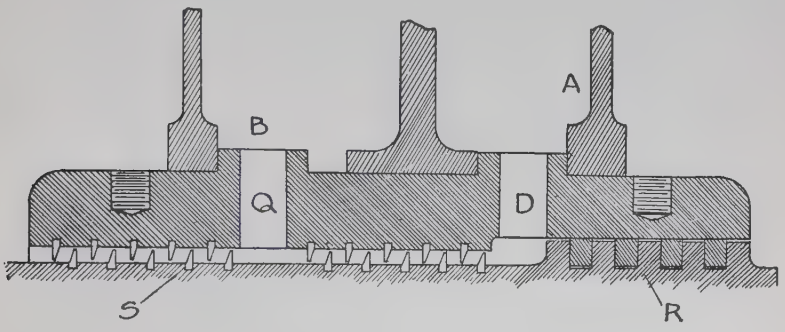

FIG. 56i. Steam Gland Combined with Labyrinth Packing and Ramsbottom Rings.

steam through the "ramsbottom" rings R, or any similar device that may be provided. In this arrangement several collars are turned on the shaft, and stationary rings are set into the gland casing, so as to fit rather loosely into the collars. Obviously a slight leakage of steam **outward** through the ring packing necessarily prevents any possible leakage of air inward into the casing. There is also a similar leakage of the steam from the pocket A through the radial packing between the pockets A and B, which is connected into some part of the turbine casing, where the pressure is slightly below atmospheric.

In some kinds of glands similar to the one shown in **Fig. 56i** there is no provision for admission of low-pressure steam, and only a leak-off pocket like the one shown in B is provided. This simplification of the gland construction is possible, however, only when the steam pressure in the gland, at the point where the gland is used, is greater than atmospheric pressure. Packings of this kind, therefore, when put on the ends of the shaft of the low-pressure turbine, should have some kind of

provision for the admission of steam slightly above atmospheric pressure into a pocket as at *A* in **Fig. 56i,** and provision for leak-off as at *B*. By this method the leakage of air into the turbine casing will be effectively prevented.

The **number of rows** of packing strips or fins on a dummy is a matter of choice with the designer; the larger the number the less the steam leakage, but the longer the shaft.

A labyrinth packing gland, consisting of the usual **dummy ring** and packing rings which are inside of the **dummy cylinder,** is indicated at the right-hand end of **Fig. 56b,** just under the steam inlet. A labyrinth packing as here applied will permit some leakage of steam, and this steam is carried to the exhaust chamber *R* through the **equalizing steam pipe** connected up below the casing to make direct communication between the right-hand and left-hand ends of the turbine. By means of this equalizing pipe, therefore, when there is a vacuum in the exhaust chamber there will also be approximately the same vacuum at the right-hand end of the rotor. The labyrinth packing gland with its dummy ring and dummy cylinder when thus placed in the casing to surround the shaft for a short distance at the right-hand end of the rotor prevents leakage of high-pressure steam through the equalizing pipe into the turbine exhaust. The efficiency of the dummy ring and dummy cylinder in preventing steam leakage depends wholly on the clearances between the moving and the stationary parts of the labyrinth packing.

Parsons turbines intended to take high-pressure steam are usually fitted with labyrinth packing rings, placed so as to be almost in contact, and a measuring device at the inlet end of the turbine by means of which the packing rings on the dummy ring and on the dummy cylinder can be actually brought into contact for the purpose of testing the accuracy of adjustment.

High-pressure Intermediate Labyrinth Gland. In the Westinghouse turbine for marine operation shown in **Fig. 56j,** a labyrinth packing gland is located in the high-pressure cylinder between the low-pressure end of the reaction blades and the impulse turbine

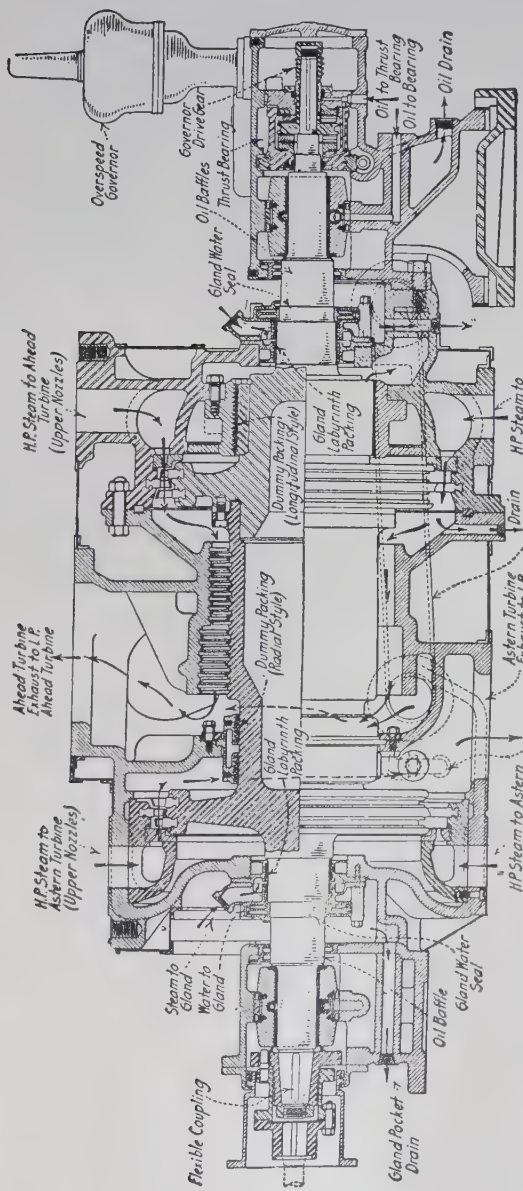

FIG. 56j. Westinghouse Marine Steam Turbine with Labyrinth Packing.

This gland prevents steam leaking into the portion of the casing in which the astern turbine is located when the turbine is running ahead, and in like manner prevents steam leaking in the other direction when the astern turbine is operating.

This labyrinth gland is held in position by a clamp ring, and is grooved to take bronze or aluminum packing rings, which are held out towards the shaft by means of flat springs. The packing rings come close to the rotor between corresponding collars on the body of the rotor. An annular space is provided around the gland from which the leakage past the first rows of packing rings passes through a steam pipe to a suitable connection on the low-pressure turbine.

Materials for Labyrinth Packings. When steam of very high temperature, especially superheated steam, is used, some manufacturers are now making the labyrinth packing glands, whether of the face or fin type, with rings made entirely of nickel steel. The usual construction is to make the rings of brass or aluminum and to place them so that the distance from the tip of one packing strip or fin to the tip of the next is about $\frac{3}{16}$ of an inch.

The dummy cylinder is frequently cast separate and bolted to the casing after machining, and the packing strips or fins when made of brass or aluminum are calked into slots in the "cylinder." The strips have a wearing shoulder against which the corresponding collar on the dummy ring is ground on first assembling, and which is afterward maintained at a distance of .010 inch to .015 inch in operation by means of the clearance adjusting device. This clearance varies somewhat with the size of the machine, and must be checked at intervals by the operator. The dummy ring on the rotor is forced in place and usually locked by a shrink ring. Clearance of .015 inch must be provided at the ends of this dummy ring to allow some freedom for endwise expansion. This will prevent bending of the rotor if there is rubbing of the parts on each other.

Centrifugal Water and Steam Glands. In some turbines a combined water and steam gland is used at each end of the turbine

shaft to prevent steam leakage from the turbine to the atmosphere, or air leakage into the turbine. **Fig. 56k** shows a type of **water and steam gland** commonly used on Westinghouse turbines to pack the shaft where it extends through the casing. The **water sealing** portion consists of a brass wheel or disk *C* which is forged on the shaft. This wheel or disk is made with a large number of small notches, or "teeth," on its circumference. The disk rotates in a narrow enclosing chamber partly filled

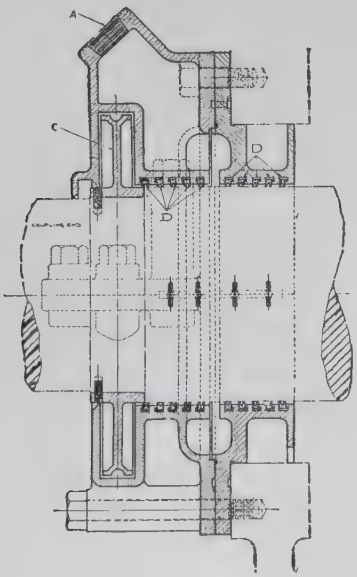

FIG. 56k. Combined Steam and Water Gland.

with water. When the disk rotates, the water is thrown off from its circumference by centrifugal force, making a water film on the inside of the water gland which effectively seals the end of the turbine from air leakage. There is also a small flange at the outer end of the hub on the wheel or disk, which acts as another water seal to prevent water escaping outwards from the gland.

The **steam sealing** portion as shown in **Fig. 56k** consists of a **labyrinth packing** which utilizes steam as a means of sealing against leakage, and is in use up to half speed, after which the

water sealing portion of the gland automatically comes into operation. The steam seal consists of two sets of aluminum packing rings *D*. Steam is supplied at *A*. Flat springs are attached at the back of these rings to hold them in place. At half speed and above, the runner of the water sealing portion of the gland will, when supplied with water, maintain a solid ring of water at its circumference, effectively sealing the turbine against leakage. A drain is provided so that any water which may leak out of the gland is collected and discharged to

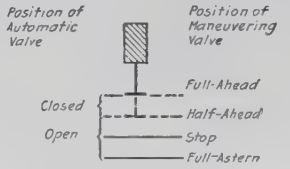

Operation of Automatic Valve

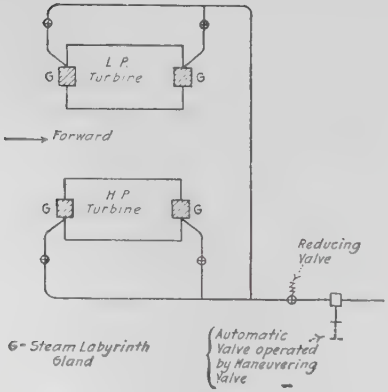

FIG. 561. Diagram of Steam Seal Piping in Westinghouse Reaction Turbine.

the feed-water tank for the boilers. The steam supplied to the glands is taken from the main steam line through a reducing valve, which regulates the pressure to about 5 pounds per square inch as read by the gage.

Water is supplied to the water gland from an elevated tank, which is kept filled with water from condensed steam pumped

into this tank before it passes to the boiler feed tank. This elevated tank is located high enough above the level of the glands to give a pressure of about 5 pounds per square inch by the gage at the glands.

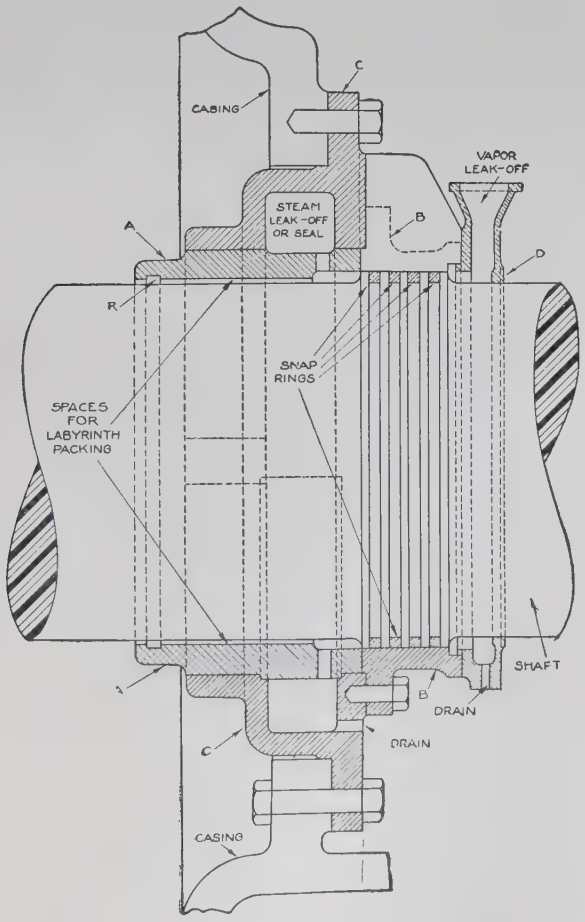

FIG. 56m. Parsons Single Pocket Type of Steam Gland.

The supply of steam or water to the glands is automatically controlled. The arrangement of steam seal piping is shown in **Fig. 561.**

Reaction steam turbines made by the Parsons company use,

as a rule, for preventing steam and air leakage at the turbine shaft, **steam sealed** glands of either the **single pocket** (**Fig. 56m**) or the **double pocket** type (**Fig. 56n**). The single pocket type is supplied with steam at reduced pressure and the steam pressure is controlled at the gland by a valve which should be adjusted so that only a " feather " of steam escapes from the vapor leak-off or hood. Steam enters the labyrinth packing through holes around the circumference like those shown around

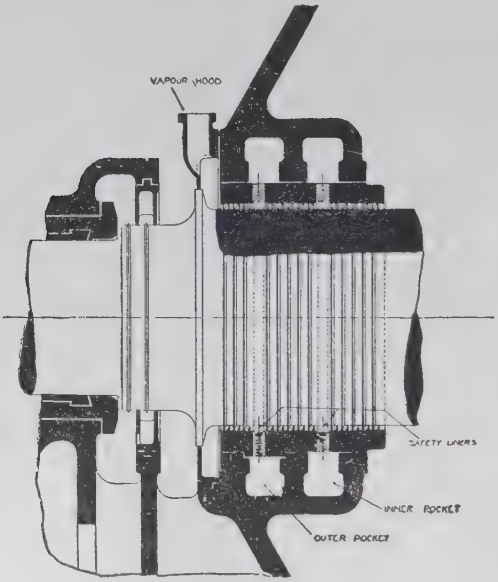

FIG. 56n. Parsons Double Pocket Type of Steam Gland.

the steam seal. The double pocket type is provided with **inner** and **outer** pockets as marked in **Fig. 56n.** Steam is admitted only to the outer pocket. The pipes for taking away the leakage steam from steam glands usually discharge into the turbine casing at a point of lower pressure than in the gland, so that this steam will do some useful work by further expansion in the blades of the turbine.

Carbon Ring Packing Gland. The type of ring packing gland most used on steam turbines consists of several carbon

rings, usually about 1 inch thick. Such rings are set up in sets so as to fit around the shaft somewhat as shown in **Fig. 560.** In this figure the carbon rings are held in the frame made to

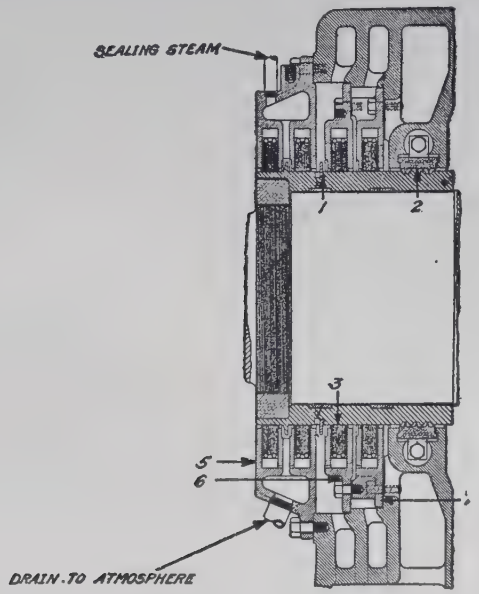

FIG. 560. Typical Carbon Packing Gland.

fit around the shaft where it passes through the end of the casing. In order to make the rings fit the shaft snugly and also to allow for slight wear, they are made in several sections or segments which are held on their bearing surface on the shaft by springs. One of the carbon rings is marked 3 in **Fig. 560.** The springs pressing the carbon rings against the shaft are shown in the figure. Radial holes, like the one marked 1 in the figure, are provided in the gland for draining off condensed steam which may have collected along the shaft. This steam is collected in a steam pocket from which it discharges into some portion of the turbine casing, where there is normally about the same pressure as in the gland casing. If these rings are to be used in portions of the turbine exposed to highly superheated steam, the carbon material must be very carefully selected, as ordinary carbon is

likely to wear away when subjected to high-temperature steam. To insure satisfactory service, the carbon segments must be carefully fitted and must be free from any grit or rust, such as might accumulate if the turbine is not operated for a considerable time. Scored spots on the highly polished bearing surface of the carbon rings must be avoided for satisfactory operation. After a new turbine fitted with carbon glands has passed its trial tests, it should be opened and its carbon rings should be examined; and if the rings are scored, they should be scraped down to a smooth surface.

A detailed drawing of the carbon ring packing gland used on the latest types of Parsons marine turbines is shown in **Fig. 56p.** The six carbon (graphite) segments in each ring are indicated.

Dummy Clearances by Micrometer Gage Adjustment. At intervals while warming up the turbine, the clearances between the packing rings of the labyrinth packing on the dummies should be observed and recorded. This is usually done by the use of an instrument, attached to the turbine casing, called a **micrometer gage,** which, as shown in **Fig. 56q,** consists essentially of a yoke frame *Y* and a sliding spindle *H*, with an attached graduated micrometer wheel *W*. This wheel has an extension on one side which is threaded and screws into a bore in the end of the yoke frame. The rim of the wheel *W* is graduated so that each division equals one thousandth of an inch.

The type of micrometer gage shown in **Fig. 56q** is supplied with a great many Parsons reaction turbines. The dummy ring of the turbine is marked *R*, the dummy cylinder *D*, and the turbine casing *C*. This yoke-shaped frame has an internal screw thread in which a threaded sleeve *E* can be moved back and forth. The spindle *H* has its shoulder *J* kept in close contact with the threaded sleeve *E* by the compression of the spring *K*. There is also a handle attached to the end of the spindle for pulling it out against the tension of the spring. The position of the spindle *H* can be adjusted with considerable accuracy by moving the graduated micrometer wheel *W*. The end of the spindle *H* toward the dummy ring is made half-round

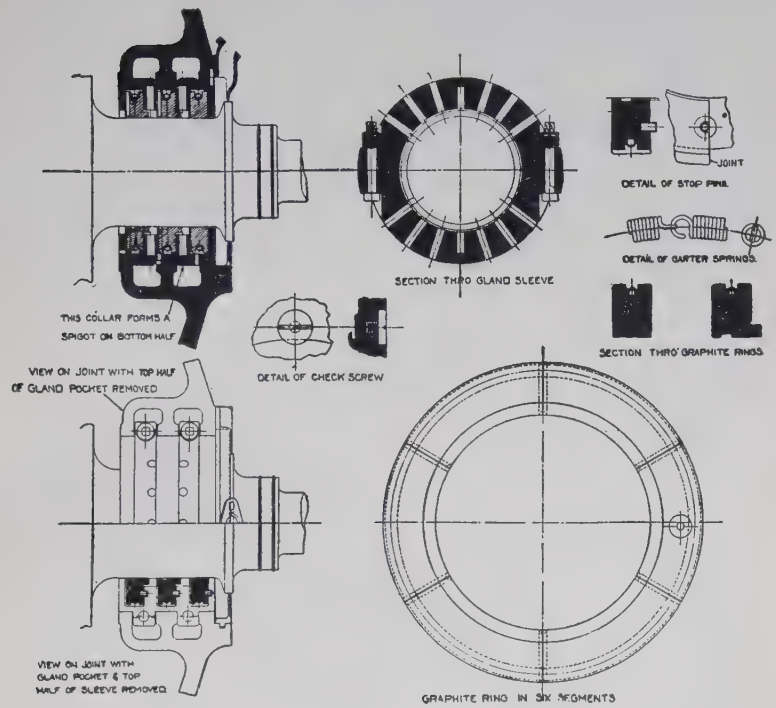
JOINT
DETAIL OF STOP PINS
DETAIL OF GARTER SPRINGS
SECTION THRO GLAND SLEEVE
SECTION THRO' GRAPHITE RINGS
THIS COLLAR FORMS A SPIGOT ON BOTTOM HALF
DETAIL OF CHECK SCREW
VIEW ON JOINT WITH TOP HALF OF GLAND POCKET REMOVED
VIEW ON JOINT WITH GLAND POCKET & TOP HALF OF SLEEVE REMOVED
GRAPHITE RING IN SIX SEGMENTS

FIG. 56p. Details of Carbon Packing Gland in Parsons Turbine

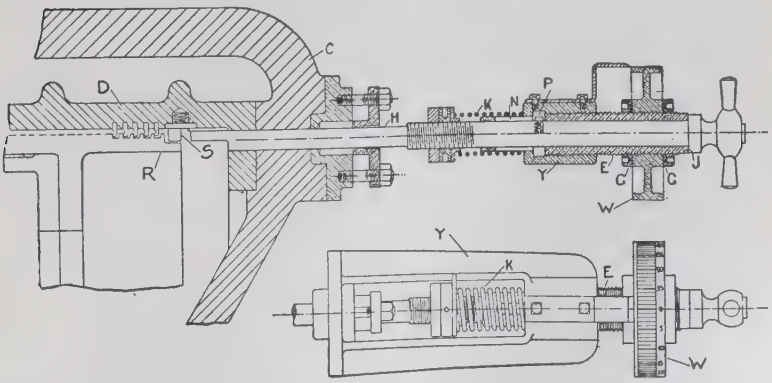

FIG. 56q. Micrometer Gage for Measuring Clearance of Labyrinth Packing on Dummy.

so that it may be in contact in one position with a fixed stop S screwed into the dummy cylinder D and in another position with the end of the dummy ring R, but never with both at the same time. The spindle H can be put in line with either the stop S or the dummy ring R by screwing it back until the peg P is in the slot N, and then sliding the peg P in one of two grooves which are diametrically opposite (180° apart). The joint around the spindle H is made steam tight by means of an ordinary stuffing-box and packing. In order to measure the dummy clearance in any position of the rotor (and also of the dummy ring), the spindle H must first be put in contact with the dummy ring and the reading on the micrometer wheel W taken. Then the micrometer wheel W should be screwed back until the threaded sleeve E is just in contact with the shoulder J. The difference of the readings of the micrometer wheel in the two positions will give the **actual dummy clearance.**

Diaphragm Packing. The sectional drawing in **Fig. 56r** shows the diaphragm packing used between each two wheels on the

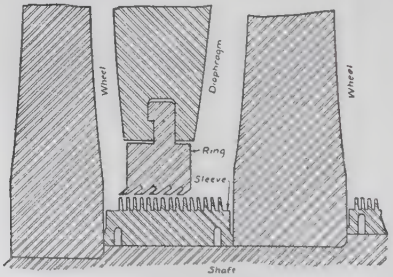

FIG. 56r. Labyrinth Type of Diaphragm Packing.

turbine rotor to impede the flow of steam along the shaft. The sleeve is keyed to the shaft, and the ring is split in halves which are held in the halves of the diaphragm by a dovetail joint.

Casing Joints for High-Pressure Steam Turbines. Because of the trend in steam turbine development toward the use of steam of unusually high pressure, it has become necessary to make special designs of the joints in the casing to prevent leaking. One manufacturer uses the method of making grooves, as

shown in **Fig. 56s,** which are inside the line of bolts which hold together the parts of the casing. It will be noticed that the passage made by the groove opens into the exhaust space of the turbine in order to reduce the difference of pressure which would otherwise exist between the outer and inner portions of the joint. By this method, any leakage of steam into the groove from the inside of the casing is carried along and discharged into the exhaust space, making the maximum difference in pressure between

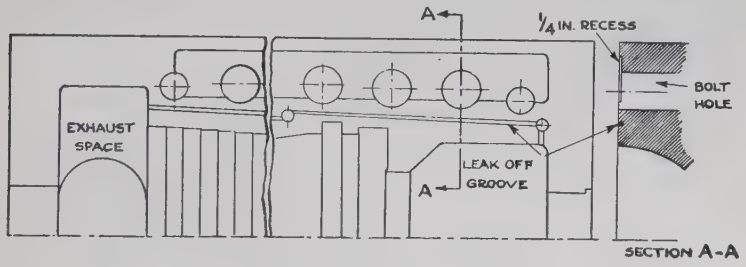

FIG. 56s. Turbine Casing Joints for High-Pressure Service.

the groove and the outside of the casing in the joint only the pressure difference between the exhaust space of the turbine and atmospheric pressure. The groove is shown lengthwise of the casing in the main portion of the figure while a drawing of the casing marked " Section A–A " is cross-sectioned through a bolt hole and shows besides the leak-off groove, a $\frac{1}{4}$-inch recess which is made all the way around the casing in order to make possible an accurate and tight fitting of the joint.

End Thrust on Rotor of Reaction Turbine. In a group of reaction blades having the same height throughout, and hence the same mean diameter of the rotor, the statical axial force on any row of blades in the direction of flow is the difference between the entrance and exit pressures multiplied by the annular area between the rotor and the casing. The total thrust in the whole group of blades is the sum of these forces. The whole drop of pressure between entrance to and exit from the group is distributed between the rows of fixed and moving blades, and it may be assumed that the force on the moving blades is half

the total amount. If P_1 and P_0 are respectively the pressures in pounds per square inch at the entrance and exit of each group of blades, and a is the annular area between drum and casing in square inches, then the positive statical blade thrust T_p is $\frac{a}{2}(P_1 - P_0)$.

The axial velocity at any row of blades is the steam volume divided by the annular area. This quantity, divided by $g(32.2)$, gives the force per pound of steam flowing. The sum of these forces gives the total force distributed over the whole group, and half of it over the moving blades.

Now if W is the steam flowing in pounds per second, v_1 is the steam volume at entrance and v_0 at exit from the group of blades, the negative dynamic thrust is $T_d = \frac{W}{2g}\left(\frac{v_0 - v_1}{a}\right)$. The total net thrust* on the group of blades is $T = \frac{a}{2}(P_1 - P_0) - \frac{W}{2g}\left(\frac{v_0 - v_1}{a}\right)$.

FORMULA FOR LEAKAGE THROUGH DUMMY RINGS ON BALANCE PISTONS.†

A = leakage area in square inches = πdx.
d = diameter packing ring in inches.
x = clearance between rings in inches.
P_1 = initial, P_2 final pressure in pounds per square inch absolute.
n = number of rings or labyrinths.
W = leakage in pounds per second.
V_1 = initial specific volume in cubic feet per pound.

$$W = .473\, A\left(\frac{P_1^2 - P_2^2}{nP_1V_1}\right)^{\frac{1}{2}}. \qquad (29)$$

* Dynamical thrust is usually less than 1 per cent., and does not exceed 2 per cent. of the total, so that for practical purposes it may be neglected.

† See *Die Dampfturbinen* by Stodola, page 319, 5th edition.

Number of Rows of Reaction Blades. Consider a 9,000 horsepower, 2400 revolution per minute, condensing turbine of the combined impulse and reaction type. The first expansion from an initial steam pressure of 165 pounds per square inch absolute to 60 pounds per square inch absolute takes place in an impulse wheel having two rows of moving blades of a mean diameter of 43 inches or blade speed of 450 feet per second. The reaction blading proper consists of an intermediate section single flow and a low-pressure section double flow (see Fig. 107). The available energy between 60 pounds per square inch absolute and one pound per square inch is about equally divided between the intermediate and the low-pressure sections. The blading is designed as follows:

Intermediate (Single Flow).			Low-Pressure Drum (Double Flow).		
Mean Diam., Inches.	No. of Rows.	Blade Height, Inches.	Mean Diam., Inches.	No. of Rows.	Blade Height, Inches.
31	7	3	43*	2	3
32½	5	4½	44½	2	4½
35	4	7	47	2	7
			49	2	9

* Observe that this value is $\sqrt{2}$ times the diameter of the first row in the preceding (intermediate) section. See page 115.

The blade width varies from ½ inch for the 3-inch blades to 1 inch for the 9-inch blades. We have therefore 25 pressure stages including the first impulse stage.

Consider as a second illustration a 1500 kilowatt, 3600 revolution per minute, non-condensing reaction turbine to operate between 160 pounds per square inch absolute initial pressure and 30 pounds per square inch final pressure. Steam flow is approximately 16 pounds per second. Available energy is 126 B.T.U. per pound of steam. Consider two sections of reaction blading, one high pressure at a blade speed of 250 feet per second (16 inches mean diameter) and another section at a blade speed of about 375 feet per second (24 inches mean diameter).

With 20° discharge angles of blades, 70° entrance angles, and

.92 **velocity coefficient*** or .845 **energy loss† coefficient** we have by reference to the formulas on page 94 (lines 8 and 9),

$$V_{r3} = \frac{V_b \sin 70^\circ}{\sin 50^\circ} = 250 \times \frac{.94}{.766} = 307 \text{ feet per second.}$$

$$V_{r2} = \frac{V_b \sin 20^\circ}{\sin 50^\circ} = 250 \times \frac{.342}{.766} = 111 \text{ feet per second.}$$

Available energy **E per stage** for the high-pressure group with a blade speed of 250 feet per second is (by formula on page 97)

$$\mathbf{E} = (307^2 - 111^2) \div (.845 \times 778 \times 32.16) = 3.9 \text{ B.T.U. per pound.}$$

The available energy per stage in any other stage will be proportional to the square of the blade velocity selected. The number of stages or rows will be chosen to utilize the full range of available energy as follows:

No. of Rows.	Mean Diameter, Inches.	B.T.U. per Stage.	B.T.U. per Group.	Specific Volume, Cu. Ft. per Lb.
10	16	3.9	3.9 × 10 = 39	2.8– 4.3
8	17	4.4	4.4 × 8 = 35	4.3– 6.4
2	24	8.8	8.8 × 2 = 17.6	6.4– 8.1
2	24.5	9.15	9.15 × 2 = 18.3	8.1– 9.7
2	25	9.5	9.5 × 2 = 19	9.7–12.6
			Total.....128.9	

In choosing these numbers of rows of blades the method is as follows: From the specific volume, as found in the steam tables, the annular area for each group is determined. This area determines the mean diameter of the group. The B.T.U. per stage may then be found, since it is proportional to the square of the mean diameter. Finally the number of rows in each group is determined so that the B.T.U. for each group is about $\frac{6}{2}\frac{3}{2}$ in the high-pressure section and $\frac{6}{3}\frac{3}{3}$ for the low-pressure section. Of course experience is the only sure guide in choosing dimensions of this kind.

* A usual assumption for the first approximation. After the steam velocities have been determined, a second "corrected" calculation can be made with values of coefficients from curve "B" in Fig. 51.

† Velocity is proportional to the square root of the available energy. In this case $(.92)^2 = .845$. Observe that sin 70° = sin 110°, in reference to the formulas on page 94.

Leakage through Labyrinth Packing. Assuming a radial clearance of .02 inch and 30 labyrinths or rings on a 16 inch diameter, and using the formula previously given, leakage is found to be .65 pound per second. Hence $16 - .65 = 15.35$, which is the actual flow of steam in pounds per second through the turbine proper and available for doing work.

Steam Leakage Around Tips of Stationary and Moving Blades. Assuming a radial clearance of .04 inch and the energy division as above we obtain for the first five rows a leakage flow of $\frac{2.1 \times 307}{144 \times 3.06} = 1.45$; say 1.5 pounds per second; where $\frac{2.1}{144}$ is the **leakage area** in square feet, 307 is the steam velocity in the leakage space, and 3.06 is the average specific volume in cubic feet per pound in the first stages.

Computing the other leakages in a similar manner we obtain the following tabulation:

No. of Stages, per Group.	Radial Leakage, Lb. per Sec.	Effective Steam Flow, Lb. per Sec.	Output in B.T.U. per Lb.	B.T.U. Output per Sec.
5	1.5	13.85*	$19.5 \times .845 = 16.5$	228
5	1.2	14.2	$19.5 \times .845 = 16.5$	234
4	1	14.35	$17.6 \times .845 = 14.8$	212
4	0.9	14.45	$17.6 \times .845 = 14.8$	214
2	1.3	14.05	$17.6 \times .845 = 14.8$	208
2	1.15	14.25	$18.3 \times .845 = 15.6$	222
2	1	14.35	$19 \times .845 = 16$	230
				Total 1548

$$\text{Total output in kilowatts} = \frac{1548 \times 3600}{3412} = 1635.\dagger$$

Or allowing 35 kilowatts for bearing friction loss and other unaccounted for losses, we obtain a net shaft output of 1500 kilowatts and a steam economy of 36 pounds per shaft kilowatt hour thus,

$$\frac{16 \times 3600}{1600} = 36 \text{ pounds}$$

* $15.35 - 1.5 = 13.85$ pounds.

† Observe that this result is in kilowatts, and not horsepower as in the preceding illustrative example.

This is equivalent to an efficiency of 73 per cent. This example shows a very favorable application for the reaction turbine in so far that it indicates how a sufficient number of rows can be adopted to utilize the available energy efficiently, and yet maintain low leakage losses by using a large number of stages of comparatively small diameter.

Reaction Blading for a Turbine of 7500 Kilowatts' Capacity. Steam conditions are 180 pounds per square inch absolute, 150° F. superheat and 28 inches vacuum. The type is double flow for intermediate and low-pressure blading, and has an impulse wheel (34 inches diameter) with two rows of blades for the high-pressure end. First expansion in impulse wheel to 67 pounds per square inch absolute, 90 B.T.U. available. Second expansion in intermediate drum to 10.5 pounds per square inch absolute, 137 B.T.U. available. Steam flow is at rate of 25 pounds per second from nozzles. Third expansion in low-pressure drum to 1 pound per square inch absolute, 141 B.T.U. available. Allowance was made for reheating between the expansions.

For reaction blading allow a velocity coefficient of .92 or energy coefficient .845 in the intermediate section and a velocity coefficient of .90 or energy coefficient .81 in the low-pressure section, since steam velocities are higher.

For 20° exit angle the following relations hold as shown in previous chapters: Ratio of actual steam exit velocity to peripheral velocity = 1.23; ratio of entrance relative velocity to peripheral velocity = .445; available energy to be utilized per pressure stage.

$$E = \frac{1.31\ V_b^2}{f \times 25{,}000}.$$

f = friction energy coefficient which is .845 for intermediate and .81 for low-pressure section.

V_b = blade speed in feet per second.

INTERMEDIATE BLADING (DOUBLE FLOW).

Mean Diam., Inches.	No. of Rows.	V_b, Ft. per Sec.	Available Energy, B.T.U.	Specific Volume, Cu. Ft. per Lb.	Blade Height, Inches.
21	7	330	$6.8 \times 7 = 48$	7 –11.4	$2\frac{1}{2}$
22	6	346	$7.5 \times 6 = 45$	11.4–21.8	$3\frac{1}{2}$
24	5	375	$8.75 \times 5 = 44$	21.8–34	$5\frac{1}{2}$

This table is constructed in the same manner as in the previous example. Total available energy for intermediate blading, 137 B.T.U. per pound. Useful energy per pound of steam $= 137 \times .845 = 115.5$ B.T.U.

LOW-PRESSURE BLADING (DOUBLE FLOW).

Mean Diam., Inches.	No. of Rows.	V_b, Ft. per Sec.	Available Energy, B.T.U.	Specific Vol., Cu. Ft. per Lb.	Blade Height, Inches.
34.5	2	540	$2 \times 19 = 38$	34.8– 57	$4\frac{1}{2}$
37	2	580	$2 \times 22 = 44$	57–110	7
39	1	610	$1 \times 24.5 = 28$	110–170	9
40	1	628	$1 \times 31.5 = 31.5$	170–300	10

Total available energy is 141 B.T.U. and useful B.T.U. per pound of steam is $141 \times .81 = 134$. In the last two rows higher available energies per stage are allowed than according to formula on account of appreciably higher velocities at the tips of the blades as compared with the blade velocities at the mean diameter.

IMPULSE ELEMENT.

The impulse wheel (34 inches diameter) has a blade speed of 530 feet per second, and the available energy is 90 B.T.U. per pound of steam. Nozzle velocity coefficient is .96, and bucket velocity coefficient is .85. The useful B.T.U. output per pound of steam can be obtained from velocity diagram as follows:

V_0	2120 ft. per sec.	90 B.T.U.		
V_1	2040 "	83	36.5 B.T.U.	
V_2	1540 "	47.5		
V_3	1310 "	34.2	20	"
V_4	845 "	14.2		
V_5	715 "	10.2	6	"
V_6	465 "	4.3		
V_7	400 "	3.2	1.7	"
V_8	276 "	1.5		
			63.2	"

Useful B.T.U. per pound of steam = 63.2.

Leakage is calculated below, assuming radial clearance of .035 inch for intermediate reaction blading and .05 to .06 inch for low-pressure blading.

First group intermediate $\frac{400 \times .035 \times 23\frac{1}{2}}{144 \times 9}$* = .8 lb. per sec.

Last group intermediate $\frac{460 \times .035 \times 23\frac{1}{2}}{144 \times 16.5} = .4$ lb. per sec.

First group L.P. $\frac{700 \times .05 \times 44}{144 \times 70} = .48$ lb. per sec.

Last group L.P. $\frac{775 \times .06 \times 50}{144 \times 240} = .21$ lb. per sec.

We can assume a leakage of .5 pound per second at each end for the intermediate blading, and .3 pound per second at each end for the low-pressure blading. For a steam flow through the nozzles of 25 pounds per second (90,000 pounds per hour), we have the following as the useful output from the blades,

From impulse wheel,

$$\frac{25 \times 63.2 \times 3600}{2545} = 2230 \text{ horsepower.}$$

From intermediate blades,

$$\frac{24 \times 115.5 \times 3600}{2545} = 3920 \text{ horsepower.}$$

* Average specific volume, cubic feet per pound.

From low-pressure blades,

$$\frac{24.3 \times 114 \times 3600}{2545} = 3920 \text{ horsepower.}$$

Total 10,070 horsepower.

Allowing seventy horsepower for rotation loss of impulse wheel and for bearing losses we have a net output of 10,000 horsepower. Hence the steam economy is 90,000 ÷ 10,000 or 9 pounds per horsepower per hour which is equivalent to an efficiency of 78 per cent.

The blade heights were determined from the knowledge of steam flow, steam velocity and steam density in each group. It is customary, in order to reduce the number of standard heights of blade, to maintain a constant height of blade in each group and obtain the necessary increase in area for steam expansion by "gauging," that is by increasing the normal distance between blades. It is of course necessary to compute and specify the exit area for each row of stationary and moving blades. From the energy division given above the steam velocity and specific volume at the exit of each row is known, hence the exit areas follow from the simple relation,

$$W = \frac{aV}{144v},$$

where

W = steam flow in pounds per second.
a = exit area in any row in square inches.
v = specific volume in cubic feet per pound of steam.
V = actual steam velocity in feet per second in the blades.

On account of the comparatively high blade velocities in the last rows in the low-pressure drum, it will be necessary to hold these by the dovetail or "T-head" construction (page 149) usually adopted for impulse blading. This will be necessary in order to reduce stresses to allowable values. It will also be necessary to use nickel steel or some other steel alloy suitable for stresses of about 30,000 pounds per square inch at 20 per cent. above rated speed.

Chart for Solution of Velocity Triangles. In the design of a turbine many changes are always made affecting the velocity diagrams, and turbine manufacturers have come to use special charts with polar-rectangular coördinates for the rapid construction of these diagrams. Such charts requiring only the use of straight-edge, dividers and pencil, are made with rectangular coördinates extending to the right and left and downward from the point O, and have radiating lines at every $2\frac{1}{2}$ degrees from O. Such a chart on a very small scale is shown in **Fig. 56t,** which illustrates its application in constructing the velocity diagrams for a single wheel impulse turbine to operate with steam at 100 pounds per square inch absolute pressure and 2 per cent. moisture, which expands through nozzles to 4 pounds per square inch absolute. The nozzle angle α is 20 degrees and the blade velocity V_b is 1000 feet per second. Exit and entrance angles (β and γ) are to be equal.

The entropy-total heat chart shows that the total heat drop for these conditions is 217 B.t.u. per pound of steam, and the velocity $\mathbf{V}_2$ of the steam leaving the nozzle is found by the usual methods to be 3300 feet per second. This velocity is laid off from O at an angle of 20 degrees as shown, to a suitable scale. To find the relative velocity $\mathbf{V}_{r2}$ of the steam entering the moving blade, it is necessary to draw from the end of $\mathbf{V}_2$ a horizontal line to represent the blade speed V_b of 1000 feet per second. The entrance angle β is found by extending the diagonal line for $\mathbf{V}_{r2}$ down to the semi-circular angle scale. The angle β is about 28.2 degrees.

The left-hand triangle in the figure is the second part of the velocity diagram. Since the entrance and exit angles are equal, the angle γ is made equal to angle β. For brevity it is assumed that there is no velocity loss in the blades and $\mathbf{V}_{r3} = \mathbf{V}_{r2}$. To obtain the absolute exit velocity $\mathbf{V}_3$ of the steam, it is necessary to lay off $\mathbf{V}_{r3}$ and $\mathbf{V}_b$ to scale as in the right-hand triangle and the absolute exit velocity of the steam is 1570 feet per second. The same chart may be used for making a large number of velocity diagrams, either by ink of different colors or by making the diagrams so that they may be easily erased.

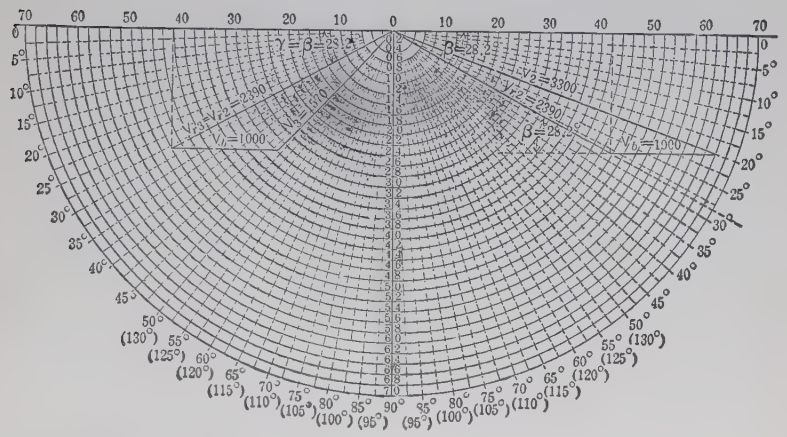

FIG. 56t. Chart for Velocity Triangles.

GENERAL COMPARISON OF COMMERCIAL IMPULSE AND REACTION TURBINES.

IMPULSE.

1. Few stages.
2. Expansion in nozzles.
3. Large drop in pressure in a stage.
4. Initial steam velocities are in general high (1000 to 4000 feet per second).
5. Blade velocities 400 to 1200 feet per second.
6. Best efficiency when blade velocity is nearly half the initial velocity of the steam. For a single wheel per pressure stage.

REACTION.

1. Many stages.
2. No nozzles.
3. Small drop in pressure in a stage.
4. All steam velocities are low (300 to 600 feet per second).
5. Blade velocities 150 to 400 feet per second.
6. Best efficiency when the blade velocity is nearly equal to the highest velocity of the steam.

Radial Blade Clearances. In impulse turbines the radial clearance (between the blade ring and the inside of the casing) is not important. It is one of the first principles of a good design of an impulse turbine that the blades shall be made long enough to allow the steam to be discharged through them freely without "choking" the flow and "spilling" steam over the outer edges of the blades. Since the pressure is the same on the

two sides of the blades, **radial blade clearances in impulse turbines can be made of generous dimensions.** (See **Figs. 57** and **119,** in which Curtis designs are shown.)

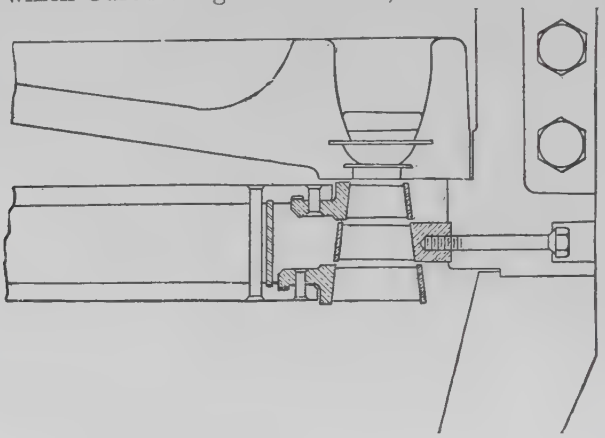

Fig. 57. Illustrates Radial and Axial Clearances in an Impulse Turbine.

In reaction turbines, on the other hand, it is very necessary to make radial clearances as small as is mechanically possible, because in these turbines the steam expands in the moving as well as in the stationary blades and there is a drop in pressure between the two sides of every row of blades. On account of this pressure drop there is a continuous flow of steam around the edges of the blades, which is large or small in amount in proportion to the size of the radial clearances. The clearance between the stationary blades fixed to the casing and the surface of the rotor is of course just as important as that between the moving blades and the casing. An American manufacturer of the Parsons reaction turbines states that the radial clearances are from .02 to .10 inch, varying with the diameter of the drum. These limits are given for drums between 1 foot and 10 feet in diameter. Radial clearances of large sizes of Parsons turbines made by Brown-Boveri & Co. are from 2 to 3 millimeters (.08 to .12 inch). Attainment of minimum safe radial clearances is the goal for every designer of reaction turbines.

Axial Blade Clearances. Axial clearances with respect to impulse and reaction turbines present conditions just opposite

from those for radial clearances. In reaction turbines, axial clearance is not an important factor in the design. Until recently, however, it was considered very important in the design of impulse turbines to make the axial clearance between the moving blades, and nozzles or stationary blades, as small as possible; and indeed, unfortunately, some impulse turbines in the early days were built with very small axial clearances, so that the least vibration of the shaft would cause striking of the moving blades against the nozzles. It has been shown, however, by actual experience as well as by experiment that axial clearances can be made as large as .20 inch without appreciable loss; or, in other words, practically as large as in reaction turbines — usually about .10 to .20 inch.

The difficulties of the designers of the first commercial impulse turbines can well be imagined when it was considered so essential to make the axial clearances not more than .02 or .03 inch. In the case of one small turbine built with three stages the axial expansion of the shaft in the length included between the high-pressure nozzle mouths and the blades of the third stage was .10 inch by actual measurement. To allow for a shifting of the blades of .10 inch with only .03 inch axial clearance in a turbine with **velocity stages** was not an easy problem.

Axial clearances in Curtis impulse turbines are .06 to .15 inch for 500-kilowatt sizes, and in larger machines are sometimes as much as .25 inch. In Rateau impulse turbines these clearances are from .12 to .25 inch.*

Materials for Blades and Erosion. Ordinary rolled steel is a very suitable metal for turbine blades when used for dry or superheated steam at either high or low velocities if the turbine is kept in practically continuous operation. Wet steam, however, will wear away steel blades very rapidly by erosion, and when a turbine fitted with steel blades is idle for days at a time the blades will corrode, so that when it is started again the particles

* In impulse turbines with nozzles discharging radially into blades or buckets on the rim like the Sturtevant, Terry, or Riedler-Stumpf types, it is stated that there is no appreciable change in velocity loss when the radial clearance (between the nozzle and the buckets) is increased from .10 to .40 inch.

of iron oxide (rust) will be carried away by the steam to act like a sand blast on the blades in succeeding stages. Steel is an exceptionally good material for blades under favorable conditions because it can be rolled cheaply into bars of any shape of section,* and it is unequaled for strength. Copper alloys, known in the trades as **"extruded metal,"** are made into bars of any shape of section by "drawing" as wire is manufactured. Blades of this material are not strong enough for the highest velocities used in some modern types.

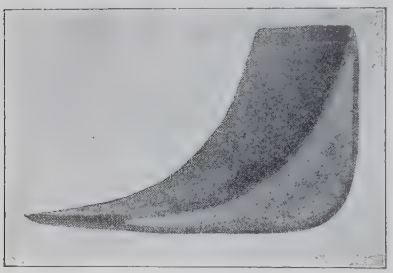

Fig. 58. Etched Section of a Blade made of Monnot Metal (Steel and Copper).

No metal has all the physical properties desirable in a blading material. A compound metal known as Monnot or "duplex" metal has been developed but has found little use, which is a disappointment. It consists of a steel core covered with a thin copper sheathing chemically

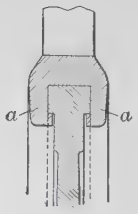

Fig. 59.

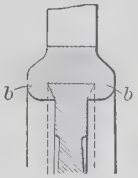

Fig. 60.

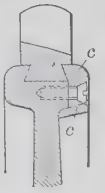

Fig. 61.

Designs of Steam Turbine Blades.

welded to the steel in such a perfect manner that the blades may be drawn cold from the original ingot into the required finished section without in any way affecting the bond between the copper and the steel. **Fig. 58** shows an etched section of a blade of this material from a Westinghouse turbine.

* Rolled bars are cut up into lengths corresponding to the height of the blade plus an additional length for dovetailing into the rim of the turbine wheel. When this dovetailing method is used (**Fig. 63**) the blades are separated from each other by "spacing pieces" of suitable shape to fit between the blades.

Blades like those, for example, in **Figs. 59–61,** which are too irregular to be rolled or drawn are usually drop-forged, or if very irregular and for low velocities they may be cast of bronze or copper alloys. Forked blades (**Fig. 59**) are commonly cast with the forks far enough apart so that they will pass over the enlarged section of the rim and are forced together when they are in place. Another method is to cut away the enlarged part of the rim section for a short length, and blades drop-forged or cast with the forks in their normal position can be inserted at this place and can then be pushed around on the rim till all the blades are in place. The parts of the rim cut away must be replaced to secure the blades at that section.

The blades of small sizes of Curtis turbines are sometimes cut in the rim of a solid disk by automatic machinery. De Laval

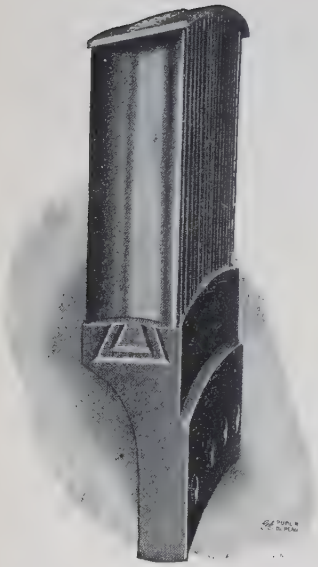

Fig. 63. Dovetailed Type of Blade (Curtis).

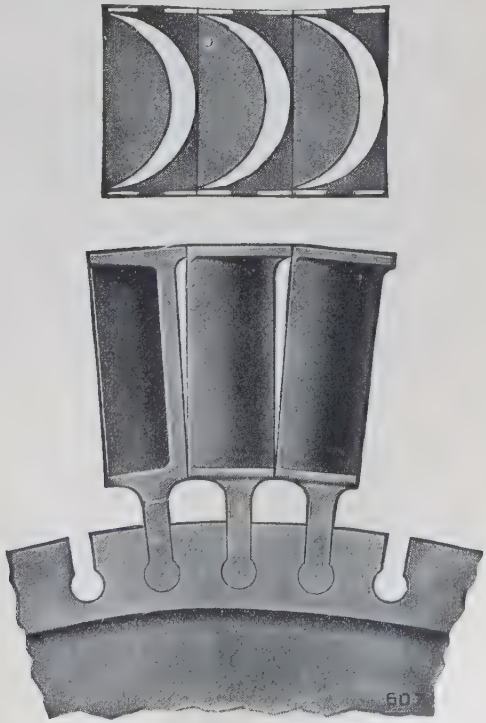

Fig. 64. Typical De Laval Blades.

blades are made of an alloy of steel containing nickel and copper. The metal is drop-forged into the peculiar shape required for insertion into the blade disk. (See **Fig. 64.**) These blades have a smooth, hard, glossy coating of natural oxide which is said to have excellent properties of resisting the action of water, superheated steam, and corrosive acids. On the other hand, when "mild" nickel steel blades are used there is much trouble from rust, and "high" nickel steel blades are too brittle.

It is stated that the usual alloy used in England for blades of Parsons turbines is 63 Cu + 37 Zn; but any zinc alloy is quite unsuitable for superheated steam or for high velocities.

Fig. 65* shows the effect of the **erosion** due to steam on blades

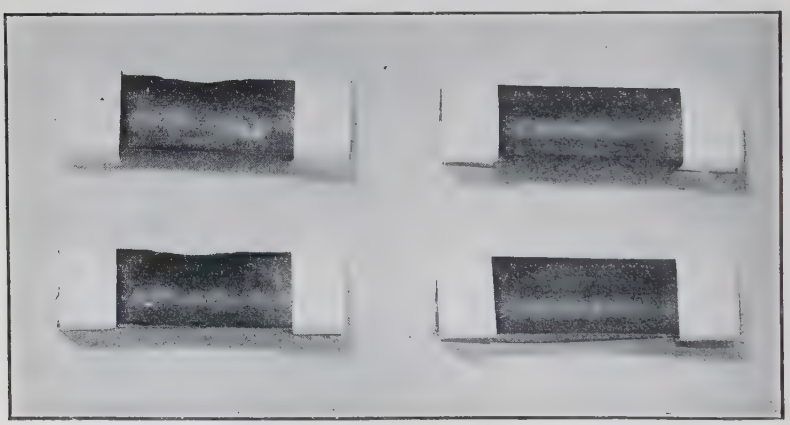

FIG. 65. Photograph of Turbine Blades Showing Erosion.

made of Delta metal about 60 Cu + 37 Zn + 3 Fe. These blades were held stationary in a steam jet for 128 hours. The blades on the left side of the figure were subjected to steam at 2900 feet per second; and those on the right to steam at 600 feet per second. Low-velocity steam eroded the blades so little that the tool marks put in the blades when they were made are still visible.

* The author is indebted to Mr. Francis Hodgkinson for this photograph.

CHAPTER V.

MECHANICAL LOSSES IN TURBINES.

In the designs of turbines on the preceding pages the nozzle and blade efficiency was first calculated, and then the total, or "over-all," shaft efficiency was obtained by subtracting other losses as follows:

(1) Disk and blade friction, or windage, due to rotation in a fluid medium (steam).

(2) Leakage of the steam chiefly through the clearance between the shaft and the diaphragms (" stage leakage ") of a multi-stage impulse turbine and through the radial blade clearances in a reaction turbine.

(3) Bearing and stuffing-box friction losses

(4) Radiation.

Of these, the first three are, in a way, mechanical losses in the sense that the details of mechanical design largely determine their values.

The first of these losses, disk and blade rotation loss, is by far the most important and will be discussed first.

Losses Due to Friction of Turbine Wheel Revolving in Steam. Losses due to revolving disks or wheels in steam are very difficult to determine with accuracy. Tests to determine these losses are usually made with the wheel rotating in stagnant steam, and it is practically impossible to have, under these conditions, steam of the same quality or superheat in all parts of the casing. A number of formulas have been proposed for the friction losses of disks and blades in dry saturated steam, but there is no good agreement of the results of different experimenters. In fact no great accuracy can be expected because there is no doubt that the exponents of logarithmic friction

curves plotted from such tests vary considerably with the details of design, and besides, it is very difficult to get good tests.*

An important reason why the tests from different designs of turbines do not agree better is that clearances between moving and stationary parts have an appreciable effect. If the clearances all around the wheel are very small the wheel and blade friction loss will be somewhat less than for a wheel revolving in large clearance spaces. This effect is most marked at low speeds. When higher speeds are reached there is more tendency for the wheel to "cut through" the surrounding steam without increasing the "disturbance" in proportion to the increase in speed.

The author has from time to time investigated large numbers of tests to determine the friction losses of wheels and blades of turbines in steam and air, and this experience has shown that the following formulas will give fair average results for forward running in practically **stagnant** steam. The rotation loss or skin friction of a **plain disk** † revolving in **dry saturated** steam is expressed by the following formula in **horsepower:**

$$\mathbf{F_w = .08\ d^2 \left(\frac{u}{100}\right)^{2.8} \gamma,} \qquad \textbf{(30a)}$$

where **d** is the diameter of disk to inner edge of blade in **feet.**

u is the peripheral velocity of disk in feet per second.‡

γ is the density of surrounding medium in pounds per cubic foot (reciprocal of the specific volume).

A similar term to determine the rotation loss of one row of **blades** $\mathbf{F_b}$ (without the disk), in **horsepower,** is

$$\mathbf{F_b = .3\ dl^{1.5} \left(\frac{u}{100}\right)^{2.8} \gamma,} \qquad \textbf{(30b)}$$

* The peculiar circumstance that water in the liquid state can exist, almost indefinitely, in the presence of superheated steam, leading some to propose a *vergasungswärme*, is one of the greatest difficulties.

† Similar to those in Curtis and Rateau turbines. On account of the thick hubs of De Laval disks (Figs. 83 and 84), about 15 per cent. should be added to the results given by equation (30a) to allow for the larger surface of these disks.

‡ It is often stated that the disk and blade friction losses vary as the third power of the speed. But this value cannot be stated with any claim to great accuracy. Experimenters do not all agree on this value, and values from 2.5 to 3.5 are given by different authorities. The author, from the result of the experiments he has

where l = length of blades **in inches** excluding the band (if there is one), and d, u, and γ are used as before.

For a simple turbine wheel with only one row of blades we can write for the total rotation loss F_t in **horsepower:**

$$F_t = (.08\,d + .3\,l^{1.5}) \left\{ \frac{u}{100} \right\}^{2.8} d\gamma. \qquad (30c)$$

The density of superheated steam varies with the amount of superheat, so that by adding the following notation,

γ_d = density of dry saturated steam at the pressure of the surrounding medium in pounds per cubic foot,

D = superheat in degrees F.,

v_d = specific volume of dry saturated steam at the pressure in the surrounding medium in pounds per cubic foot,

and using the following equation for specific volume v_s of superheated steam given on page 40,

$$v_s = (1 + .00065\,D)^2\, v_d,$$

we have the following formulas, taking the place of (30a), (30b), and (30c) above, for **superheated steam:**

$$F_w = .08\,d^2 \frac{\left(\frac{u}{100}\right)^{2.8} \gamma_d}{(1 + .00065\,D)^2}. \qquad (30d)$$

$$F_b = .3\,dl^{1.5} \frac{\left(\frac{u}{100}\right)^{2.8} \gamma_d}{(1 + .00065\,D)^2}. \qquad (30e)$$

$$F_t = (.08\,d + .3\,l^{1.5}) \frac{\left(\frac{u}{100}\right)^{2.8} d\gamma_d}{(1 + .00065\,D)_2}. \qquad 30f)$$

investigated, considers the 2.8 power a good average value suitable for practically all conditions. In the value of the exponent this rotation loss resembles train and ship resistance. The windage loss of dynamos properly designed for high speeds is a curve of the *second* power. When the windage loss curve of a dynamo shows an exponent of 3 or 3.5 it must be inferred that the machine was not properly designed for high speeds. It may be interesting to the practical men reading this book to know how the exponent is obtained from a test. This is done most conveniently by plotting on any suitable coördinate paper the *logarithms* of the loss for the ordinates, and the *logarithms* of the speed for the abscissas. The tangent of the curve is the value of the exponent if the scales of ordinates and of abscissas are the same.

Or the curve given in **Fig. 68** can be used to correct equations **(30a)**, **(30b)**, and **(30c)** by means of a coefficient.

While the effect of superheating is to reduce these losses, moisture, on the other hand, increases them very appreciably.

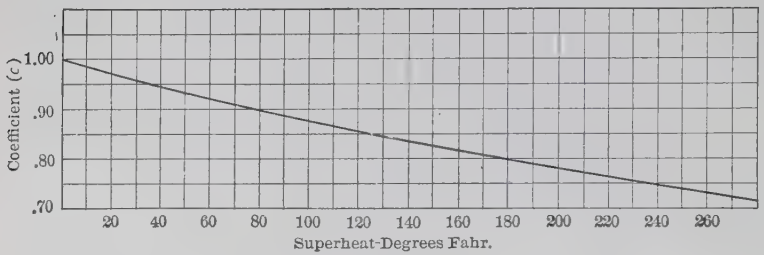

FIG. 68. Curve to Correct Rotation Losses for Superheat.

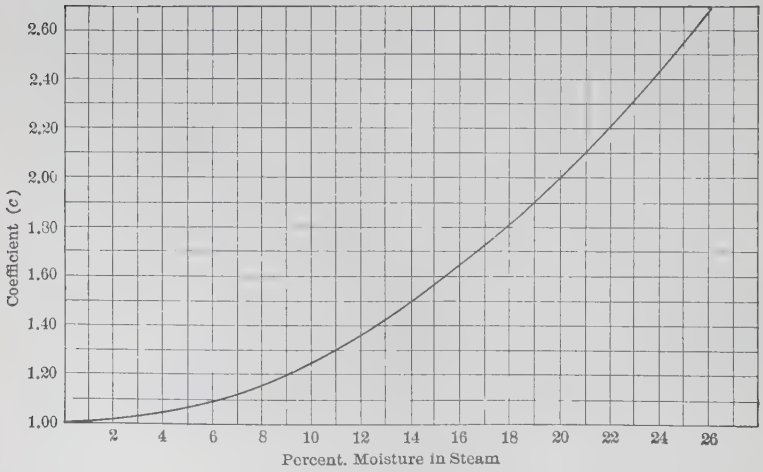

FIG. 69. Curve to Correct Rotation Losses for Moisture.

Fig. 69 shows a curve giving the coefficients to be applied to the losses calculated by the above formulas for dry saturated steam to correct for moisture.

Example. (*a*) Calculate the frictional rotation loss of a disk 3 feet in diameter of a non-condensing single stage turbine (steam

pressure 15 pounds per square inch absolute) when the steam is (1) dry saturated, (2) superheated 100° F., (3) 10 per cent wet. The speed is 3600 revolutions per minute. (*b*) Determine also the rotation loss of a single row of blades 1 inch long on this disk. *Ans.* (*a*) 3.50; 3.06; 4.38. (*b*) 4.37; 3.82; 5.47.

At high peripheral speeds the rotation loss of a non-condensing turbine with the wheels revolving in steam at atmospheric pressure is quite large, as the example above illustrates. This loss decreases, however, very rapidly with increasing vacuum, and is, in fact, nearly proportional to the pressure. This fact is not, however, always appreciated by designers. Of course, when disk and blade rotation losses are being calculated for a series of pressures for the several stages of a turbine, as is usually done before deciding on the nozzle proportions, it is only necessary, if the wheel dimensions are constant, to calculate for one pressure and determine the values for the other stages by multiplying by a constant representing the ratio of the densities. Of all the variables in equations (30a), (30b), and (30c), the density is the only term varying as the first power. For most work it will be allowable to assume, within a small range, the density proportional to the pressure; that is, if the disk and blade loss has been calculated in steam at some given pressure, the corresponding friction loss at any other pressure may be found by the ratio of the pressures.

The disk and blade rotation losses of a Parsons or other drum type may be calculated with the above formulas by calculating the loss for each group of blades of the same length and diameter and adding to the sum of the blade losses the rotation loss due to disks approximately equivalent to the outside surface of the drum. As the friction loss due to the drum itself is small compared with that of the many rows of blades, no great accuracy need be attempted in this calculation.

In small sizes of steam turbine-generators the rotation loss is a considerable percentage of the total output. The disk and blade loss of a single stage turbine with a single row of blades, rated by the manufacturer at about 250 kilowatts at 3600 r.p.m., is shown

in **Fig. 70.** The curves show that the rotation or windage loss of the generator alone is about 30 kilowatts and the total rotation loss is 50 kilowatts or 20 per cent. of the rated output. Similarly

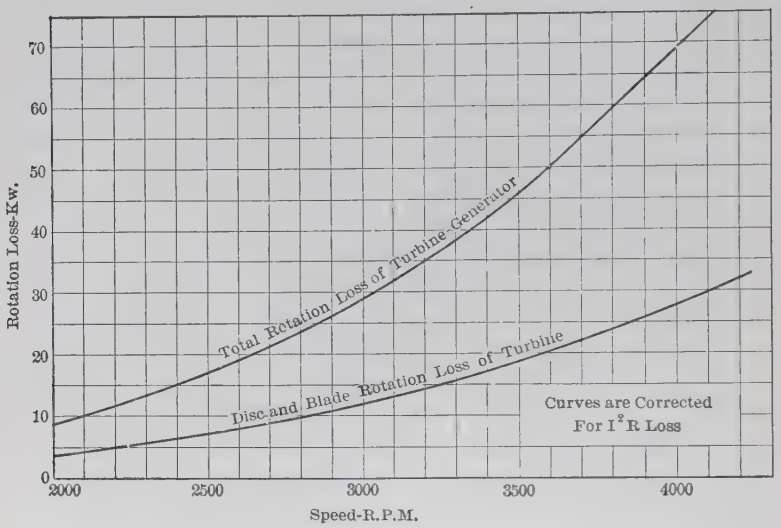

FIG. 70. Rotation Loss Curves of 250-Kilowatt Turbine-Generator.

the total rotation loss of a 2000 to 3000 kilowatt turbine-generator is from 10 to 15 per cent. of the rated output.

Method of Making Tests to Determine Disk and Blade Rotation Losses of a Steam Turbine. The simplest method for making such a test, and the one commonly employed, is to attach an electric motor to the turbine shaft (sometimes in a direct-connected set the generator is used as a motor) and run it at a number of different speeds. In taking a series of speeds, no observations are made until conditions have become "steady," and the speed must be held **constant** for several minutes so that a number of readings can be taken on the electrical instruments measuring the input of the motor. The results give the rotation loss of the wheel and blades in steam as well as bearing friction and the rotation or "windage" and electrical losses of the motor. Then the turbine wheel is removed, leaving the packing

at the generator end of the turbine on the shaft, and the motor is run alone. The power now measured is that required to overcome the rotation and electrical losses of the generator and the bearing friction. Curves of power and speed as variables (Fig. 70) are plotted for each set of observations, and the disk and blade loss is determined by subtracting the ordinates of one curve from those of the other. It may be assumed with sufficient certainty that the weight of the turbine wheel itself would not alter the bearing losses to any considerable extent.*

The important fact that all results given here are for **disks and blades revolving in a stagnant medium** must not be overlooked, and it must not be assumed that the results will be the same under actual operating conditions. It may be a coincidence that the losses are the same in both cases. Under operating conditions, the spaces between the wheel blades are filled with steam flowing from the nozzle over the blades and then to the condenser. Now it has been shown by a series of experiments by Lasche† of the Allgemeine Electricität Gesellschaft (Berlin) that increasing the number of nozzles around the turbine wheel reduces the disk and blade rotation losses. These losses in the blades are very largely due to the fan action of the blades which start currents of steam just as a centrifugal fan does. In other words, this is what Stodola calls "ventilation." With steam flowing through the blades, this fan action is largely prevented and the losses are consequently reduced. Another reason why the disk and blade rotation losses should be less when the turbine is operating than they are in stagnant steam, is that they are really friction losses, or a conversion of kinetic energy into heat, with the effect of either superheating or drying the steam. In a turbine with more than one stage a part of the heat energy gained as the result of the friction is converted in the next expansion into kinetic energy or velocity. It is usually assumed that about 15 per cent.

* It may be interesting to observe that since disk and blade friction is proportional to the density of the medium, the friction is therefore greater in air than in dry saturated steam at atmospheric pressure.

† Stodola, *Die Dampfturbinen*, 5th edition, page 130.

of the disk and blade losses are regained by the reheating, and that therefore the actual friction losses in an operating turbine are about this amount smaller than in stagnant steam. In cases of full admission true blade friction disappears; and a proportionate reduction will also take place, according to the degree of admission, when it is partial.

Investigation of wheel and blade friction losses by the author, using a modification of the method first suggested by Lasche of Berlin, did not show the reduction in these losses to be expected when determined under operating conditions. These results, however, cannot be considered conclusive, as the type of machine used was not well suited for the purpose, and only 25 per cent. of the blades were filled with steam. It has been stated that when a large quantity of steam passes into the casing through a suitable opening without passing through nozzles and escapes through the exhaust (without increasing the pressure), the disk and blade rotation losses are increased as much as 20 per cent. This apparently is an influence to counteract the effect of filling the blades.

In all the analysis that has preceded there are so many uncertain variables entering that it is impossible to get agreement, although, apparently, we have a large amount of data from which to draw. It may be stated, however, that all in all, the best data on disk and blade friction seem to show that it is smaller and of less significance than the results of most investigators would show.

A little space should be given to Lasche's very interesting method.* A turbine-generator set was used in which the **number of nozzles discharging into the turbine could be regulated** and the **output** of the generator was observed for each setting of valves, and tests with varying loads were made at a number of different speeds. The turbine wheel was then removed from the shaft, and by running the generator as a motor the friction losses in the stuffing-box at the generator end of the turbine and in the bearings, as well as the windage loss of the generator, were determined.

* Stodola, *Die Dampfturbinen*, 5th edition, page 131.

The resistance of the armature and brushes was also measured to calculate the **heating (I^2r) loss.** The sum of these losses was calculated for a number of loads (kilowatts) and curves similar to those in Fig. 70 were obtained. Curve *A* in **Fig. 71** shows the elec-

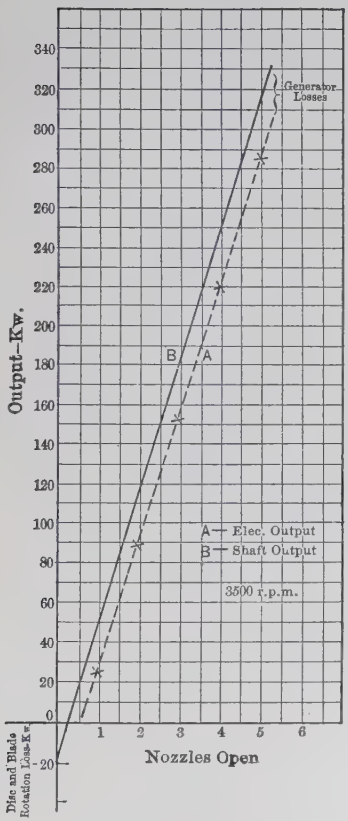

FIG. 71.

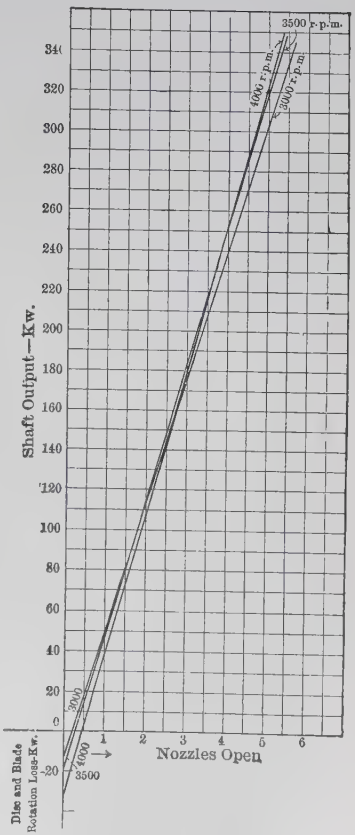

FIG. 72.

Curves for Determining Disk and Blade Rotation Losses at Operating Conditions.

trical output at 3500 r.p.m. Curve *B* in the same figure, representing the power delivered to the shaft by the turbine, was obtained by adding to the generator output for each set of nozzles open (curve *A*) the corresponding generator losses (windage, heating, and bearing friction). The lower portions of curves *A* and *B*

are practically straight lines, and by producing curve *B* to the horizontal axis, its intersection represents on the scale of abscissas the **disk and blade rotation losses of the turbine** at the speed of the test and **under actual operating conditions.**

By making a series of such tests at different speeds curves of rotation losses can be made. **Fig. 72** shows typical curves of shaft output for speeds of 3000, 3500, and 4000 r.p.m. Although this method requires very careful experimenting, the same must be said of any other method of obtaining these losses, and most of the results that have been published are very poor. At least it must be admitted that by this method a number of *uncertain* factors to be considered in the "stagnant steam" method are eliminated.

The lines in **Fig. 72** are really the same as **"Willans lines"** and **might just as well be plotted for total "flow" of steam per hour as for nozzles open.** In fact in turbines where there are no nozzles the "flow" of steam must be used. It is obvious that any load curve of brake horsepower giving the total steam consumption can be used to determine the rotation loss by producing the "flow" line to the axis on which the output is scaled. A good check on the results of such rotation loss tests is secured by observing whether the lines for the speeds near the rated speed cross each other at about the rated output. In a good design the speed-output curve will be like the curve in Fig. 80, giving nearly the same output at speeds considerably above or below the rating.

The no load steam consumptions of 2000, 5000 and 9000 kilowatt **Curtis turbine-generators** are respectively about 14, 12.5, and 8 per cent. of that at full load. In other words these percentages are only from one to two per cent. greater than the sum of the disk and blade rotation and generator windage losses. Generator windage loss is probably about equal to the sum of all the turbine losses. It is generally assumed that the no load steam consumption of a Parsons turbine (without the generator) is about 12 per cent. of that at the **normal maximum output.**

At no load the steam required for very large reciprocating engines and generators is probably in no case less than 15 per cent. of that used at full load.

Leakage Loss. The other important mechanical loss in a steam turbine is that due to the leakage of steam through the passages of the turbine without doing work. In impulse turbines of more than one stage this loss is chiefly caused by the leakage of steam between the shaft and the diaphragms. In a great many turbines no satisfactory packing is provided at these places and the loss is sometimes more than 10 per cent. of the total amount of steam supplied to the turbine. In reaction turbines the loss is due to leakage through the radial clearance passages and is large or small in proportion to the size of these clearances. The loss is usually assumed to be about 5 per cent. in good Parsons turbines.

Future improvements in the economy of all types of steam turbines will depend largely on the success of designers in reducing these leakage losses. For impulse turbines an improved design has been patented by Wilkinson (page 284). In reaction turbines it can be reduced by making a shorter and stiffer shaft.

Bearing Friction. This loss is due to the friction of the shaft in its bearings, and in a De Laval turbine the friction of the gears is usually included. An analysis of the losses in a De Laval turbine is given on page 218, where the bearing friction loss is given as one per cent. Bearing friction is also discussed in the footnote on page 110.

* Kruesi, *Proc. Am. Street and Interurban Railway Engineering Association*, 1907.

CHAPTER VI.

METHOD FOR CORRECTING STEAM TURBINE TESTS.

Standard Conditions for Steam Turbine Tests. If tests of steam turbines could always be made at some **standard vacuum, superheat, and admission pressure,** then turbines of the same size and of the same type could be readily compared, and an engineer could determine without any calculations which of two turbines was more economical for at least these standard conditions. But steam turbines and engines even of the same make are not often designed for and operated at any standard conditions, so that a direct comparison of steam consumptions has usually no significance.

It will be shown now how good comparisons of different tests can be made by a little calculation involving the reducing of the results obtained for varying conditions to **assumed standard conditions.** The method given here is that generally used by manufacturers for comparing different tests on the same turbine (a "checking" process) or on different types to determine the relative performance. To illustrate the method by an application, a comparatively simple test will first be discussed.

Practical Example. Corrections for Full Load Tests. The curve in **Fig. 73** shows the steam consumption for varying loads obtained from tests of a 125-kilowatt **steam turbine** operating at 27.5 inches vacuum, 50° F. superheat, and 175 pounds per square inch absolute admission pressure (at the nozzles). It is desired to find the equivalent steam consumption at 28 inches vacuum, 0° F. superheat, and 165 pounds per square inch absolute admission pressure for comparison with "guarantee tests" (**Fig. 74**) of a **steam engine** of about the same capacity operating at the latter conditions of vacuum, superheat, and pressure. The manufacturers of the steam

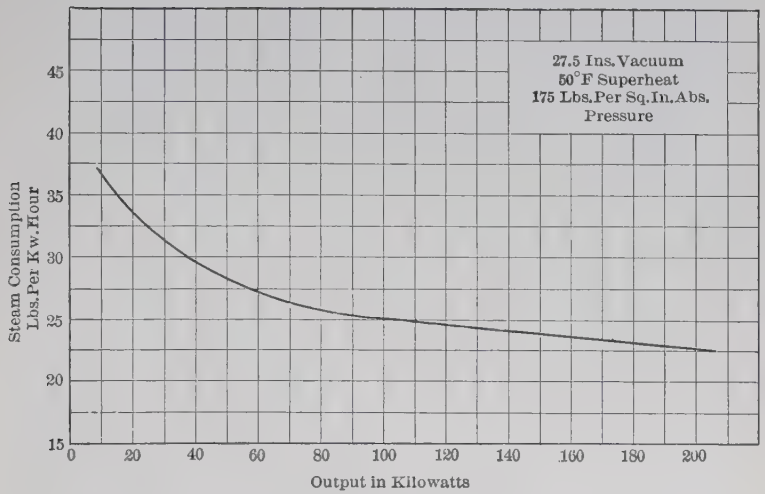

FIG. 73. Load Curve of a Typical 125-Kilowatt Steam Turbine.

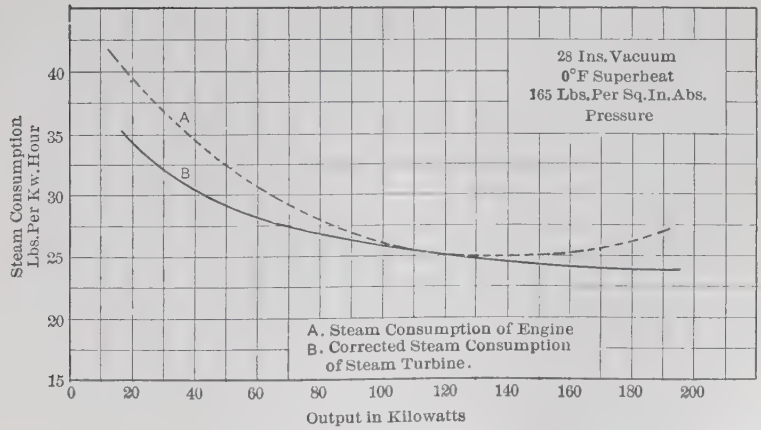

FIG. 74. Comparative Load Curves of a Reciprocating Steam Engine and a Steam Turbine — Both of 125 Kilowatts Capacity at Full Load

turbine have provided the curves in **Figs. 75, 76,** and **77** showing the change of economy with varying vacuum, superheat, and pressure. With the help of these **correction curves,** the steam consumption of the turbine can be reduced to the conditions of the engine tests. **Fig. 75** shows that between 27 and 28 inches vacuum a difference of one inch changes the steam consumption 1.0 pound. **Fig. 76** shows a change of 2.0 pounds per 100° F. superheat, and from **Fig. 77** we observe a change of 5.0 pounds in the steam consumption for 100 pounds difference in admission pressure. Compared with the engine tests the steam turbine was operated at .5 inch lower vacuum, 50° F. higher superheat, and 10 pounds higher pressure. At the conditions of the engine tests, then, the steam consumption of the steam turbine should be reduced .5 pound to give the equivalent at 28 inches vacuum, but is increased 1.0 pound to correspond to 0° F. superheat, and .5 pound more to bring it to 165 pounds absolute admission pressure. The full load steam consumption for the steam turbine at the conditions required for the comparison is, therefore, 24.5 − .5 + 1.0 + .5, or 25.5 pounds.*

Persons who are not very familiar with the method of making these corrections will be liable to make mistakes by not knowing whether a correction is to be added or subtracted. A little thinking before writing down the result should, however, prevent such errors. When the performance at a given vacuum is to be **corrected to a condition of higher vacuum the correction must be subtracted** because obviously the steam consumption is reduced by operating at a higher vacuum. When the steam consumption with superheated steam is to be determined in its equivalent of dry saturated steam (0° superheat) the correction must be added because with lower superheat there is less heat energy in the steam and consequently there is a larger consumption. Usual

* The *corrected* steam consumption is found to be nearly the same as that which the three correction curves show for the same conditions, that is, about 25.0 pounds. If there had been a difference of more than about 5 per cent. between the corrected steam consumption and that of the correction curves for the same conditions, the "ratio" method as explained on page 190 for fractional loads should have been used also for full load.

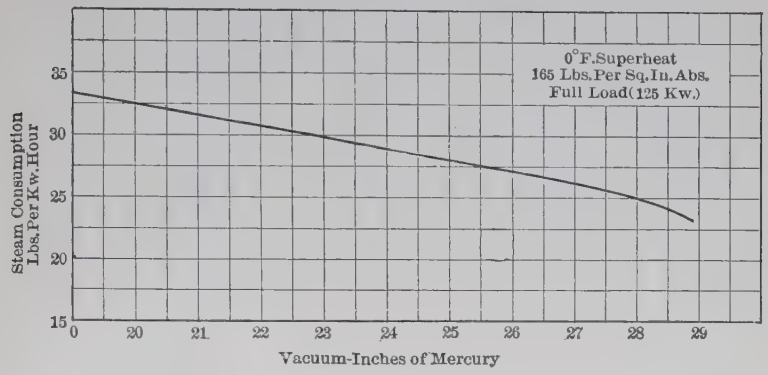

FIG. 75. Vacuum Correction Curve for a 125-Kilowatt Steam Turbine.

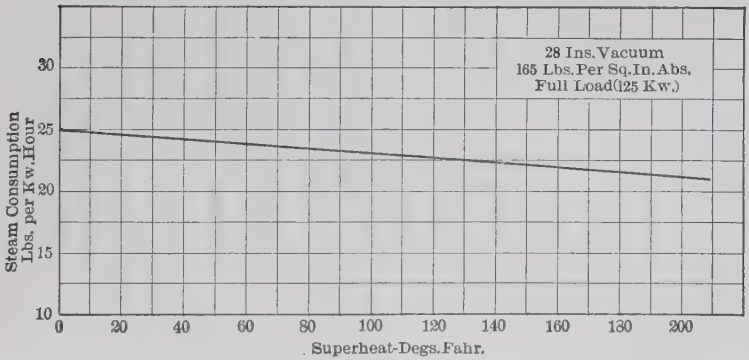

FIG. 76. Superheat Correction Curve of a 125-Kilowatt Steam Turbine.

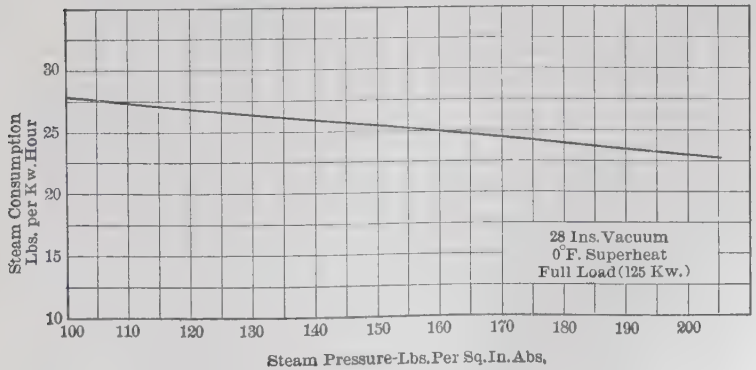

FIG. 77. Pressure Correction Curve of a 125-Kilowatt Steam Turbine.

corrections for differences in admission pressure are not large; but it is well established that the economy is improved by increasing the pressure.

Corrections for Fractional Loads. It is the general experience of steam turbine manufacturers that full load correction curves, if used by the following "ratio" or percentage method, can be used for correcting **fractional** or **over loads.** This statement applies at least without appreciable error from half to one and a half load, and is the only practicable method for quarter load as well.* Stated in a few words, it is assumed then that the steam consumption at fractional loads is changed by the same *percentage,* as at full load, for an inch of vacuum, a degree of superheat, or a pound of pressure. It will now be shown how this method applies to the correction of the steam consumption of the turbine at fractional loads. Now according to the curve in Fig. 75 the steam consumption at 27.5 inches (25.6 pounds) must obviously be multiplied by the ratio $\frac{25.0}{25.6}$,† of which the numerator is the steam consumption at 28 inches and the denominator at 27.5 inches, to get the equivalent consumption at 28 inches vacuum. This reasoning establishes the proper method for making corrections; that is, that the **base for the percentage** (denominator of the fraction) must be the steam consumption at the condition to which the correction is to be applied.‡ Similarly the correction ratio to change the consumption at 50° F. superheat to 0° F. is $\frac{25.0}{24.0}$, and to correct 175 pounds pressure to 165

* A very exhaustive investigation of this has been made by T. Stevens and H. M. Hobart which is reported in *Engineering,* March 2, 1906.

† Assuming that this short length of the curve may be taken for a straight line without appreciable error.

‡ In nearly all books touching this subject so important to the practical, consulting, or sales engineer, the alternative method of taking the steam consumption at the required conditions as the base for the percentage calculations is implied. By such a method percentage correction curves derived from straight lines like Figs. 76 and 77 would be straight lines and, in application, give absurd results. Actually such percentage corrections will fall on curves (see pages 216 and 217).

pounds the ratio is $\frac{24.8}{24.3}$. Data and calculated results obtained by this method may then be tabulated as follows:

	Conditions of Test.	Required Conditions.	Correction Ratio.	Percentage Correction.
Vacuum, inches	27.5	28	$\frac{25.0}{25.6}$	-2.34%*
Superheat, degrees F.	50.	0	$\frac{25.0}{24.0}$	$+4.17\%$
Admission pressure, pounds absolute	175.	165	$\frac{24.8}{24.3}$	$+2.06\%$
Net correction				$+3.89\%$

* Steps in the calculation are omitted in the table, thus $\frac{25.0}{25.6} = .9766$ or 97.66 per cent., making the correction 100 − 97.66, or 2.34 per cent. It may seem unreasonable to the reader that these percentages are calculated to three figures when the third figure of the values of steam consumption is doubtful. In practice, however, the ruling of the curve sheets must be much finer and to larger scale so that the curves can be read more accurately.

The signs + and − are used in the percentage column to indicate whether the correction will increase or decrease the steam consumption. "Net correction" is the algebraic sum of the quantities in the last column.

The following table gives the results of applying the above "net correction" to fractional loads.

	$\frac{1}{4}$ Load (31.3 kw.)	$\frac{1}{2}$ Load (62.5 kw.)	$\frac{3}{4}$ Load (93.8 kw.)	$\frac{4}{4}$ Load (125 kw.)	$\frac{5}{4}$ Load (156.3 kw.)
Steam consumption from test (Fig. 73), lbs.	31.2	26.9	25.2	24.5	23.6
Net correction +3.89%	+1.2	+1.1	+1.0	+1.0	+ .9
Corrected steam consumption	32.4	28.0	26.2	25.5	24.5

Curve *B* in Fig. 74 shows the corrected curve of steam consumption for the steam turbine as plotted from the above table. By thus combining, on the same curve sheet, curves *A* and *B* as in this figure, the points of better economy of the turbine are readily understood.

Results of economy tests of the various turbines given on the preceding pages are of very little value for comparison when the steam consumptions or "water rates" are given for all sorts of conditions. With the assistance, however, of curves like those shown in Figs. 75, 76, and 77, if they are representative of the type and size of turbine tested, it is possible to make valuable comparisons between two or more different turbines. Some very recent data of Curtis and Westinghouse-Parsons turbines are given below, together with suitable corrections adopted by the manufacturers for similar machines.

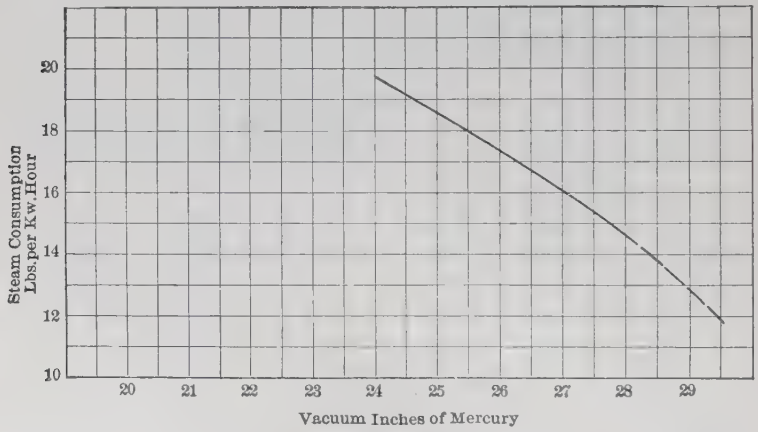

FIG. 78. Typical Vacuum Correction Curve of a 5000-Kilowatt Impulse Turbine.

The following test of a Westinghouse-Parsons turbine, rated at 7500 kilowatts, was taken at Waterside Station No. 2 of the New York Edison Co., and a comparison is made with a test of a five-stage 9000-kilowatt Curtis turbine at the Fisk Street Station of the Commonwealth Electric Company of Chicago. As no pressure correction is given for the Curtis machine, the New York Edison test is corrected to the pressure at which the other machine was operated (179 pounds per square inch gauge). Approximately an average vacuum for the two tests is taken for the standard, and 100° F. superheat is used for comparing the superheats. These assumed standard conditions make the

corrections for each turbine comparatively small. When two tests are to be compared, by far the more intelligent results are obtained if each is corrected to the average conditions of the two tests, rather than correcting one test to the conditions of the other. There is always a chance for various errors when large corrections must be made.

7500-KILOWATT WESTINGHOUSE-PARSONS TURBINE, WATERSIDE STATION NO. 2, NEW YORK EDISON COMPANY.

		Corrected to	Correction, Per Cent.*
Duration of test, hours	8	.....	.....
Speed, revolutions per minute	750	.....	.....
Average steam pressure, pounds gauge	177.5	179	−0.15
Average vacuum, inches (referred to 30 in. barom.)	27.3	28.5	−3.36
Average superheat, degrees F	95.7	100	−0.30
Average load on generator, kilowatts	9830.5	.....	.....
Steam consumption, pounds per kilowatt-hour	15.15†	.....	.....
Net correction, per cent	.....	.....	−3.81
Corrected steam consumption, pounds per kilowatt-hour	.....	14.57	.....

* The following corrections were given by the manufacturers and accepted by the purchaser as representative of this type and size of turbine:

Pressure correction 0.1 per cent. for 1 pound.

Vacuum correction 2.8 per cent. for 1 inch.

Superheat correction 7.0 per cent. for 100 degrees F.

The percentage correction for pressure in this test becomes then 0.1 (179.0 − 177.5) or 0.15 per cent. Similarly for vacuum, correction is 2.8 (28.5 − 27.3) or 3.36 per cent.; and also for superheat, correction is 7.0 (100 − 97.5) ÷ 100 or 0.30 per cent. These values are tabulated in the last column of the table.

† This is 7½ per cent. better than the manufacturer's guarantee.

9000-KILOWATT CURTIS TURBINE, FISK STREET STATION, COMMONWEALTH ELECTRIC COMPANY, CHICAGO.

		Corrected to	Correction, Per Cent.*
Duration of test	.....	.....	.....
Speed, revolutions per minute	750	.....	.....
Average steam pressure, pounds gauge	179	179	0.0
Average vacuum, inches (referred to 30 in. barom.)	29.55	28.5	+9.45
Average superheat, degrees F	116	100	+9.28
Average load on generator, kilowatts	8070	.....	.....
Steam consumption, pounds per kilowatt-hour	13.0	.....	.....
Net correction, per cent	.....	.....	+10.73
Corrected steam consumption, pounds per kilowatt-hour	.....	14.40	.....

* The following percentage corrections were used:

Superheat correction 8 per cent. for 100° F.

Vacuum correction 9 per cent. for 1 inch from curve in Fig. 78. } *G. E. Bulletin*, No. 4531.

Pressure correction not given.

These results show a difference of only .20 pound in the corrected steam comsumption, so that for exactly the same conditions these two machines would probably give approximately the same economy. Each turbine is doubtless best for the special conditions for which it was designed.

These results are *equivalent* to respectively 9.58 pounds and 9.72 pounds per **indicated horsepower,** assuming 97 per cent as the efficiency of the generator and 91 per cent as the mechanical efficiency of a large Corliss engine according to figures given by Stott.*

From experience with other similar turbines it seems as if the vacuum corrections given are too low for each turbine. The correction for the Curtis turbine was obtained from the curve in **Fig. 78** as given between 27 and 28 inches, while it was used between 28.5 and 29.5 inches, where the curve of steam consumption most likely slopes somewhat as shown by the dotted curve in the figure, which was derived from the percentage change of the theoretical steam consumption calculated from the available energy. The correction of 2.7 per cent. per inch of vacuum for the Westinghouse-Parsons turbine is probably too low also, although the percentage correction would not be nearly as large as for the Curtis. If both of these corrections are too low, the effect of increasing them would be to increase the corrected steam consumption of the Curtis turbine and reduce that of the Westinghouse-Parsons.

Large sizes of steam turbines are also made by the Allis-Chalmers Company, but sufficient data are not given with published tests to make a comparison here.

Tests of a 5000-kilowatt Curtis and a 7500-kilowatt Westinghouse-Parsons turbine are also recorded here for comparison. The two tests are corrected to the assumed standard conditions of 173.7 pounds gauge pressure, 28 inches vacuum, and 0° F. superheat. For the test of the Curtis machine the same percentage corrections were used as for the 9000-kilowatt turbine;

* *Electric Journal*, vol. IV, No. 7. It is stated also in this article that the vacuum correction of a Westinghouse-Parsons turbine is 3.5 per cent. per inch between 28 and 28.5 inches. Jude states that the vacuum correction for Parsons turbines (English) is five to six per cent.

and for the test of the Westinghouse turbine the vacuum correction is that given in the footnote at the bottom of page 170 (3.5 per cent. per inch), while the other percentage corrections are the same as in the preceding test of a similar machine. The Westinghouse turbine was operated with wet steam. In a test of a reciprocating engine the equivalent economy with dry steam is calculated by merely subtracting the percentage of moisture, but **in a turbine test the correction is generally stated as being a little more than twice the percentage of moisture.*** In other words, in a turbine test the moisture must be subtracted twice. The reason for this difference in the methods of correcting water rates of engines and turbines is the very large increase in the disk and blade rotation losses in wet steam (cf. Fig. 69).

5000-KILOWATT FIVE-STAGE CURTIS TURBINE, L STREET STATION, BOSTON EDISON COMPANY. Tested Jan. 29, 1907.

		Corrected to	Correction, per Cent.
Duration of test, hours	.....	.....	.....
Speed, revolutions per minute	720	.....	.....
Average steam pressure, pounds gauge	173.7	173.7	0
Average vacuum, in. (referred to 30 in. barom.)	28.8	28	+ 7.20
Average superheat, degrees F	142	0	+11.36
Average load on generators, kilowatts	5195	.....	.....
Steam consumption, pounds per kilowatt-hour	13.52	.....	.....
Net correction	.....	.....	+ 18.56
Corrected steam consumption, pounds per kilowatt-hour	.....	16.03	.....

7500-KILOWATT WESTINGHOUSE-PARSONS TURBINE (SINGLE FLOW TYPE), INTERBOROUGH RAPID TRANSIT COMPANY, NEW YORK.

		Corrected to	Correction, per Cent.
Duration of test, hours	3	.....	.....
Speed, revolutions per minute	.....	.....	.....
Average steam pressure, pounds gauge	149.7	173.7	−2.4
Average vacuum, in. (referred to 30 in. barom.)	27.70	28	−1.05
Average moisture, per cent	3.0	0	−6.0
Average load on generator, kilowatts	7135	.....	.....
Steam consumption, pounds per kilowatt-hour (wet)	17.79	.....	.....
Net correction	.....	.....	−9.45
Corrected steam consumption, pounds per kilowatt-hour	.....	16.10	.....

* This correction for moisture has been determined by experiment.

It is stated that the steam consumption of the Interborough Company's turbine is 15.87 pounds at full load and 15.54 pounds at 9000 kilowatts when the overload valve opens. The generator connected to this turbine is rated at only 5500 kilowatts. With a generator more nearly the rating of the turbine it is probable still better results would be secured.

Corrected tests of a 2000-kilowatt Curtis and a 1000-kilowatt Westinghouse-Parsons turbine-generator are also given here. Assumed standard conditions and corrections are taken the same as in the two tests preceding, except that the Westinghouse test is corrected to the steam pressure of the Curtis test.

2000-KILOWATT CURTIS TURBINE, COMMONWEALTH ELECTRIC COMPANY CHICAGO. Tested May, 1905, by Sargent & Lundy.

		Corrected to	Correction, per Cent.
Duration of test, hours	1.25	.....	.....
Speed, revolutions per minute	900	.....	.....
Average steam pressure, pounds gauge	166.3	166.3	0
Average vacuum, in. (referred to 30 in. barom.)	28.5	28	+ 4.0
Average superheat, degrees F	207	0	+16.53
Average load on generators, kilowatts	2024	.....	.....
Steam consumption, pounds per kilowatt-hour	15.02	.....	.....
Net correction	.....	.....	+20.53
Corrected steam consumption, pounds per kilowatt-hour	.....	18.10	.....

1000-KILOWATT WESTINGHOUSE-PARSONS TURBINE. Tested September, 1907, by S. Gilliard.

		Corrected to	Correction, per Cent.
Duration of test, hours	1	.....	.....
Speed, revolutions per minute	1800	.....	.....
Average steam pressure, pounds gauge	147.6	166.3	−1.87
Average vacuum, in. (referred to 30 in. barom.)	27.02	28	−3.40
Average moisture, per cent	.75	0	−1.50
Average load on water brake, horsepower	1503.5	.....	.....
Equivalent average load in kilowatts (generator efficiency 94%)	1055	.....	.....
Steam consumption, pounds per brake horsepower-hour (wet)	13.61	.....	.....
Steam consumption, pounds per equivalent kilowatt-hour (wet)	19.35	.....	.....
Net correction	.....	.....	−6.77
Corrected steam consumption, pounds per kilowatt-hour	.....	18.04	.....

Curves in **Fig. 79** are given to compare the steam consumption of a standard 5000-kilowatt turbine-generator and a 4-cylinder compound 5000-kilowatt reciprocating steam engine of

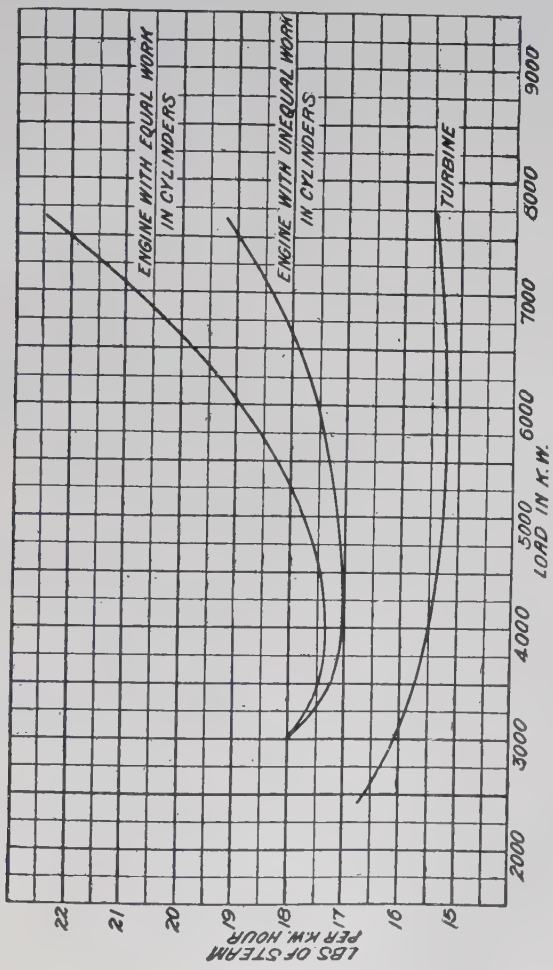

FIG. 79. Comparison of a 5000-Kilowatt, 4-Cylinder Compound Engine with a 5000-Kilowatt, 5-Stage Turbine Operating under the Same Conditions. Steam Pressure, 175 pounds, 0 degrees F. superheat.

the type used by the Interurban and Metropolitan Companies of New York, assuming both units operating under the same conditions. These curves illustrate the good overload economy

of the turbine, showing that at 50 per cent. overload the engine designed for equal work in the cylinders requires for the same output 43 per cent. more steam than the turbine.

These results are particularly interesting because the peak capacity of a station with a given equipment of boilers and auxiliaries is increased in proportion to the reduction of steam consumption at overloads.

For a given investment the turbine gives a much larger range

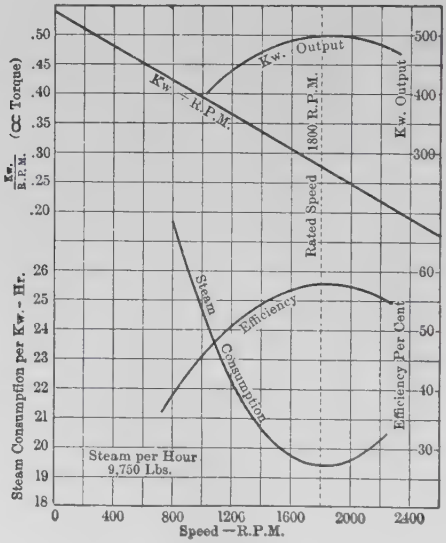

FIG. 80. Torque, Speed Output, and Efficiency Curves of a Typical 500-Kilowatt Steam Turbine.

of load and, moreover, affords the means by which the peak capacity of existing stations can be greatly increased.

The speed output curve (Fig. 80) is very useful to engineers to determine if a turbine is running at its best speed. If the corresponding curves of steam consumption per kilowatt output (usually called water rate per kilowatt) and **efficiency** are calculated according to the form on page 402, a great deal of information is obtained about the operation and economy of a turbine. The **torque line** in Fig. 80 is always drawn straight, just as a

Willans flow line. A curve of **total** steam consumption is usually a straight line for the normal operating limits of a turbine, but usually becomes curved when a by-pass valve opens on overload, or when the turbine is over its capacity so that the pressures are not normal in the stages.

The torque line shows why a **turbine engine is not adaptable to automobiles.** The starting torque of a small commercial turbine is not large, so that starting would be difficult with a small wheel, and reversing and speed reduction would be as difficult as with a gasoline engine. The reciprocating steam engine as well as the gasoline engine has, therefore, advantages over the steam turbine for this service.

Attempts have been made to use steam turbines for **airplane** service but the principal difficulty has been to design a lightweight condenser which would operate satisfactorily at high altitudes. Steam turbines of 1000 horsepower have been designed for this kind of service.

CHAPTER VII.

COMMERCIAL TYPES.

In some respects the order in which the commercial types of steam turbines are discussed on the following pages is somewhat arbitrary; but, essentially, it is in the order of relative simplicity. De Laval and Parsons, of the modern designers, were first in the field. They were in fact pioneers in the development of commercial steam turbines, and other designers have followed more or less in their steps. The reasons for giving precedence to the types which they developed are therefore obvious, and no other explanation is needed.

Because of its greater simplicity the commercial De Laval is first discussed, and is followed with descriptions of the various forms of the Parsons turbine and the more recent types.

DE LAVAL STEAM TURBINE.

Rational engineering development is nowhere better exemplified than in the successful performance of the De Laval steam turbine. In nearly every respect, even to details, some of these designs are still practically the same as the turbines designed under the personal direction of De Laval.

The essential elements of the original De Laval turbine are: (1) the **nozzles** in which the steam expands; (2) a **wheel or disk** with suitable blades; (3) a **slender shaft** on which the wheel is mounted; and (4) a set of **reducing gears** to change the high speed of the turbine shaft to a lower speed adaptable for driving machinery.

Drawings of a small De Laval turbine are shown in **Fig. 82.** The turbine wheel, **W,** is supported upon the flexible **shaft** between the bearing, **Z,** provided with a spherical seat, and the gland or stuffing-box, **P.** Teeth are cut into the metal of the turbine shaft to make the pinions on each side of **K** fit the gear

wheels **A** and **B**, from which the power is transmitted. The design shown here is intended for driving two electric generators which are direct-connected by means of the couplings shown at the left in the figure.

De Laval turbine-generator sets of from 50 horsepower upwards are supplied with two gear wheels, two power shafts, and two dynamos for each turbine wheel, while the smaller sizes

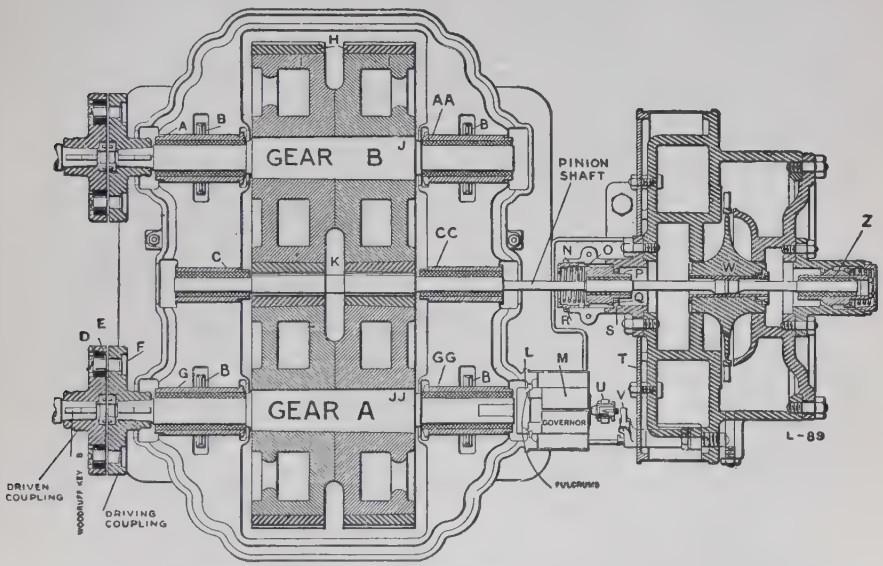

FIG. 82. Section of a De Laval Single Stage Turbine with Two Power Shafts (on Gear Wheels A and B).

have gear arrangements for a single generator. Because of the higher speed at which the small sizes operate (see page 204), making the pressure on the gear teeth considerably smaller than with the larger sizes, more power can be transmitted with a single set of gears. The large size of the gear wheels compared with the turbine is a noticeable feature of these turbines.

Turbine Wheel. On account of the very high speeds at which these turbines operate, the wheels or disks require very careful designing. In the small and medium sizes, a wheel similar to

the drawing in **Fig. 83** is used. When this design is used, the hub of the wheel is bored out and a thin steel bushing is drawn into it by means of a nut shown in the figure at the right-hand end. Before this bushing is put into the wheel, it is forced on the shaft

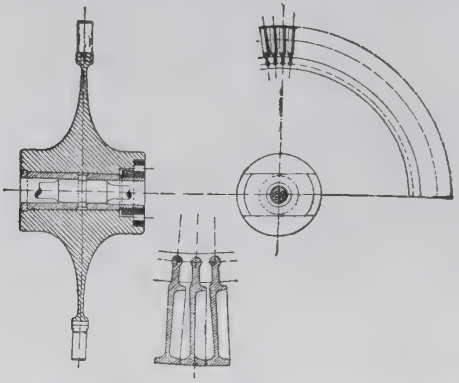

FIG. 83 De Laval Turbine Wheel with a Hole at the Center and Details of the Blades.

and pinned in place as shown. The wheel can be removed from the shaft by taking off the nut and drawing it from the bushing.

The strength of a disk, or a wheel of a disk type, in which there is a hole at the center is at best not more than half as strong as one

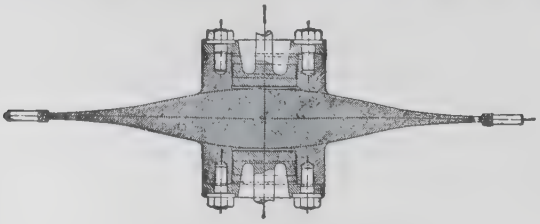

FIG. 84. De Laval Turbine Wheel without a Hole at the Center.

without a hole.* On this account in the larger sizes of De Laval turbines it has been found necessary to use the design shown in **Fig. 84**. In this arrangement a solid disk is permitted. The hub is recessed at each end, and the flexible shaft is made

* An explanation of this remarkable phenomenon is given on page 463.

with enlarged flanged ends which fit into the recesses and are bolted solidly in place. The recesses and flanges are machined with a four per cent. taper in order that the parts may be accurately centered and fitted.

This form of wheel disk with the section increasing from the rim towards the hub is arrived at by proportioning it to have equal unit stresses throughout. But this condition does not hold true at the rim, where just below the blades annular grooves are turned on each side. Weakening of the wheel at the rim is a very good method of providing for abnormal stresses that result in case of a failure of the governor to control the speed. The purpose in making these grooves is to have the wheel burst at this reduced section where the stresses per unit of area are about 50 per cent. larger than at any other part of the wheel, rather than near the center where the damage from failure would be so much greater. At normal speed the factor of safety, at this smallest section, is about five, and since the unit stresses vary as the square of the speed,* the wheel will fail at this place at a little more than twice the rated speed. As these wheels are constructed, no great damage to the turbine will result, therefore, from the failure of the wheel rim. It has been shown by actual experiments with such wheels that when failure occurs, the rim holding the blades is broken up into very small pieces which will not damage the wheel case. It is stated, however, that wheels without this reduced section, when tested to failure, have been broken up into two or three large pieces by bursting through the center, and these pieces have been driven through an experimental wheel casing made of two-inch steel castings.

There is also another consideration that is especially interesting to engineers. When a portion of the rim breaks off the wheel becomes unbalanced, and as the clearance between the heavy hub of the wheel and the safety bearings in the surrounding casing is very small, as can be seen in Fig. 82, the flexibility of the

* Centrifugal force $= \frac{WV^2}{gr}$ (see page 444) and is therefore proportional to the square of velocity (speed). The factor of safety at other sections of a De Laval wheel is about eight.

shaft will permit the hub of the wheel to come into contact with the circular openings in the casing into which it extends. The friction of these surfaces will act as a brake and assists in bringing the wheel to rest. And this is easily accomplished, because with the blades removed the steam no longer acts to rotate the wheel.

The diameters of the wheels are relatively small, as can be seen from the following table:

Horsepower	5	30	100	300
Revolutions per minute	30,000	20,000	13,000	10,000
Diameter to center of blades, inches	3.94	8.86	19.68	29.92
Blade speeds, feet per second	523	785	1134	1310

Wheels for De Laval turbines are usually made of a special forged nickel steel said to be rather high in carbon.

Nozzles. **Fig. 85** is a typical illustration of a 20-kilowatt De Laval turbine-generator and gives a general idea of how the nozzles which direct the steam against the blades are arranged around the periphery of the turbine wheel. They are attached to the turbine mechanically by being fitted into the circumference of the steel casting which serves as the casing for the wheel. The number of nozzles varies according to the size of the turbine. The nozzles are provided with hand valves, which can be seen in the figure, by which they can be closed when the turbine is running at light loads. In this way some of the nozzles are "cut out" and a relatively high efficiency is obtained at light loads. In this particular case, about half of the openings in the casing for nozzles are closed by plugs; but by removing these plugs and inserting nozzles instead, the capacity of the turbine would be greatly increased.

The nozzles are the only parts of a De Laval turbine that are changed to make it suitable for any particular pressure, degree of superheat, or vacuum. The ratio of the admission (usually boiler) pressure to the exhaust pressure is the most important factor influencing the design of a nozzle. Briefly stated this ratio of pressures determines the areas of the cross-section of the nozzle at the throat and at the mouth, and therefore its divergence or taper.

For the same output more steam is required at a low pressure than at a higher pressure. De Laval turbines are readily adjusted for a change of boiler pressure by adding more nozzles if they are

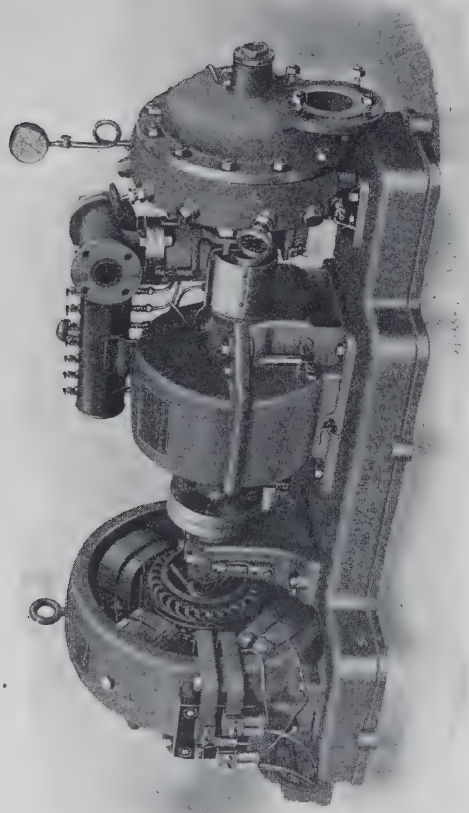

FIG. 85. 20-Horsepower De Laval Single Stage Turbine-Generator.

needed. Sometimes turbines are fitted with two sets of nozzles, one suitable for condensing and the other for non-condensing operation.

Reamers are used to produce the required taper on the inside of these nozzles. In the works at Trenton over 600 reamers are kept in the tool room. The taper of the nozzle ranges from six to twelve degrees, and the clearance between the mouth of the nozzle and the blades (axial clearance) is about an eighth of an inch.

Blades. De Laval blades are made of drop-forged steel and have bulb shanks which are fitted into suitable slots in the wheel, shown in Fig. 83, which are milled across the rim and then drilled. The blades are lightly calked to secure them in place. At the upper ends of the blades they are provided with "extensions" which are designed to make adjoining blades fit closely and thus form a continuous ring over the blades at the periphery of the wheel. Details of these blades are shown more clearly in Fig. 64.

Shaft. Small De Laval turbines have **two important features** distinguishing them from all other types. The first is the **long diverging nozzle** with the hand wheel control already mentioned; and the second is the **slender flexible shaft** * of the turbine. A wheel revolving at a very high speed tends to rotate about its center of gravity. If it is mounted on a stiff, unyielding shaft, of which the axis does not pass through the center of gravity of the wheel, this tendency causes violent vibrations of the wheel and shaft due to the very large centrifugal forces. It is stated that a weight of one ounce attached at the circumference of the wheel of a 300-horsepower De Laval turbine will produce an unbalanced centrifugal force of nearly 2000 pounds. It is mechanically difficult and almost impossible to construct a wheel so perfectly balanced that its center of gravity will exactly coincide with the geometric center of the shaft on which it is mounted. De Laval, therefore, devised a long, slender shaft which, as the speed of the wheel increases, yields somewhat and allows the latter to assume its own position of rotation about its center of gravity.

* The diameter of the shaft of a 100-horsepower De Laval turbine is 1 inch and of a 300-horsepower turbine is about $1\frac{5}{16}$ inches.

The wheel is not mounted midway between the bearings but considerably nearer the spherical seated bearing *Z*, Fig. 82, at the governor end. Now when the wheel is started up from rest, if its center of gravity is not precisely in the axis of the shaft, it will bend, and the plane of revolution of the wheel is then no longer perpendicular to the axis of rotation. When, however, a sufficiently high speed is reached, so that **gyroscopic action** is great enough to pull this plane back to a position perpendicular to the axis of rotation, a "node" is formed at the center of the hub and rotation will then take place about the center of gravity of the system. The speed at which the amplitude of vibration is greatest is called **critical.***

Bearings. Typical bearings of De Laval turbines are illustrated in the section drawings in **Fig. 82.** At the right-hand or "governor" end there is a **spherical seated bearing (Z).** A design of this kind is used for the purpose, primarily, of giving greater flexibility to the shaft and to take the small end thrust exerted on the wheel by the steam issuing from the nozzles at a very high velocity. In single wheel turbines of the De Laval type this pressure or thrust is, however, very slight, as the steam is expanded to the exhaust pressure before it leaves the nozzles. It is obvious, therefore, that the wheel rotates in steam of very nearly the same pressure on both of its sides. Such a design has also the advantage of being self-aligning. A helical spring shown in the same figure holds the spherical bearing against its seat in the turbine casing. On the other side of the turbine wheel the shaft passes through a loose-fitting bearing, **P,** serving primarily as a gland or stuffing-box to prevent the leakage of steam from the casing. The shaft does not pass through the casing on the right-hand side, so that no precautions are necessary to prevent leakage of steam on that side. At each side of the pinions of the reduction gearing, the turbine shaft is supported on plain white-metal (Babbitt) bearings **C** and **CC.** The sur-

* "Critical speed" is the name given to that speed of a wheel at which it tends to rotate about its own center of gravity. In the De Laval turbines a critical speed occurs at about $\frac{1}{6}$ to $\frac{1}{8}$ of the normal running speed.

face speed in these bearings is usually designed to be about 70 feet per second.

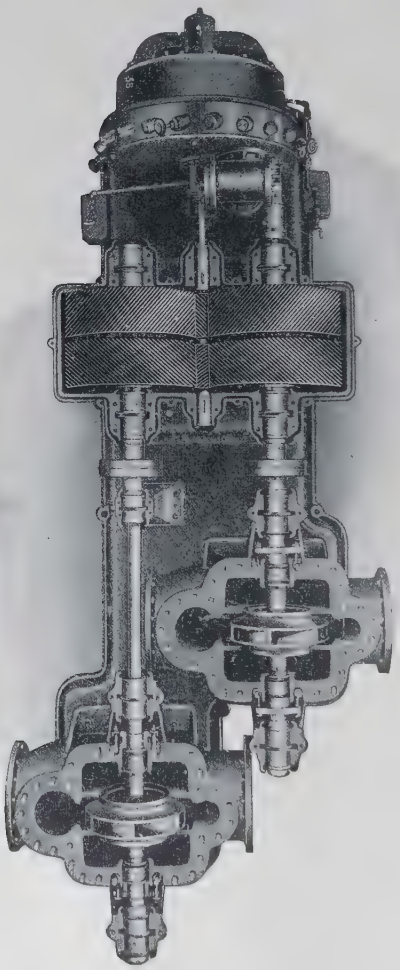

FIG. 86. 300-Horsepower Steam Turbine Driven Centrifugal Pump, with Pump and Gear Case Covers Removed.

Speed-reduction Gears. On account of the high speed of the turbine shaft, reduction gears are required to bring the speed within practicable limits for utilizing the power. The reduction

is usually about ten to one, and is accomplished by means of small pinions on the turbine shaft meshing with steel helical gear wheels. The teeth of the pinions are very small and are cut directly into an enlarged section of the flexible shaft.* The teeth for this gearing are cut spirally at an angle of 45 degrees. As indicated in Fig. 86 the teeth on one side are cut on a right-hand and on the other side on a left-hand spiral. This method effectually prevents any movement of the shaft in the direction of the axis and balances the thrust of the gears. Previous to the time when De Laval demonstrated that gears could be operated at a linear velocity of more than 100 feet per second, the high speeds which he introduced were not considered practically possible. His success at these high speeds was due largely to the fine pitch† and spiral angle of the teeth. It is thus possible to bring a large number of teeth into mesh at the same time, so that the working pressure on each tooth is made very small and abrasion is reduced to a minimum.

The reduction gears are enclosed in a casing entirely separate from that around the turbine wheel. This casing prevents dust and grit from getting into the gears and avoids accidents from persons or objects falling upon them. With careful attention these gears sometimes run for several years without visible wear. Formerly the gear wheels were made of bronze, but experience showed that the teeth became crystallized after a few years of operation, and pieces of the teeth which were sometimes broken off, were liable to injure other teeth. Such gears should always be supplied with a little oil for lubrication.

This speed-reduction gearing introduces two important disadvantages: first, the friction loss is considerable; and second, the construction is necessarily expensive. The friction loss, obviously, will depend largely on the quality of workmanship. It is stated that this loss in the gears is about 5 per

* The pinions are said to be made of .60 to .70 carbon steel, and the teeth of the larger gear wheels are cut in .20 carbon steel of a grade similar to that used for locomotive wheel tires.

† The pitch of the gears varies from .15 inch in the smallest, to .26 inch in the largest sizes.

cent.* of the power transmitted when they are in good condition, and sometimes as much as 10 per cent. in moderately worn gears.

After a few years of service it is usually found that the steam consumption of a De Laval turbine is slightly greater than when it was new. This poorer economy is probably due to the increased loss in the gears from wear as well as to the wearing away of the blades on the turbine wheel, which by changing the shape of the blades causes a loss of efficiency.

Governor. Types of De Laval governors are shown in Figs. 162, 163, and 174b, pages 304 and 329, where methods of governing are discussed. The valve arrangement controlled by the governor is a plain throttling type.

DE LAVAL MULTI-STAGE TURBINES.

For a number of years the De Laval Company confined its efforts to the construction of single stage turbines described in the preceding sections. In the last few years there has been a growing demand for larger sizes and multi-stage De Laval turbines have been designed to meet this demand. Single stage turbines are obviously of limited capacity. The maximum output of a thirty-inch De Laval turbine with a single wheel is about 500 kilowatts. In order to increase the capacity without increasing the diameter of the turbine wheels beyond the practicable limits of construction, it is necessary to resort to the use of multiple stages. By using a sufficient number of stages the speed of the turbine can be reduced to any desired point, the designer given practically a free choice as to the proper relations of wheel diameters, capacity, speed, length of blades, and other variables. After the most suitable speed for best

* Regarding these losses the results of experimenters differ a great deal. Lewicki found the gearing and bearing loss in a 30-horsepower De Laval turbine-generator to be 7.5 per cent. of the full load output. Delaporte states that the gearing losses of a 200-horsepower De Laval turbine are about 1 per cent. when new; and he states also that *in his opinion* the combined gearing and bearing friction losses of a 300-horsepower De Laval turbine should be taken roughly at about 3 per cent.

efficiency has been selected, any further reduction in the speed of the turbine as may be necessary to adapt it to driving a particular machine may be accomplished by means of a suitable reduction gear. For example, De Laval multi-stage turbines, when provided with reduction gears, are suitable for direct connection to standard speed, direct current generators enabling the user to escape all disadvantages inherent in high speed direct current generators, the normal designs of which are ordinarily changed in many respects when they are to be adapted to run at the high speed of turbines. Likewise, the speeds most suitable for centrifugal pumps and blowers are, for many services, lower than the speed at which turbines should be operated, and these, also, may be driven through the medium of gears. The use of gears permits the use of turbines for belt or rope driving with pulleys and sheaves of ordinary dimensions and running at standard "rim" velocities. Further, a De Laval multi-stage geared turbine can be connected to existing shafting by belts to supplement the power delivered by reciprocating engines already in service.

Turbines of this type, however, are also supplied without gearing, for driving machines the speed of which approximates that of the turbine, such as large alternators, centrifugal air compressors, and high head centrifugal pumps.

For any given capacity and steam condition there is, for each type of turbine, a speed which will give the highest efficiency, and it is a problem for the designer to make the proper arrangement of blade lengths, blade angles, disk diameters, etc., so as to secure the ratio of steam velocity to blade speed that will secure the best efficiency. In medium sizes, that is, up to about 3000 kilowatts, the multi-stage impulse turbine, in some cases fitted with velocity stages in the first pressure stage, is the most efficient by quite an appreciable margin. Comparing the multi-stage turbine with the reaction turbine in small sizes under these conditions, the high pressure blades of the reaction turbine become very short in proportion to the leakage path through the clearance at the ends of the blades. Due to the

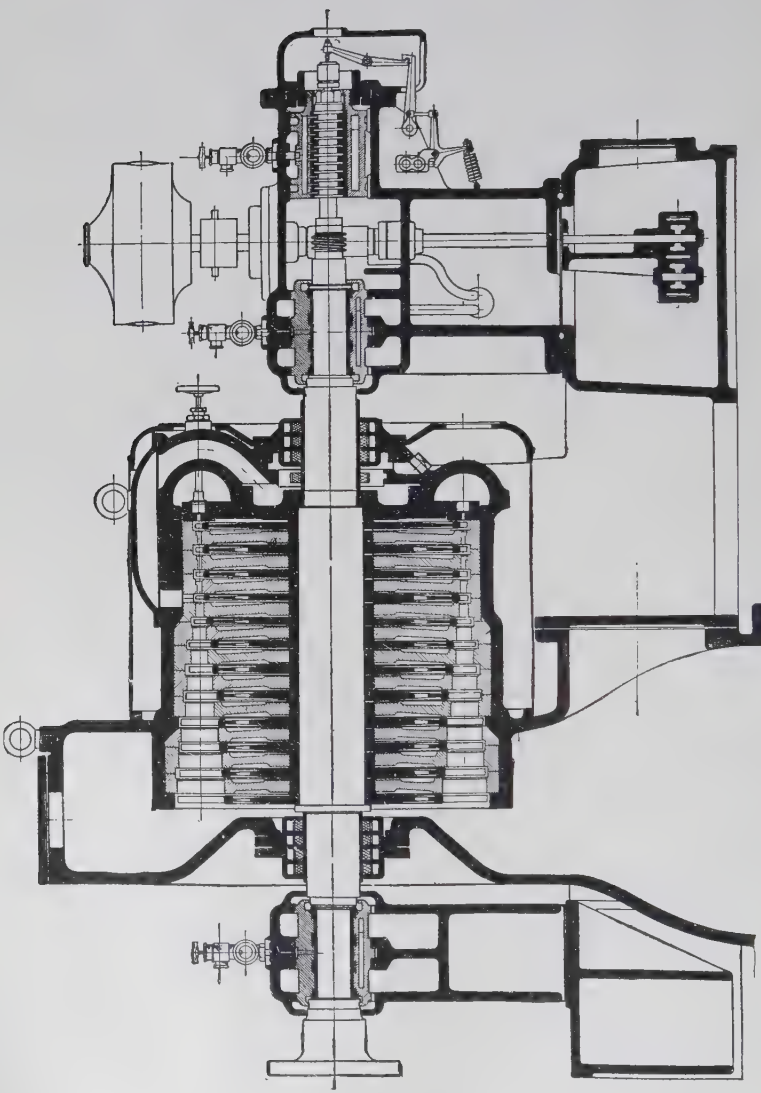

FIG. 87. Section of De Laval Multi-stage Turbine.

fact that the leakage takes place over the ends of the moving blades and under the ends of the stationary blades of reaction turbines, it is not feasible to use types of packing which is applied so effectively for packing the joints between the shafts and diaphragms of multi-stage turbines.

A sectional drawing of a typical De Laval multi-stage steam turbine is shown in **Fig. 87.** The rotating part of the turbine consists of a heavy shaft upon which is mounted a series of disks for carrying the blades. The shaft and the blade disks are shown in **Fig. 88.** Each blade disk revolves in an independent cham-

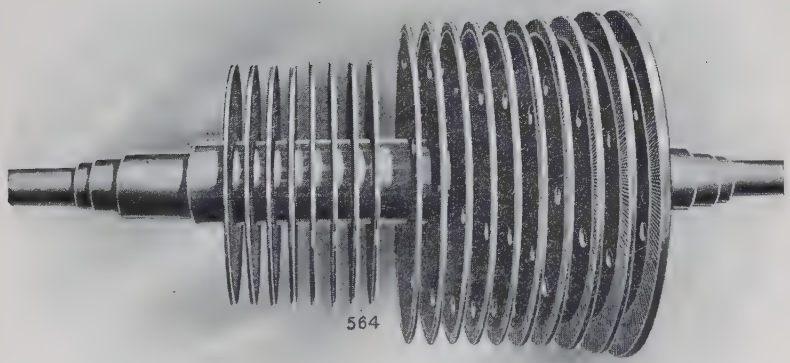

FIG. 88. Shaft and Blade Disks of De Laval Multi-stage Turbine.

ber formed between diaphragms held in a cylindrical casing. Steam is admitted to the steam chest at the right-hand end of the casing and then flows through the nozzles of the first stage and discharges upon the blades of the first disk.* Next the

* In the latest designs of these turbines, there are two blade disks in the *first stage* with a set of intermediate blades, making two velocity stages similar to Fig. 39.

steam flows through guide vanes in the diaphragm separating the first stage from the second and impinges upon the second blade disk, and so on through succeeding stages of the turbine. The nozzles of the first stage occupy only a portion of the circumference, thereby avoiding the difficulties of very short blade

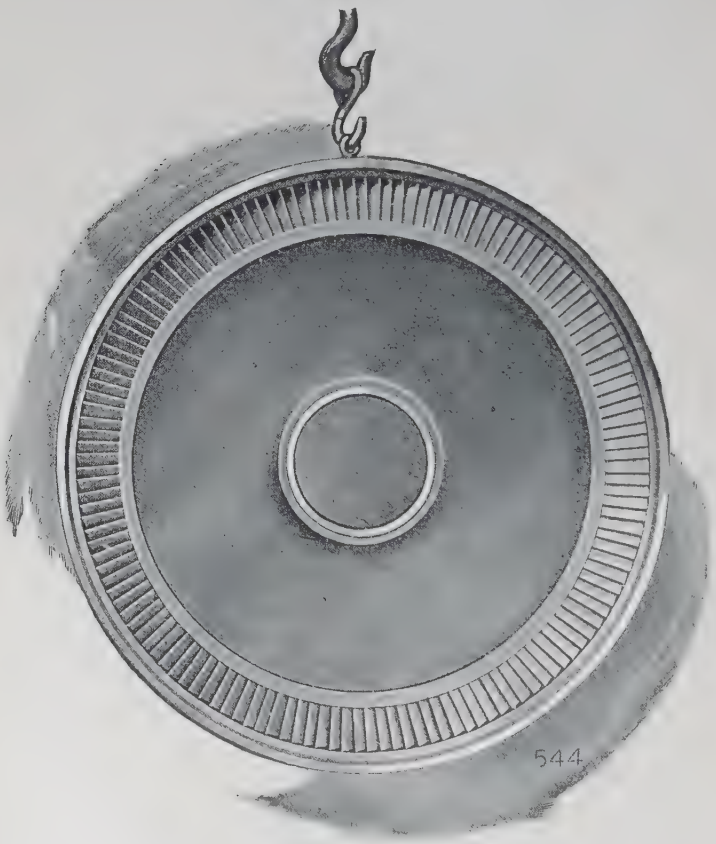

Fig. 89. Diaphragm (showing nozzles) of a De Laval Multi-stage Turbine.

lengths which would otherwise be necessary if the admission of steam were permitted all around the circumference in this stage.

The blades or " buckets " of all De Laval turbines are drop

forgings and the bulb shanks are accurately machined to fit the corresponding recesses in the blade disks.

With the exception of the nozzles in the first stage, which have been described in connection with the single stage De Laval turbine, the nozzles of the succeeding stages are formed by the

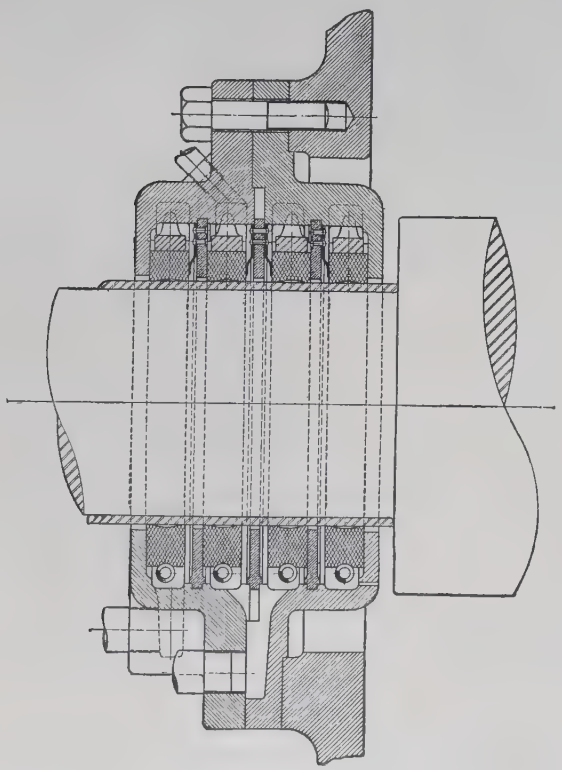

Fig. 90. Carbon Packing on Shaft of Turbine.

accurate locating of adjacent guide vanes made of nickel-bronze, accurately formed in dies and finally hammered to give the surface a hard polish, which improves the density and strength of the metal. They are spaced and located upon the rim of the diaphragm by pins and are held in place by a solid steel band shrunk over their tips. Two pins are used for each vane

to determine its proper angle, and therefore, in connection with the shape of the vanes, to fix the contour and the cross-sectional area of the nozzles formed between the successive vanes.

The cast-iron disks used for the diaphragms are perforated at the center and are fitted with removable labyrinth packings in order to minimize the leakage of the steam from stage to stage between the diaphragms and the cylindrical wheel hubs. A complete diaphragm of a De Laval multi-stage steam turbine is shown in **Fig. 89.**

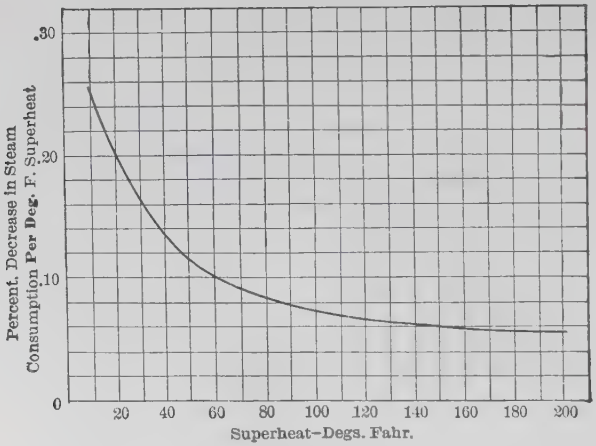

FIG. 91a. Percentage Curve for Correcting De Laval Turbine Tests for Superheat.

The carbon packing used at the low-pressure end of De Laval multi-stage turbines is shown in **Fig. 90.** Provision is made for introducing live steam at reduced pressure between the second and third rings as shown so that any leakage into the turbine casing will be steam from this source and not air from outside the casing.

Superheat, Vacuum, and Economy Curves. **Fig. 91a** shows by percentages the effect of **superheat** on the steam consump-

tion. For low values of superheat the gain for a De Laval turbine is much greater than for larger amounts of superheat. Such curves on a percentage basis are sometimes very serviceable to show striking variations clearly. **Fig. 91b** is a similar percentage curve to show how the **vacuum** influences the steam consumption. With a high vacuum the improvement in economy is much more marked than at low values. **Fig. 91c** shows approximately the steam consumption for small sizes of De Laval

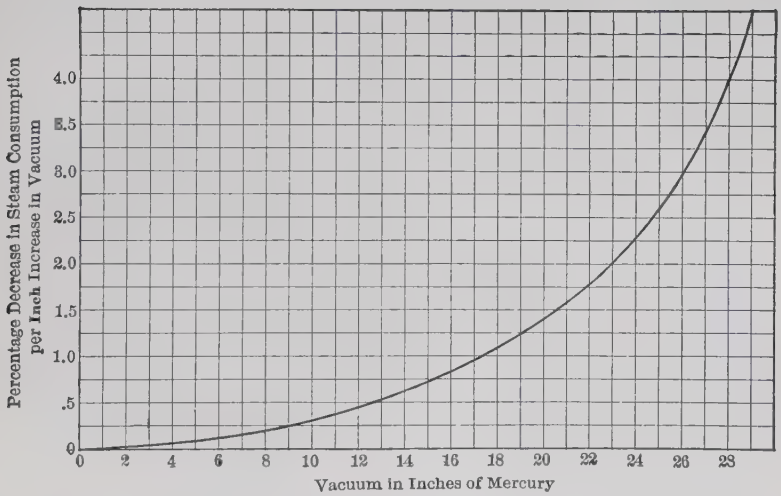

FIG. 91b. Percentage Curve for Correcting De Laval Turbine Tests for Vacuum.

turbine-generators operating non-condensing or with 28 inches vacuum at 165 pounds per square inch absolute pressure, and 0 degrees F. superheat.

It is stated the half load steam consumption of a single stage De Laval turbine is 12 per cent. greater than at full load, and that at quarter load it is 25 per cent. more than that at full load. For such good performance at light loads it is necessary to operate the turbine with no more valves open than are needed.

Because the valves must be operated by hand such good economy could probably not be obtained with a rapidly fluctuating load.

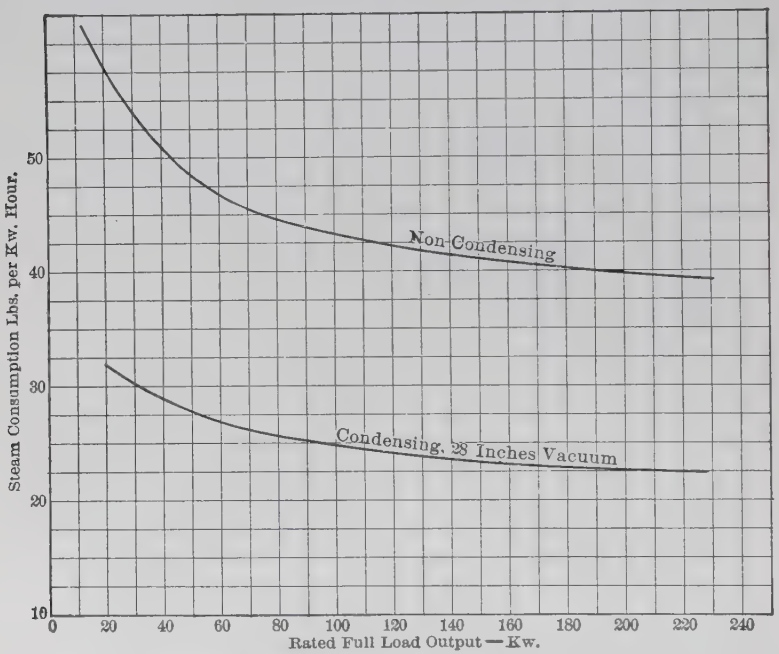

FIG. 91c. Approximate Steam Consumption of Small Sizes of De Laval Turbine-Generators. Dry Saturated Steam at 165 Pounds per Square Inch Absolute Pressure.

Turbine Losses. The following table shows how the losses in a single stage De Laval 200-kilowatt turbine-generator have been divided up by Stevens and Hobart:

Nozzle losses	12 per cent.
Radiation losses and leakage	1 " "
Rotation losses due to the turbine wheel revolving in steam	4 " "
Losses due to the steam traveling over the blades	9 " "
Bearing friction losses	1 " "
Losses in speed-reduction gearing	2 " "
Generator losses	4 " "
Losses due to residual kinetic energy in the steam passing to the condenser	8 " "
Electrical output	59 " "
Total	100 " "

PARSONS TURBINE

The **Parsons type** of steam turbine **differs** from that commonly known as De Laval's principally **in the substitution of stationary blades in the place of nozzles.** These stationary blades are so shaped as to direct the steam upon the moving blades just as nozzles would. In turbines of this type a large number of rows of moving blades are employed, which are attached to the cylindrical surface of a revolving drum, called a **rotor.**

There is also another difference which, from a theoretical viewpoint, makes a Parsons turbine entirely different from other types. All the impulse turbines, of which the De Laval is a good example, make very little, if any, provision for the expansion of the steam in the **moving** blades, while the Parsons type is designed to give approximately as much expansion of the steam in the moving as in the stationary or "guide" blades. In turbines of this type **each set of one row of moving and one row of stationary blades** is called, technically, a **stage.**

Compared with the De Laval turbine in which the blades of a single wheel revolve in a medium of uniformly low density with the pressure very nearly the same on both sides of the wheel, most of the blades of a Parsons turbine revolve in steam of high density. Blades at the admission end revolve in steam at very nearly the boiler pressure, and only those at the low-pressure end are in steam of low density.

In the Parsons turbine there is a considerable drop in pressure in every row of blades, and consequently a **difference in pressure between the two sides of every row,** which produces a leakage of steam over the edges of the blades, increasing with the amount of radial clearance between the stationary and moving parts.

Because of the large number of blades, this leakage of steam is a factor which on account of its magnitude must receive most careful attention and investigation by designers. It is a matter of the greatest importance, therefore, in designing turbines of the Parsons type to make radial clearances as small as possible, consistent with proper allowances for the expansion due to un-

equal heating of the parts,* which in a turbine with a large number of stages is a very important consideration. **Fig. 91d** is a section of a typical Parsons rotor and casing showing by arrows the leakage spaces for steam through the radial blade clearances *a* and *b*.

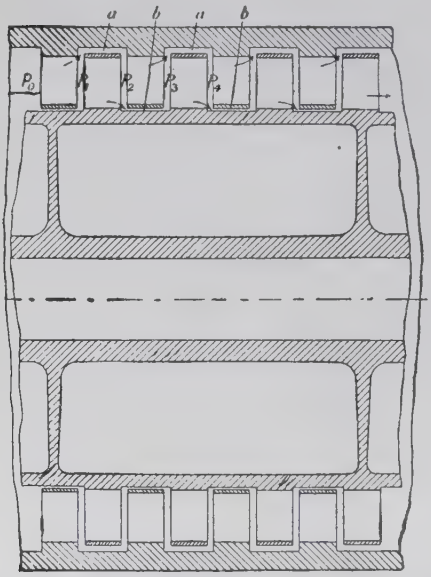

FIG. 91d. Section of a Typical Parsons Rotor and Casing Showing the Radial Blade Clearances.

A section of one of the early Parsons turbines is illustrated in **Fig. 92.** The turbine rotor consists of a long drum of three different sections supported on the two **bearings** — one at each end. The moving blades are mounted on the circumference of this drum and the stationary blades are fitted in similar rings to the inside of the turbine casing.

The annular space **I** is the steam chest which receives high-pressure steam. The steam passes through the alternate rows of moving and stationary blades of the first section of the rotor, through a second annular space to the blades of the second section which discharge into a still larger annular space, from which it passes through the blades of the last section of the rotor to the exhaust **E.** At the second and third annular spaces, where the diameter of the drum is increased, an unbalanced pressure or thrust toward the right is produced by the pressure of the

* Aside from the question of radial clearance, all other points affecting the design are of minor importance as regards economical and satisfactory operation. The most successful design of a Parsons type is the one which operates successfully with the smallest radial clearances. Unequal expansion of the different parts of the casing and drum introduces factors which are very difficult to estimate. If the blades are made of different materials from the drum, at some temperatures they are likely to be loose.

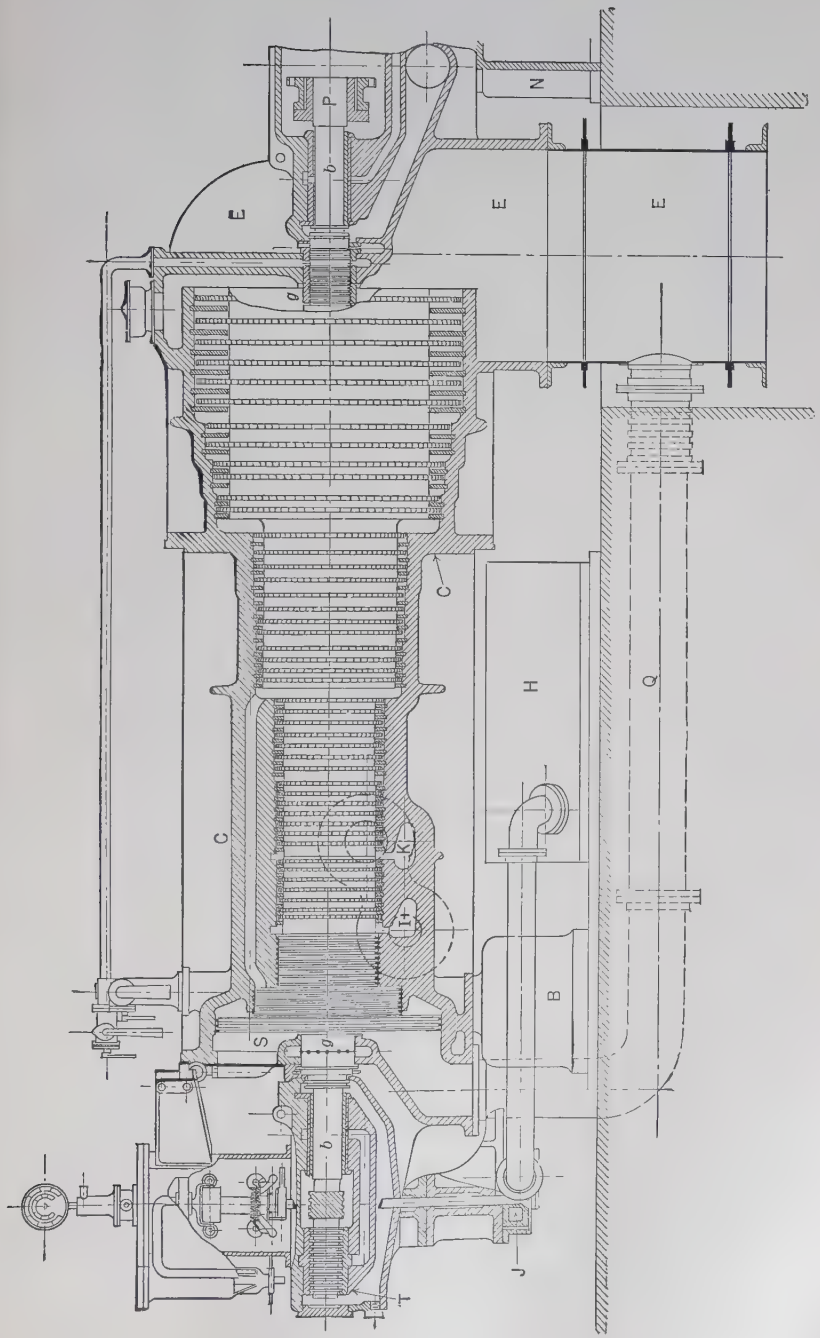

FIG. 92. Section of a Simple Design of Parsons Turbine.

steam; and this thrust is increased by the expansion of the steam in the moving blades (see Fig. 34). To balance this axial pressure, three **balance pistons** are provided at the left-hand end of the casing — one is intended for each section of the rotor. The smallest is made just large enough to equilibrate the thrust due to the blades of the first section; the intermediate piston balances the thrust on the second annular area and that due to the blades of the second section; and the largest piston equilibrates the pressure on the third annular area and the thrust in the third section. Steam passages are cored out in the casing, as shown in the figure, to make each balance piston communicate with its corresponding section of the rotor, so that the pressure in the section is always the same as that acting on the corresponding balance piston. In some designs these cored-out passages are replaced by pipes on the outside of the casing. Small annular grooves are usually cut in the balance pistons to join with similar annular projections in the casing. This construction, called a **labyrinth packing,** makes a devious and obstructed steam path* so as to effectually prevent undue leakage.

The position of the moving blades with respect to the stationary blades (axial clearance) is usually adjusted by means of a **thrust** or **adjustment bearing T** at the extreme left-hand end of the turbine. It consists of a number of rings or collars turned in the steel shaft into which corresponding brass rings in the adjustment bearing are fitted. The upper and lower halves of this bearing are adjustable and are moved by the screws shown in the figure. If the lower half of the bearing is set so that the collars on the shaft are in contact on their left side, the upper half would have the collars in contact on the right side. By this means, when the bearing is once set, the rotor cannot move an appreciable distance either to the right or to the left. A typical adjustment bearing is shown more clearly at the right in Fig. 107. In this design the upper and lower halves are

* The labyrinth packing produces a subdivision of the total drop in pressure between the right side of the small drum and the left side of the large drum that we have instead of a single pressure drop a large number of small pressure drops (due to a whole series of resistances) and the leakage of steam is reduced accordingly.

Labyrinth packings of various types are explained with considerable detail on page 143 and in *Marine Steam Turbines* (U. S. Navy Edition), by J. A. Moyer, published by John Wiley & Sons, New York.

moved by micrometer screws, so that the axial position of the rotor is indicated at all times by the dials on these adjusting screws.

In Fig. 92 a very common method for operating the **governor** of steam turbines is illustrated. A worm gear on the main turbine shaft engages with a gear wheel which by means of other gears rotates the governor shaft.

Detailed Description of Parsons Turbine. Fig. 92 shows a section of a Parsons turbine of the stationary or " land " type. It has a casing *CC* made of cast-iron or cast-steel which is in halves, the upper half being removable for purposes of examination without disturbing the rotor. The main casting for the casing is carried by a saddle or bed-plate **B** which is in turn fastened to the foundation. The turbine is, however, rigidly bolted to only one of the bed-plates, and is free to slide at the other, when its length changes due to changes of temperature.

The steam after passing through the emergency and governor valves enters the casing at **I.** It can then pass completely around the rotor by means of the " steam belt," formed in the cylinder casing. The steam can thus readily enter the annular space occupied by the fixed and moving blades.

Having traversed the full length of this annular space the work of the steam is completed, and it is discharged by way of the exhaust end **EE,** and the exhaust pipe **E** to the condenser.

The **balance pistons** and the **pressure equilibrium passages** are readily observed. One of the equilibrium passages is formed in the main casting to connect the annular chamber at the beginning of the intermediate section with corresponding balance piston. An equilibrium pipe **Q** connects the exhaust main **E** to the space **S**.

Balance pistons are provided on the older designs of Parsons turbines to balance the end thrust. These balance pistons are also called **dummies.** In some recent designs, especially for marine service, a part of the end thrust is taken up by a main thrust bearing, particularly when this main bearing is of a heavy-duty (Kingsbury or Mitchell) type. This results in smaller balance pistons and slightly higher efficiency, as there is much less leakage through labyrinth packings of small diameter.

The second inlet and steam belt, shown at **K,** is for use when the turbine is overloaded. It is connected by means of a by-pass and valve with the inlet **I.** When this valve is opened, the live steam enters the second expansion, or series of blades, without having previously passed through the first. The turbine could then generate enough power to cope with, say, a 50 per cent. overload, though not with the same economy as when working for its designed output with the by-pass closed.

Fig. 93. Propeller of a Water-packed Gland of a Westinghouse-Parsons Turbine.

The bearings shown at **b, b** are of the "flexible" or elastic sleeve pattern, and allow of a slight automatic adjustment of the center line of the rotor. The flexible coupling for connecting the dynamo and turbine shaft is shown at **P.**

Packing Glands. In every turbine, glands or stuffing-boxes must be provided where the shaft passes through the ends of the casing to prevent the **escape of steam** at the high-pressure end and the **entrance of air** at the low-pressure end of condensing turbines. Steam-packed glands of various types are often provided; but in the Westinghouse-Parsons turbine **water-packed glands** are now generally used. This arrangement consists of the propeller of a centrifugal pump (**Fig. 93**) which rotates in the water supplied to an annular groove in the casing. When the turbine is operating the water is thrown outward by the vanes and comp etely fills the space around the periphery of the propeller. By this means the leakage of steam or air is effectually prevented. As there are no rubbing surfaces in these glands and no oil is used, there is no contamination of the exhaust steam.

Blades. The blades of Westinghouse turbines are secured to the rotor by means of slots turned on its periphery, which are

narrower at the top than at the bottom. Into these slots the blades which have been cut at the roots to fit, are put singly. Soft metal spacing pieces of the required shape to fill the space in the slot between the blades are calked to hold the blades firmly by a dovetail construction. This construction is required for the attachment of the *moving blades* to give the necessary support against centrifugal forces; but as the *stationary blades*, which are fixed to the inside of the casing, are not subjected to centrifugal forces, the slots for these blades are not usually dovetailed.

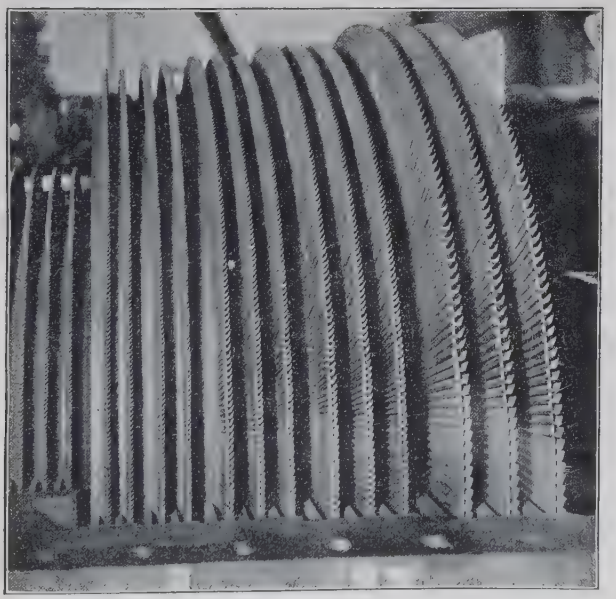

FIG. 95. Blades on the Rotor of a Westinghouse Turbine.

Blade Lashing and Shroud Rings. It has been found necessary to bind the blades together at their ends to make a stronger construction. In the earlier designs of Parsons turbines the blades were usually bound together with wires soldered to their ends. Sometimes, however, the blades were turned over at their outer ends to form flanges which were soldered together into a solid shroud.

Fig. 95 shows several rows of blades of a Westinghouse turbine.

All blades more than two inches long are reënforced by lashing with a wire of special section threaded through punched holes in the ends of the blades. This method of lashing is illustrated

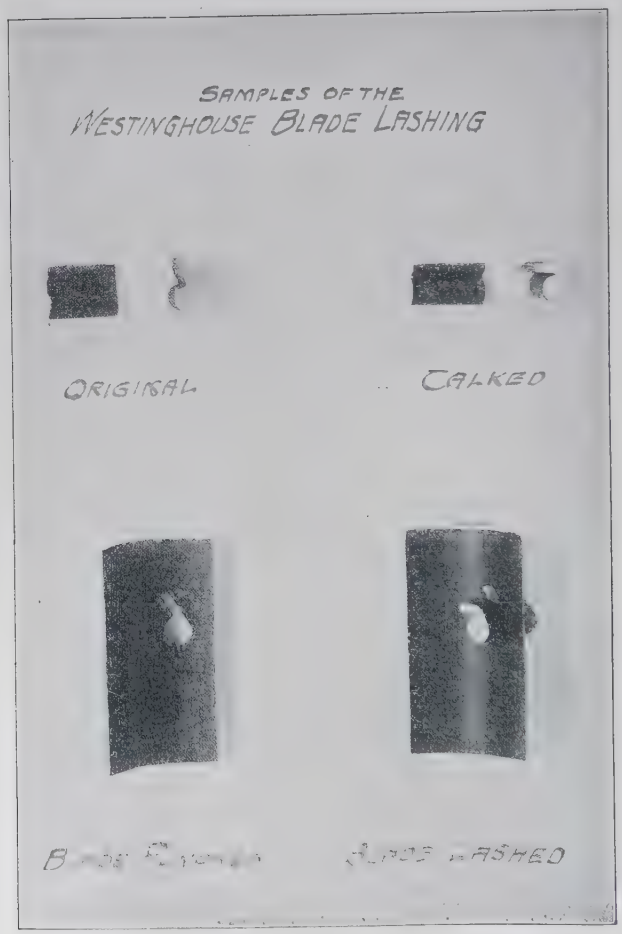

Fig. 96. Method of Lashing Westinghouse Blades.

by Fig. 96. The lashing wire, which is drawn to have a cross-section resembling a comma, binds the blades together firmly enough to give adequate strength for normal service, yet, unlike a very rigid blade construction, it will yield in emergencies without

seriously damaging other parts of the turbine. The blades are lashed in sections three feet long. Because of the peculiar shape of the section of the lashing wire, it can be calked at the end so that a "key" remains in the punched hole to prevent the blade

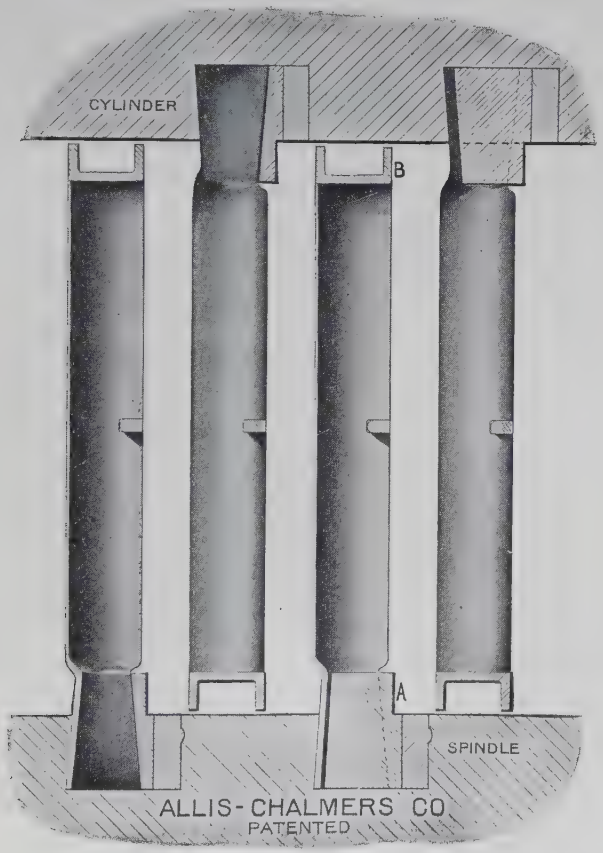

FIG. 97. Sankey's Blading for Parsons Turbines.

from getting out of line. In many respects it is practically as effective as a shroud ring.

A type of blading for Parsons turbines, patented by H. R. Sankey in 1903, has been applied with certain modifications in the Allis-Chalmers and the Willans turbines. A typical illustration of this blading is shown in **Fig. 97.** It is distinguished

principally from the usual Parsons blading by the attachment of a U-shaped shroud ring, **B,** around both the moving and the stationary blades.

The blades are cut to the required length from bars of copper alloy drawn, like wire, to a suitable shape. After the blades are cut from the bar, they are formed in machine tools of special design, so that at the root they have an angular "dovetail" shape as illustrated in the figure, where the blades are shown inserted in a suitable **foundation ring, A.** After this foundation ring is turned to the proper diameter, "dovetail" slots for the blades (see **Fig. 98**) are cut by a special milling machine intended for very accurate spacing and inclination so as to give the required pitch and angle to the blades.

FIG. 98. Spacing for Sankey's Blading.

After the roots of the blades have been inserted in the foundation rings, which, in cross-section, are also of a dovetail shape, the rings are inserted into corresponding grooves in the drums of the rotor and in the inside of the casing where they are held in place by "key pieces." Each of these "key pieces" after being driven into place is upset in an undercut groove which serves as a locking device. The dovetail shapes used in this construction make the attachment of the blades at their roots very secure.

The channel-shaped shroud rings are purposely made thin at the flanges so that in case of contact between the revolving and stationary parts these flanges will be worn off at their edges without tearing out or bending the blades. By this method, as well as with all other types of shroud ring construction, the strength of the blading depends, not on the strength of a single blade, but on the total strength of as many blades as are bound together. In the Allis-Chalmers turbines all the blades in a semi-circum-

ference are joined by a shroud ring. The blading is thus made up in half rings, which are made almost entirely by machinery.

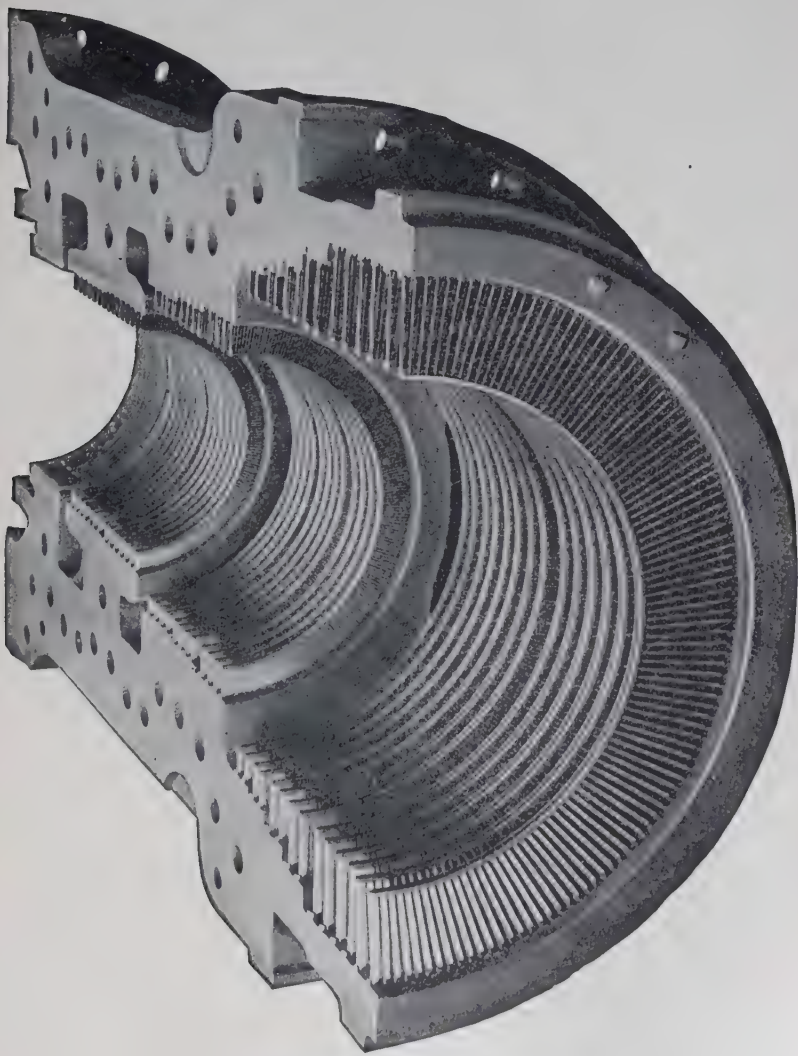

Fig. 99. Interior of an Allis-Chalmers Turbine Casing, Showing Blades Protected by Shroud Rings.

Each ring can be thoroughly inspected before being placed in the turbine and the possible inaccuracies of hand work are likely to

be eliminated. **Fig. 99** shows the interior of the casing of a turbine fitted with shroud rings on the blades.

If small radial clearances are desired, exceptional precautions in designing must be taken to avoid unequal expansions of the parts of the rotor, the casing, and the blades, because shroud rings in reaction turbines are liable to produce disastrous results by "stripping" the blades. Usually in case of accident, however, damaged or worn rings can be removed and the turbine continued in operation until they can be replaced.

Fig. 100. A Westinghouse High Speed Flexible Bearing.

Bearings. In turbines of the Parsons type operating at above 1800 revolutions per minute, a design of **flexible bearing** (**Fig. 100**) is used to reduce the vibrations of the shaft by permitting the rotor, when passing its critical speed, to revolve about its center of gravity instead of its geometric axis. This flexible bearing consists of a nest (usually four) of loosely fitting cylindrical bronze sleeves between which oil films are maintained by capil-

lary attraction.* The clearance between these sleeves is about .004 inch. These films of oil have also a cushioning effect in absorbing vibrations that occur when bringing the turbine up to speed. This flexible bearing accomplishes the same purpose for which De Laval used a flexible shaft. In the figure the outer casing of the bearing is at the right-hand side and the holder for the Babbitt metal lining and the cylindrical sleeves around it are shown at the left.

In larger machines which run at lower speeds, balancing is less difficult and single spherical-seated bearings lined with Babbitt metal are used. Quadrant liners are provided for either type of bearings to accurately adjust the rotor to a central position.

Stages. In this type of turbine low blade speeds are secured by using a larger number of stages. Thus in a 400-kilowatt " single-flow " Parsons turbine there are 58 stages or 116 rows of blades. In such a turbine there are about 30,000 blades. It is important to notice why the pressure difference for each row of blades gradually decreases from the admission to the exhaust in such a turbine. Since there are 58 stages, if the pressure differences were made equal for a total drop in pressure of say from 175 pounds per square inch to 1 pound per square inch, the drop in pressure in each stage would be 3 pounds per square inch. But because the steam velocity for a given difference in pressure is very many times as great at 1 pound as at 175 pounds, such a division is not desirable, and instead the pressure drop is made to suit blade speeds that are likely to show best efficiency in the various sections. Minimum and maximum velocities at the low-pressure end are 500 to 700 feet per second in modern designs of these turbines.

A large Westinghouse-Parsons turbine is shown in Fig. 101, with the upper half of the casing removed to show the rotor,

* Bearing pressure in pounds per square inch times peripheral velocity of the shaft in feet per second is generally about 2500. — Proc. Inst. Elec. Engrs., June, 1905.

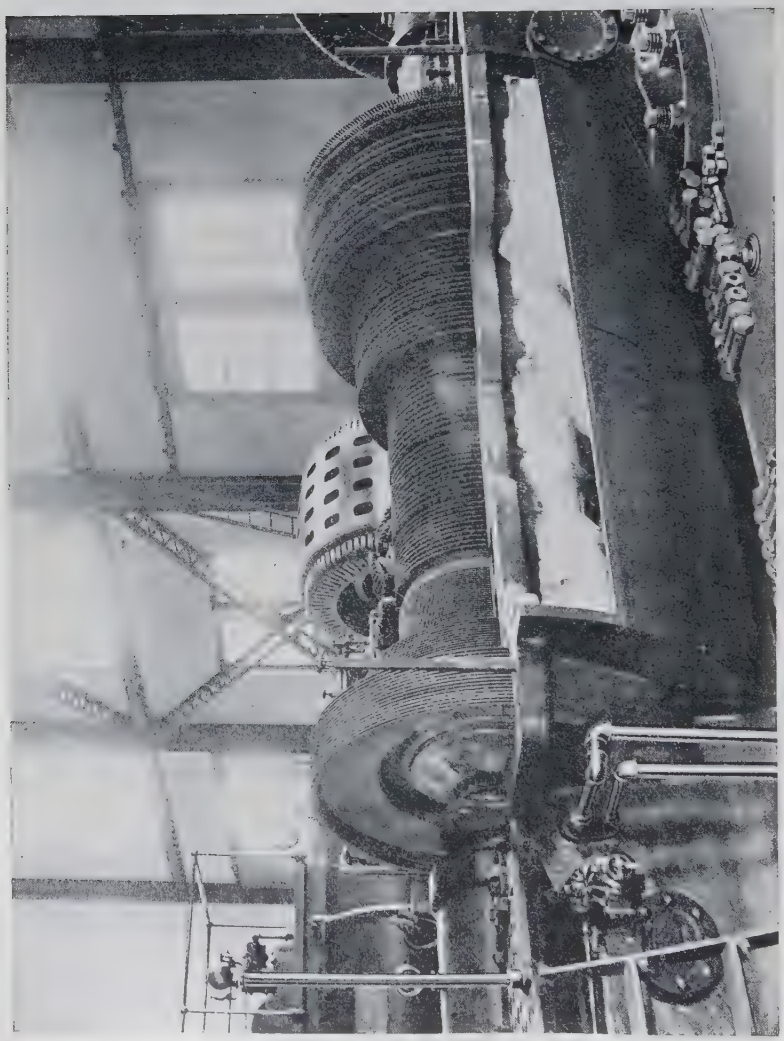

FIG. 101. Parsons Turbine with the Upper Half of the Casing Removed.

blades, and balance pistons. The collars on the balance pistons which form the labyrinth packing are plainly visible. The increasing length of the blades of the third (exhaust) section is also very apparent.

Besides the Westinghouse Machine Company of Pittsburg, Pa., other important manufacturers of Parsons turbines are the following:

Allis-Chalmers Company, Milwaukee, Wis.
C. A. Parsons & Co., Newcastle, England.
Willans-Robinson Company, Rugby, England.
Brown-Boveri & Co., Camden, N. J., Baden, Switzerland, and Mannheim, Germany.*
British Westinghouse Company, Manchester, England.

The Allis-Chalmers steam turbine is a reaction type which differs from the original Parsons machines principally in manufacturing details intended to remove some of the operating difficulties of the older designs. An innovation in the design of these turbines is in the arrangement and construction of the balance pistons. In the older types of reaction turbines the three balance pistons were put at the high-pressure end of the turbine. Sometimes, however, there was difficulty with this construction, as the largest or low-pressure piston in large turbines was of comparatively large diameter, so that an inner web was required in its construction. This web sometimes tended to warp so as to bring the "dummy" or baffle rings of the labyrinth construction on these pistons into contact with those attached to the casing. To overcome this difficulty the **largest balance piston** has been placed at the **low-pressure end** of the rotor behind the last row of blades. In this location its effective area starts from a smaller inner diameter, so that the required area can be obtained with a smaller outer diameter.

Fig. 102 represents diagrammatically an Allis-Chalmers

* A 24,000-horsepower steam turbine has been constructed at the Mannheim works of Brown-Boveri & Co. for the Krupp steel works and blast furnace plant at Rheinhausen. It is probably the largest turbine yet ordered for this kind of service.

The governing and simple overload valve designs of Brown-Boveri & Co.'s turbines are described and discussed on page 333.

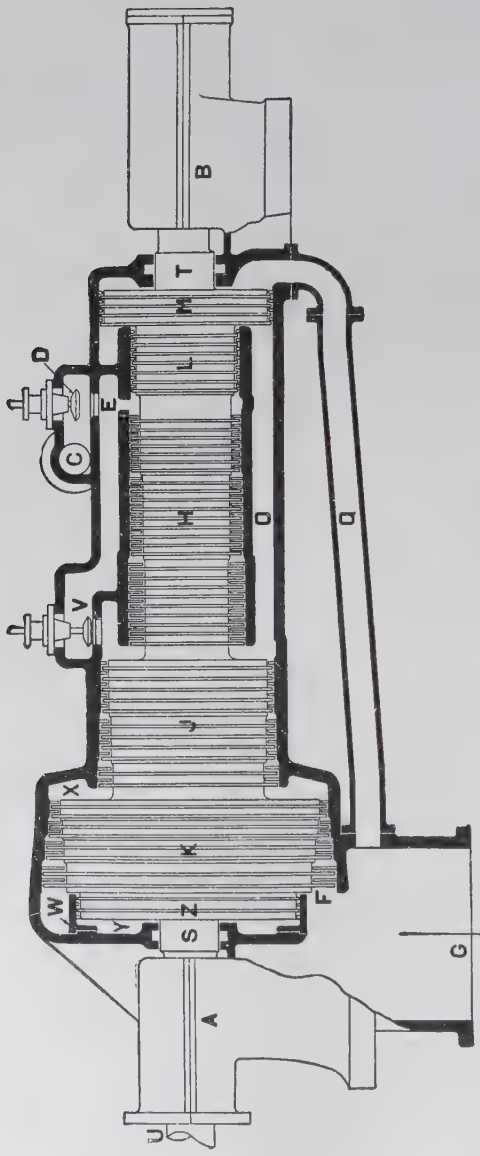

FIG. 102. Allis-Chalmers Modification of Parsons Turbine.

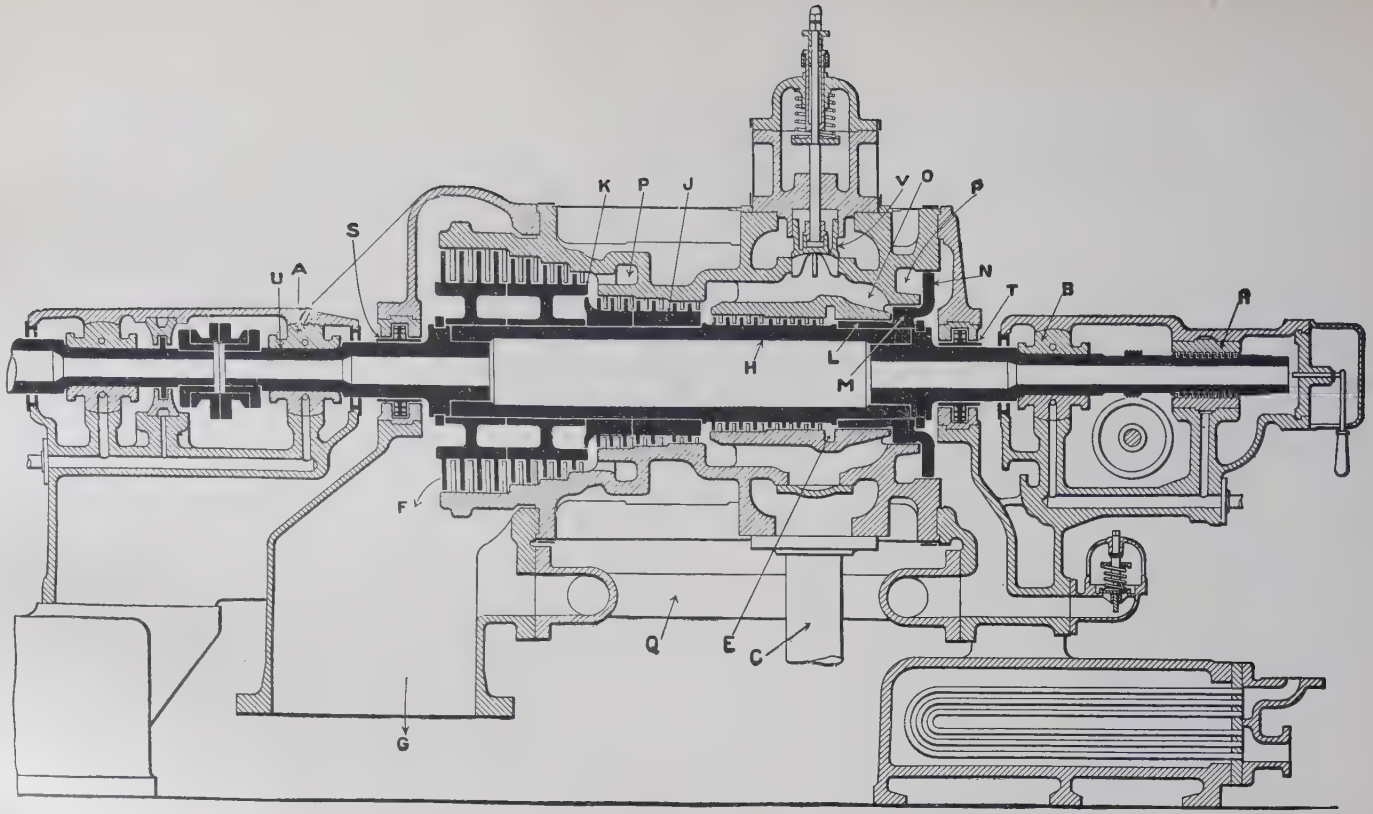

FIG. 103. Sectional View of 5500-Kilowatt Allis-Chalmers Steam Turbine-Generator.

design of Parsons turbine. There are three sections of the rotor — **H, J,** and **K** — and three corresponding balance pistons, **L, M,** and **Z.** The construction of the rotor of one of these turbines is shown in Fig. 209. Steam admission valves are shown as in the usual Parsons designs. The valve **D** admits steam to the high-pressure end of the turbine and is always under the direct control of the governor. The second valve, **V,** called the **overload valve,** is opened only when the turbine must be operated at overload or non-condensing when the condenser equipment is out of service (see page 335). At **C** the main steam pipe enters the steam-chest and the exhaust is at **G.** Main bearings are at **A** and **B.**

A 5500-kilowatt Allis-Chalmers turbine-generator is illustrated in **Fig. 103.** Note that balance pistons are not used.

Governors and Low-Pressure Turbines. Methods for governing Parsons turbines and designs of low-pressure steam turbines of the Parsons type are discussed in Chapters VIII and IX.

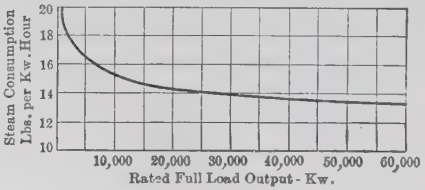

FIG. 104. Approximate Steam Consumption of Any Size of Large Steam Turbine (Intended Particularly for Parsons Types).

Economy Curves. Fig. 104 shows fair average values of the steam consumption of good designs of Parsons turbines for 165 pounds per square inch absolute steam pressure, 28 inches vacuum, and 0° F. superheat. This curve shows why it has been found economical to replace 5000 kilowatt turbines by those of 30,000 to 60,000 kilowatts rating. Typical tests and curves of Westinghouse-Parsons turbines are given on pages 395 and 398.

The curves in **Fig. 105** are absed upon the results of tests of a Westinghouse-Parsons steam turbine of standard construction.

It is stated by the manufacturers that the performance as shown by these curves is typical of machines of this type.

The diagonal lines or "Willans lines" in the figure show the total water weighed or steam condensed per hour at various loads. The curves or "water rate curves" show the variation in water, or more correctly, in steam consumption per horsepower-hour at

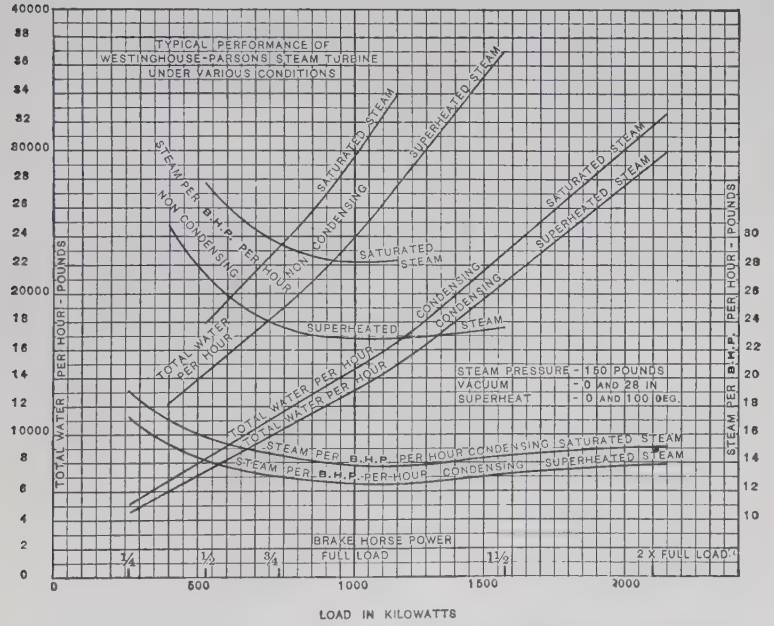

FIG. 105. Typical Economy Curves of a 1000-Kilowatt Westinghouse-Parsons Steam Turbine.

various loads, that is, the "water or steam rate" of the turbine. Each "water rate curve" corresponds to a "Willans line" — the upper curve to the upper line, the lower curve to the lower line, etc.

Operating conditions of these tests are:

(1) Condensing — saturated and superheated steam (100° F.)

(2) Non-condensing — saturated and superheated steam (100° F.).

(3) One-quarter rated load to 100 per cent. overload.

In the two overload tests the operation of the automatic secondary or overload valve may be observed. As before noted, it comes into action at a definite predetermined load as indicated by a bend in the water line. With the aid of this valve the best economy of the turbine is secured throughout the range of normal loading, while large overload capacity is available when desired, although at slightly decreased efficiency. When the secondary valve, however, has come fairly into action, the efficiency undergoes gradual improvement, as shown by the reversal of curvature of the curves of steam consumption.

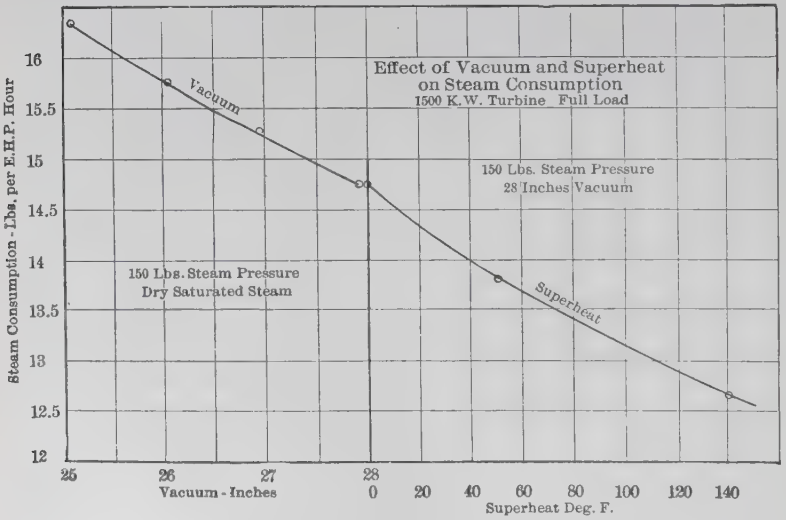

FIG. 106. Curves of Steam Consumption of a 1500-Kilowatt Westinghouse Turbine with Varying Vacuum and Superheat.

A turbine designed for condensing work will not operate non-condensing with quite as good economy as if designed to exhaust against atmospheric pressure. That this economy is, however, excellent is shown by the upper pair of curves. The water rate is somewhat less than double the condensing water rate.

Fig. 106 illustrates graphically the effect of vacuum and superheat on the steam consumption of a 1500-kilowatt Westinghouse turbine. The percentage change in the steam consumption is said to be about the same for all sizes.

THE WESTINGHOUSE "IMPULSE AND REACTION" DOUBLE-FLOW TURBINES.

The double-flow principle has been adopted recently for the design of large sizes of Westinghouse turbines largely for mechanical reasons — primarily to avoid the end thrust which is an important factor in all reaction types. In small machines, however, the double-flow principle does not have the same advantages as in the large machines. It is very obvious that the economy of two small machines is not nearly as good as one of twice the capacity. With large machines, however, the change in economy is not nearly so great when the capacity is doubled. This fact is well illustrated by the curve in Fig. 104. Test results as shown for large sizes are of the combined "impulse and reaction" type.

Fig. 107 illustrates a Westinghouse **double-flow turbine with an impulse element.** In its essential parts this turbine consists of a set of **nozzles,** an **impulse wheel with two velocity stages, one intermediate section,** and **two low-pressure sections of Parsons blading.** Steam enters the turbine through an opening in the lower half of the casing,* from which it is piped directly to the nozzle block shown at the top of the figure. Steam escapes from these nozzles † at a high velocity to impinge on the impulse blades. The casing around the impulse wheel is made of sufficient size to permit a good distribution of the steam, so that it will enter the intermediate Parsons section evenly around the entire circumference of the rotor. After the steam has passed through the intermediate section it divides along two separate paths. One-half enters the left-hand section of the low-pressure Parsons blading and the other half passes through the interior of

* Advantage of steam entering the lower half of the casing is that the top can be removed without disturbing the piping supplying the turbine.

† These nozzles are made non-expanding. Some experimental data seem to show that non-expanding nozzles give higher efficiencies than expanding nozzles with steam at less than about 70 pounds gauge pressure. The designers of these turbines have recognized that there are nozzle losses due to under-expansion in a diverging or expanding nozzle when the steam is throttled at light loads.

the rotor shell which forms the connecting passage to the right-hand low-pressure section. Arrows indicate in the figure the passage of the steam through the shell. When the steam is discharged from the last rows of low-pressure blades, it passes into

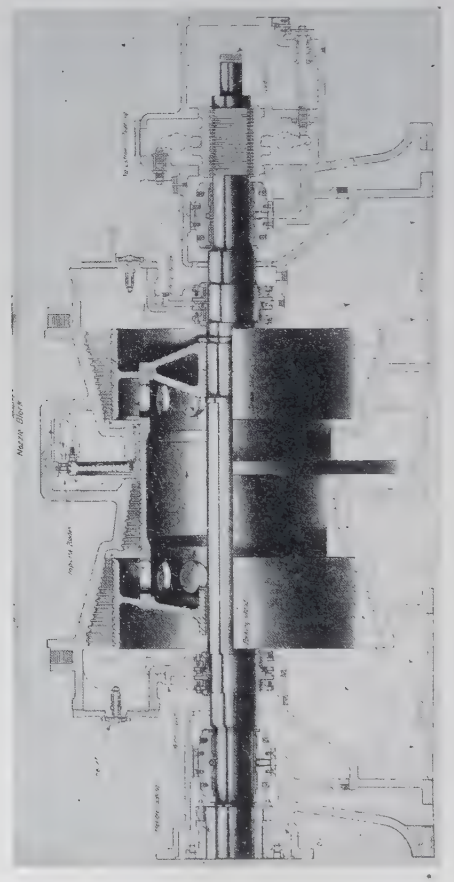

Fig. 107. Section of Westinghouse Double Flow Turbine.

the exhaust pipes — of which there is one at each end — and then to the condenser.

As there is practically **no expansion in the impulse blades,** these blade areas are made to increase only in proportion to the reduction in steam velocity in each row of moving blades.

As the same pressure exists on both sides of the impulse wheel disk, this is not subjected to any end thrust, and requires no balancing. The small thrust due to the difference of pressure between the inlet and outlet of the Parsons intermediate section is accurately equilibrated by a **"dummy" or balance piston,** of moderate dimensions, located between the impulse wheel and the right-hand low-pressure section. The thrusts in the low-pressure sections are in opposite directions, and are therefore balanced. With these arrangements it is possible for the entire turbine to run in perfect equilibrium under all conditions of vacuum, pressure, and load. It is, of course, necessary to provide means for accurately fixing the axial position of the rotor, and for this purpose an **adjustment bearing**, shown at the right-hand end of the shaft in Fig. 107, is provided. It consists of a number of collars turned in the steel shaft, into which fit corresponding brass rings fixed in the adjustment blocks. The upper and lower halves of the adjustment bearing may be moved by means of micrometer screws, thus permitting the axial position of the rotor to be accurately known at all times.

All double-flow cylinders are made in two parts, the upper and lower halves each being a one-piece casting. The design is symmetrical throughout, devoid of longitudinal flanges except those at the center required for bolting the two parts together. The castings are first rough-bored, after the flanges have been planed and drilled, and are then "seasoned" with high-pressure steam for a number of hours to remove any local casting stresses in the metal. They are then given the finishing cut and assembled with the boring bar running in the bearing housing so as to insure a concentric bore. Manholes are provided at each end of the cylinder to permit access for interior examination, and auxiliary **relief valves** are fitted in each of the manhole covers to prevent the pressure in the exhaust passages from rising to a dangerous point in case of failure of the condensing apparatus or the sticking of the atmospheric relief valve in the exhaust piping as otherwise dangerous pressure would result in the casing.

A Y-connection, fitted with two corrugated copper expansion

joints located below the turbine, connects the separate exhausts to the main exhaust pipe. These expansion joints provide for the expansion and contraction of the turbine casing.

The rotating element of the turbine is built up of five cast-steel parts, in addition to the shaft. As may be seen in **Fig. 107,** these are the three Parsons blading supports, the impulse section and a dished plate. It is stated that the shaft carries its load

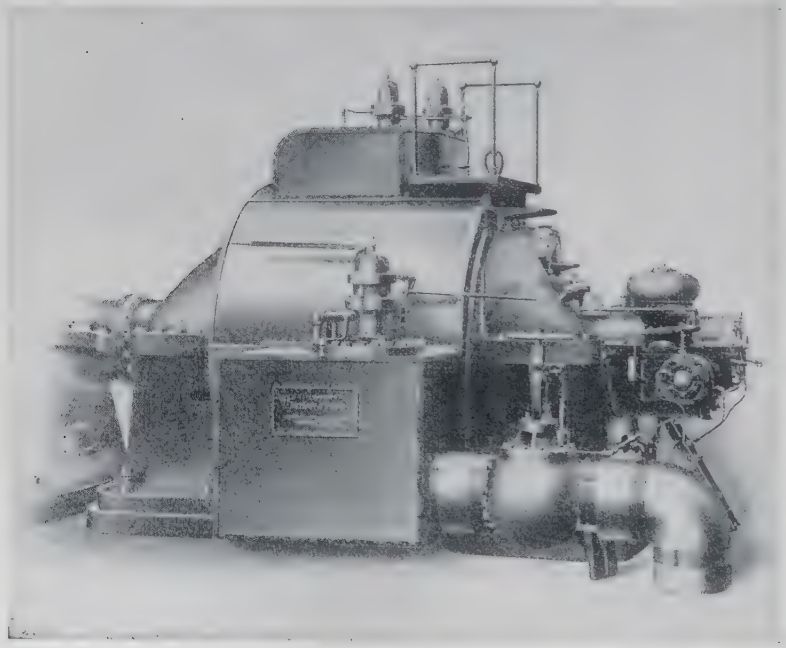

Fig. 108. 7500-Kilowatt Westinghouse Turbine.

(the weight of the rotor on the end supports) at one-third the distance from the points of support, so that this design allows a lighter shaft than would be required for distributed loading, and the consideration of deflection is practically eliminated. This built-up part of the rotor is rigidly attached to the shaft only at the right-hand support, and the opposite end is fitted with a bronze bushing surrounding the shaft, so as to permit the rotor

to move axially, without appreciable resistance, under any differential expansion of shaft and rotor.* The impulse section consists of a flanged cast-steel disk forced on the body carrying the intermediate Parsons blading. The flange of this disk is grooved at the base and forms the **dummy piston** for balancing the thrust of the intermediate Parsons section. **Fig. 108** is a half-tone illustration of a 7500-kilowatt Westinghouse double-flow turbine.

The rotor of a 6000-kilowatt double-flow turbine is shown in **Fig. 109.** Details of the arrangement of **nozzles and blades** are

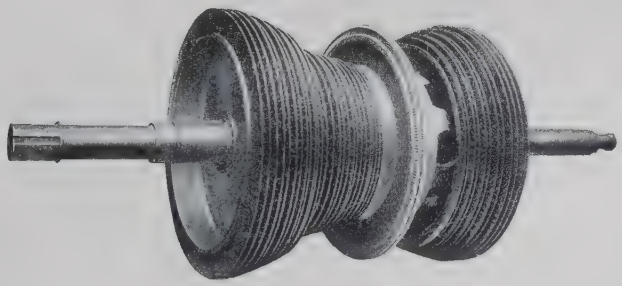

FIG. 109. Rotor of a Westinghouse Double-Flow Turbine.

shown in **Fig. 110.** It is seen that the **nozzle block** is a casting quite separate from the turbine casing. As it receives steam from the governor valve, high temperature steam is restricted to a comparatively small casting which is made free to expand and contract with changes of temperature.

A new type of shaft coupling for Westinghouse turbines is illustrated in **Fig. 111.**

Westinghouse Emergency Speed Limit. A very interesting mechanism is provided with Westinghouse turbines for shutting off the steam supply in case the governor fails to act and a dangerous speed might be attained. Details of this mechanism are shown in **Figs. 112a** and **112b.** In its essential elements it

* This is an ingenious design but a more recent construction of Westinghouse rotors is shown in Fig. 112g, where the end sections of the rotor are cast integral with the sections of the shaft, as required at each end.

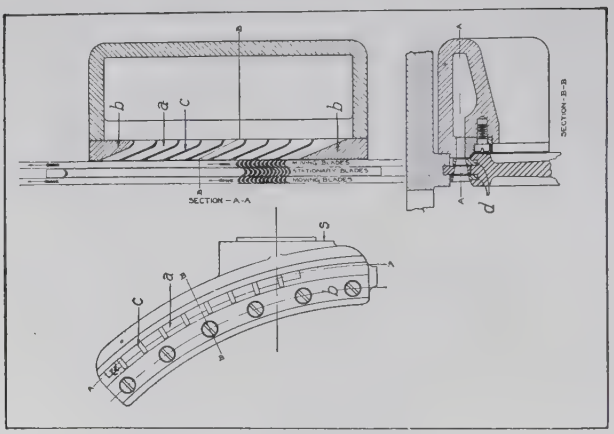

FIG. 110. Westinghouse Nozzle Block, Showing Arrangement of Nozzles and Blades.

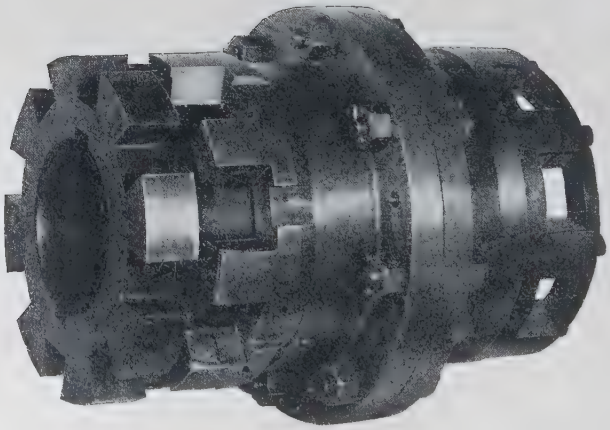

FIG. 111. Westinghouse Shaft Coupling.

consists of a "**weight pin**" **P,** placed diametrically at right angles to the axis of the shaft, in a cylindrical "body" screwed on the main turbine shaft at the high-pressure end. Centrifugal force tends to drive this pin away from the center and through the loosely fitting collar **N.** This force is resisted, however, by the "**weight spring**" shown around the pin in the figures. The strength of this spring can be adjusted by means of the

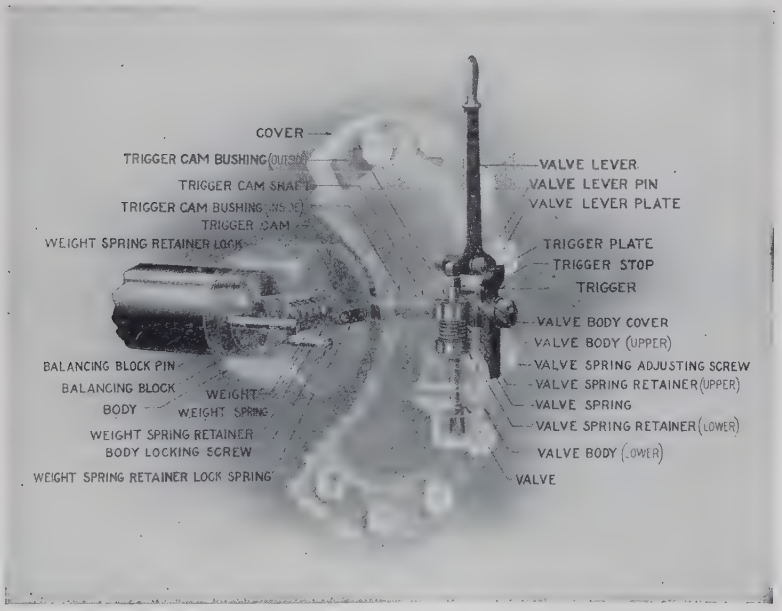

FIG. 112a. Phantom View of Westinghouse Emergency Speed Limit.

collar **N,** which is provided with a screw thread. Such adjustment determines the speed at which the centrifugal force overcomes the spring and forces the pin outward to engage with a **trigger cam L.** This cam is rigidly attached to one end of a short shaft **S,** which carries at its other end a trigger **H.** A small plate at the bottom of the **valve lever C** is supported normally at one end on the trigger **H** and at the other end on a screw provided for adjusting the spring on the **auxiliary steam valve E.**

If the speed of the turbine should become higher than the limit for which the "weight spring" is set, the pin **P** is forced out to engage with the cam **L**, which in turn moves the trigger **H** away from the valve lever plate which it supports. In this way the valve **E** is opened because the tension in the spring on its spindle

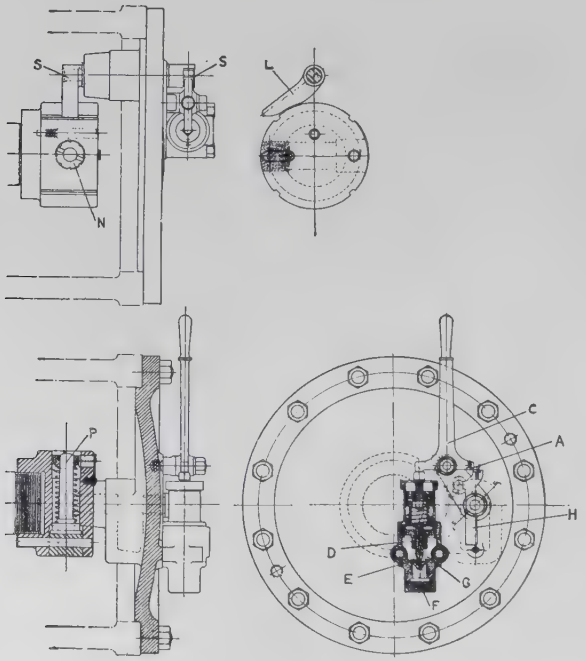

Fig. 112b. Drawings of Westinghouse Emergency Speed Limit.

is released. There is always high-pressure steam on the upper side of the valve **E**, and when it is removed from its seat this steam rushes through a pipe connecting the lower side of the valve to a small steam cylinder at the side of the main steam pipe. A short rod attached to a piston in this cylinder is moved by the steam pressure to strike a trigger which releases and closes the emergency valve on the main steam pipe.

Advantages of the Westinghouse Double-flow Type. In large capacities the following advantages are claimed for the double-flow type over the usual Parsons designs:

(1) Reduction in size and weight **due to higher permissible speed.**
(2) Almost negligible end thrust.
(3) Blades and casing are not exposed to steam at high temperatures.
(4) Large volume per pound of steam at the admission to the first Parsons section avoids the use of very short blades.
(5) Only one balance piston is required and this is of relatively small diameter.
(6) Exhaust connections are considerably reduced in size, due to divided flow.
(7) The impulse element is well suited to high pressure and superheat, and by this modification the shaft length is reduced nearly 50 per cent.

An exact reproduction of a section drawing of a Westinghouse **double-flow low-pressure turbine** rated at 1000 kilowatts is shown in Fig. 184 in Chapter IX.

The following figures **112c, d, e,** and **f** show designs used by the Westinghouse Machine Company for 25,000-kilowatt turbine-generators to operate at 200 pounds per square inch absolute steam pressure, 29 inches vacuum and 200° F. of superheat. **Fig. 112c** shows the double-flow turbine designed for these conditions and operating at 1500 r.p.m. **Fig. 112d** shows a similar design operating at 750 r.p.m. A tandem compound arrangement operating at 750 r.p.m. is shown in **Fig. 112e.** In this last design it will be observed that the high-pressure portion is of the ordinary single-flow arrangement while the low-pressure end is made double-flow. The combined unit is connected to a single 25,000-kilowatt generator. A cross-compound turbine arrangement, **Fig. 112f,** with the high-pressure portion operating at 1500 r.p.m. and connected to a 12,500-kilowatt generator is shown here together with a low-pressure portion which is of the double-flow arrangement and operating at 750 r.p.m. The low-

pressure portion is also connected to a 12,500-kilowatt generator. These figures show the comparison to scale of the arrangements described above.

All of these designs would give very excellent economy, and the choice of the unit would depend primarily on the two factors of first cost and economy, assuming that in each case the reliability for continuous operations is the same.

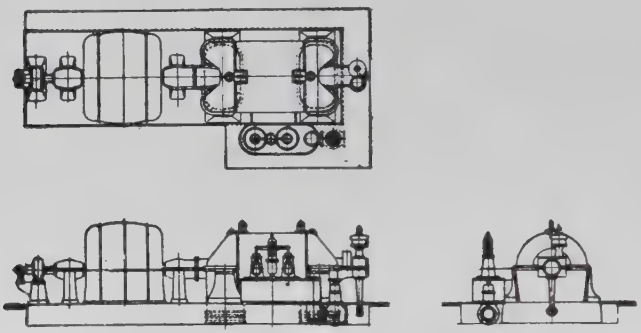

FIG. 112c. Double-flow Reaction Turbine Designed for 1500 r.p.m.

A close study of the four arrangements indicates that the double-flow turbine at 1500 r.p.m., direct connected to a single generator (**Fig. 112g**), is the cheapest construction. The large

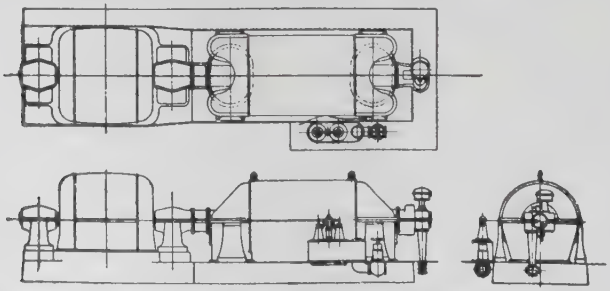

FIG. 112d. Double-flow Reaction Turbine Designed for 750 r.p.m.

areas required in the low-pressure stages of this turbine make high velocity and long length of blades essential, with the necessity of careful designing to properly take care of the stresses due to centrifugal force in the low-pressure end.

The most economical combination of the four is the cross-compound reaction turbine with the high-pressure portion running at 1500 revolutions and the low-pressure portion at 750

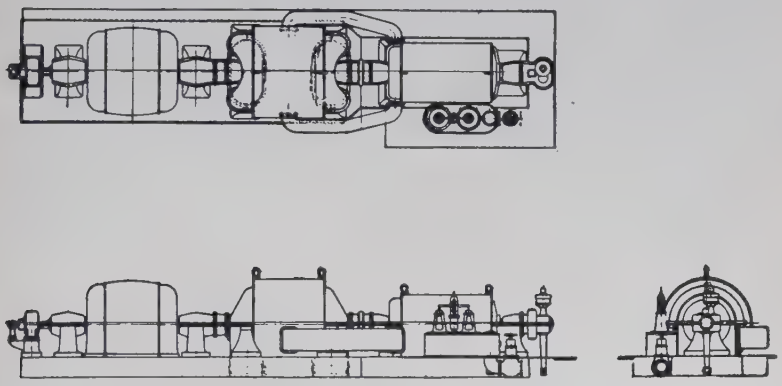

FIG. 112e. "Tandem-compound" Reaction Steam Turbine.

revolutions. With this arrangement the highest efficiency is obtained, because the method of combining the unit into high- and low-pressure cylinders, running at 1500 and 750 r.p.m.,

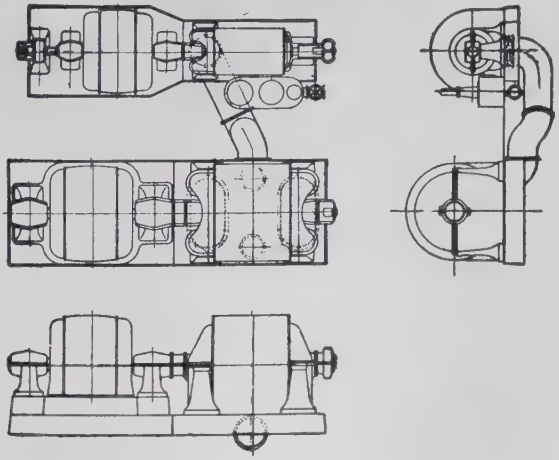

FIG. 112f. "Cross-compound" Reaction Steam Turbine.

gives the condition for best blading proportions throughout the turbine without departing from established standards of prac-

tice. The construction, however, is considerably heavier than the single unit of the double-flow type (**Fig. 112g**) and is more costly to construct and install. At powers and speeds attainable with single alternating-current units of, say, below 15,000 kilowatts' capacity, the double-flow turbine will be nearly, if not equal, to the cross-compound "straight reaction" turbine under the same operating conditions, and any difference in efficiency would probably be offset by the lower first cost of the double-flow machine. Taking into consideration both first cost and efficiency, between 10,000 and 40,000 kilowatts' capacity, the double-flow machine is undoubtedly the proper type of construction.

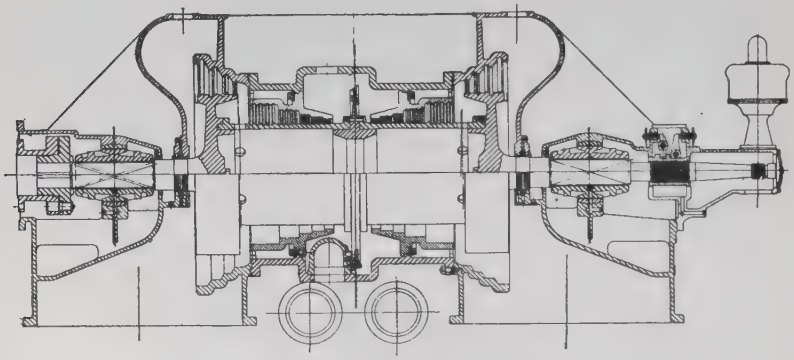

FIG. 112g. Section of Combined Impulse and Double-flow Reaction Turbine.

The demand for turbine-generators is greatest between 4000 to 15,000 kilowatts maximum rated capacity, within which range the double-flow machines of the combined impulse and reaction types of blading satisfactorily meet commercial conditions both with respect to cost and efficiency. There is, however, practically the same to be said regarding turbines of the Curtis type having six to twelve pressure stages.

Below 4000 kilowatts' capacity the turbines consisting of an impulse wheel followed by single-flow reaction blading, and a "straight" single-flow reaction turbine (**Fig. 102,** page 234, and **Fig. 112i**), represent the machines best suited for average operating conditions. In most cases the former would be pre-

ferred; but when the speed is to be made particularly low the preference goes to the latter.

Thus with a speed of 3600 r.p.m. driving a 60-cycle generator at, say, 500 kilowatts, the best design would be a combined impulse and reaction machine for best efficiency and lowest cost. If, however, the generator to be driven was for 25-cycle service, with an allowable maximum speed of 1500 r.p.m. and the same capacity the single-flow reaction turbine would be selected, providing reaction blading was to be used at all.

In general, however, the application of the combined impulse and reaction turbine, consisting of an impulse element for the high-pressure portion and reaction blading for the low-pressure portion, is well adapted for complete expansion turbines over wide ranges of power and speed; and since the introduction of

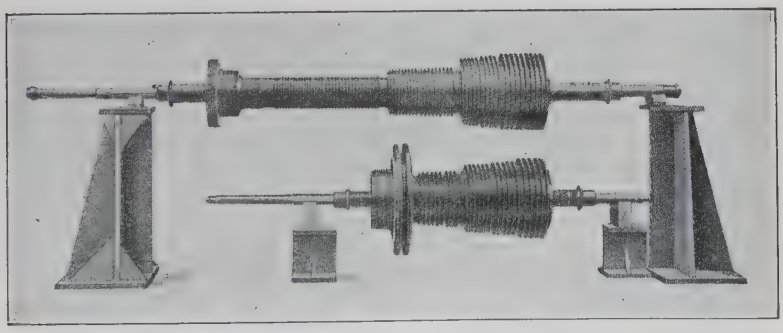

FIG. 112h. Relative Lengths of Rotors in Two Common Types.

this type, a large proportion of the firms building steam turbines have utilized this construction, either with Parsons or Rateau blading following the Curtis impulse element in the high-pressure end. The principal advantage of this type of construction is the shortening of the machine without very much loss in efficiency, the elimination of balancing pistons with the avoidance of the very considerable leakage of steam through them, and the securing of high economies at light loads by the application of the method of governing by "cutting out nozzles" (see page 305), now applied to Westinghouse turbines of the combined impulse and reaction type.

Fig. 112h shows the relative lengths of the rotors of the latest design of Westinghouse turbine with combined impulse blading and single-flow reaction blading compared with the conventional single-flow Parsons type with "balance pistons" (see page 222). Nearly 50 per cent. in length is saved, making the difficulties due to springing and expansion of the casing and rotor relatively small.

Another important consideration in choosing between the "straight" single-flow reaction and the combined impulse and reaction types is that the former is generally preferred for

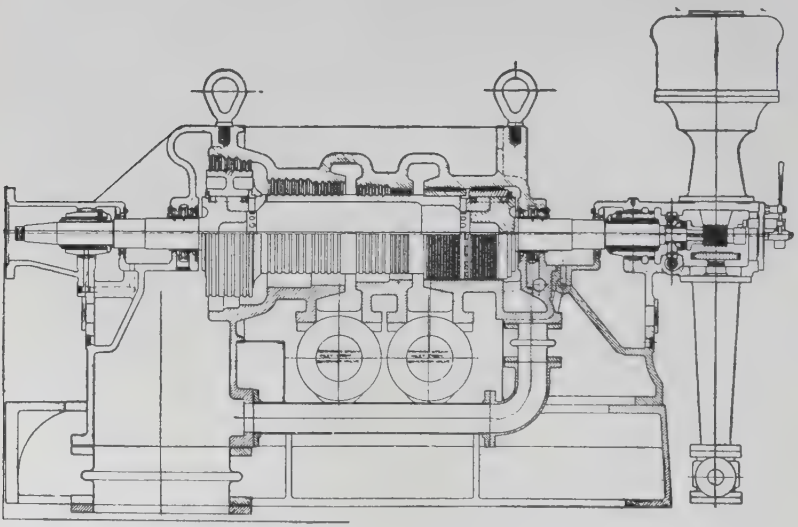

Fig. 112i. Single-flow Reaction Turbine with Kingsbury's Thrust Bearing.

moderate superheats and pressures, while the latter is selected when the superheats and pressures are high.

Another important improvement in the construction of reaction turbines is shown in **Fig. 112i** where the Kingsbury type of thrust bearing is applied. By this means the usual "balance pistons" required for the single-flow type are eliminated.

A recent design of a 20,000-kilowatt "tandem" type of reaction turbine is shown in **Fig. 112j**. At the right-hand side is the

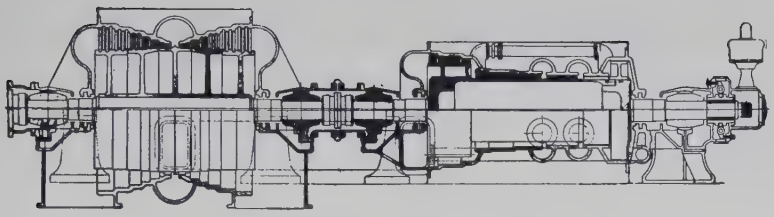

FIG. 112j. Tandem Reaction Turbine.

high-pressure turbine and at the left the low-pressure. This figure shows more clearly the type shown also in **Fig. 112e.** There are very few applications as yet for "land" service of this arrangement, although it is common for marine service.

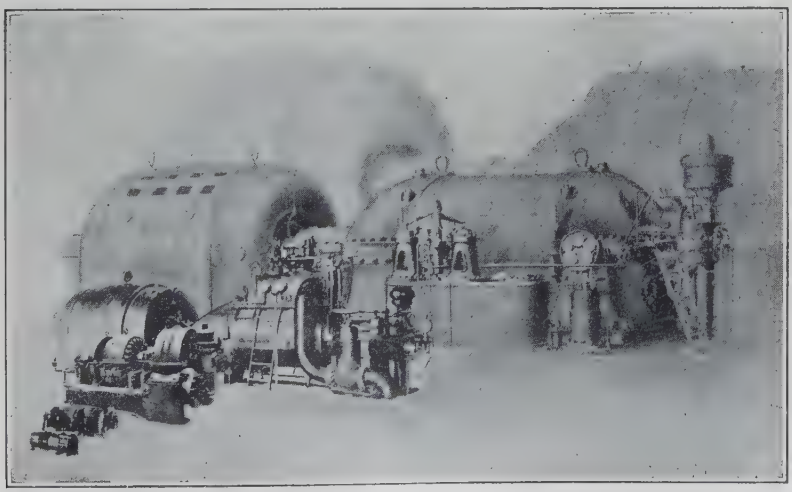

FIG. 112k. Relative Sizes of Steam Turbine-generators, from One Kilowatt to 35,000 Kilowatts.

Fig. 112k illustrates the relative sizes of steam turbine-generators for capacities from one kilowatt for the smallest to 35,000 kilowatts for the largest. The turbine is shown on the right-hand side and the generator on the left.

Multiple Exhaust Systems. Owing to the difficulties of obtaining sufficiently large areas in the blading of steam turbines for efficient and complete expansion, the device shown in **Fig. 112l** has been used in some designs of large steam turbines. By the method invented by Baumann, shown in this figure, the

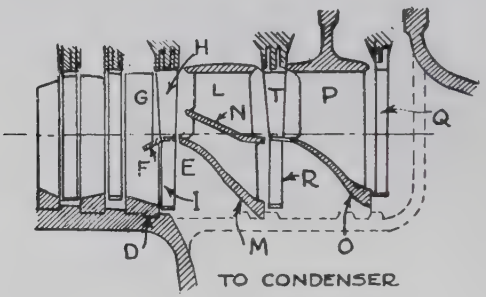

FIG. 112l. Baumann Blading.

effect of multiple-exhaust passages is obtained by means of an unusual design of short diaphragms located near the exhaust end of the steam turbine. The figure shows the under side of the low-pressure portion of the reaction blading of a large steam turbine. The shaft of the rotor is not shown but is above the blades represented in the figure. The steam from the high-pressure stages of the turbine enters from the left-hand side and passes through the reaction blades of which those at the low-pressure end are arranged to rotate between the passages made by the special diaphragms shown in the middle of the figure. After discharging through the last low-pressure blades, the steam passes downward into the condenser.

The special construction shown in **Fig. 112l,** begins on the right-hand side of the dividing ring passing all the way around the circumference of the casing as marked at **E**. That part of the steam passing through the outer annular space **F** expands in the moving blades **I** and then discharges downward into the condenser. The other part of the steam which enters above the annular dividing ring **E** expands somewhat in the portion of the

blade **I** which is marked **H**; the blading at this point being made so as to cause the least possible loss of pressure.

A diaphragm **N** serves to divide again a portion of steam which discharges from the moving blade at **H**. A part of this steam passes through the outer annular space **K**, expanding and doing work on the moving low-pressure blades at **R** and then entering the condenser. The inner portion of the steam from the blade

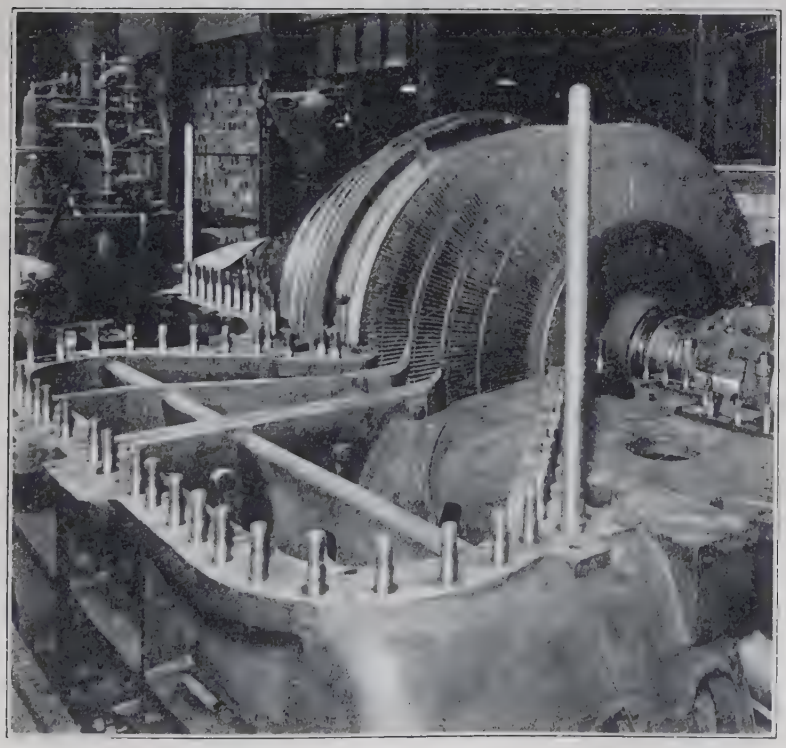

FIG. 112m. Interior of Casing Showing Diaphragms of Baumann Blading.

passage **H** passes first through the guide passage marked **L**, into the portion **T** of the low-pressure blade and then through the guide passage **P**, into the moving plate **Q**, where it does further work before discharging into the condenser.

This type of construction of the exhaust end of a steam turbine serves to divide the low-pressure steam into three parts expanding each part separately down to the condenser pressure, thus obtaining much greater expansion than would otherwise be possible with the lengths of blades which are ordinarily used. Briefly, the object of this construction is to avoid the restriction of steam flow which is usually found in blading of the low-pressure ends of a steam turbine. **Figs. 112m and 112n** show large turbines with this type of exhaust passages as constructed by the Westinghouse

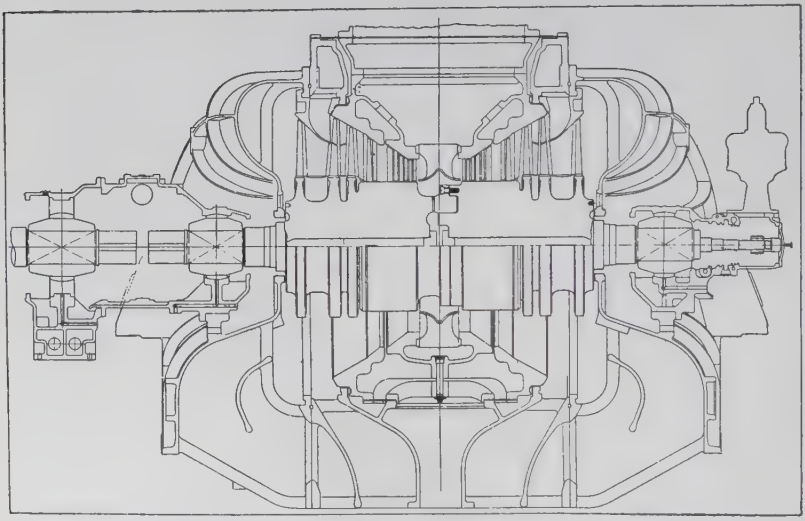

FIG. 112n. Low-pressure Cylinder of Westinghouse 165,000-kilowatt Turbine.

Electric and Manufacturing Company. The latter figure shows the low-pressure cylinder of the turbine designed by this company for the United Electric Light and Power Company of New York. The completed turbine-generator has a rated capacity of 165,000 kilowatts.

This multiple-exhaust arrangement was introduced in America in 1923 and for several years was used on practically all the large steam turbines made by the Westinghouse Company. Since 1926, however, better blade materials and greatly improved

blade fastenings have been developed so that it is now possible to use much longer blades than formerly. With these longer blades which provide a correspondingly increased area for the discharge of the exhaust steam, it is now possible to obtain approximately the same performance with a single-exhaust construction as with any of the methods of applying multiple-exhaust arrangements, all of which add, of course, to the costs of construction.

Another method of arranging a multiple-exhaust section of a steam turbine is illustrated in **Fig. 112 o,** showing a sectional

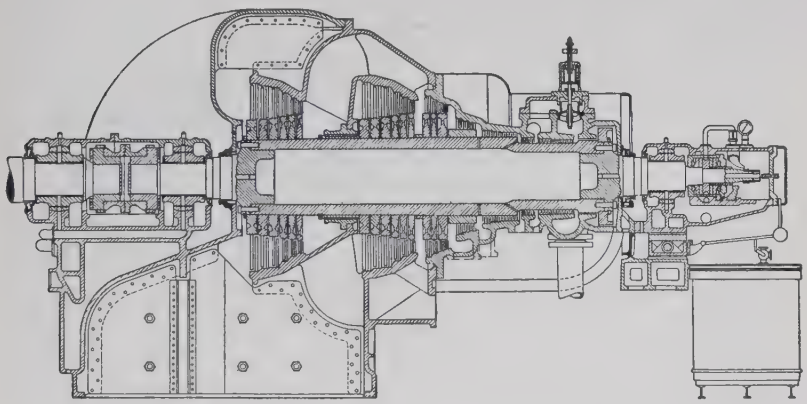

Fig. 112 o. Allis-Chalmers Double-flow Turbine with Uni-directional Steam Flow.

drawing of an Allis-Chalmers turbine rated at 30,000 kilowatts. It has a single casing and rotor, and has a *double-flow uni-directional discharge* of the steam into the exhaust connection. It is designed for steam at a gage pressure of 550 pounds per square inch and a steam temperature of 700° F. There is reheating after expansion to a gage pressure of 120 pounds per square inch by which the steam temperature is raised at this pressure again to 700° F. The expansion is then completed to a vacuum of 29 inches of mercury.

THE CURTIS TURBINE

The Curtis steam turbine, of which the original patents were issued to C. G. Curtis about 1895, is manufactured by the General Electric Company at Schenectady, N.Y., and Lynn, Mass., the British Thomson-Houston Company at Rugby, England, and the Allgemeine Elektrizitäts Gesellschaft at Berlin, Germany.

As in the De Laval turbine, **the steam is expanded in nozzles** before reaching the moving blades, but the complete expansion from the boiler to the exhaust pressure occurs in this type usually in a series of stages or steps, as the steam passes through a succession of chambers, separated from each other by **diaphragms.** The diaphragms and blade wheels of a four-stage Curtis turbine are shown by a section drawing in **Fig. 113.** Each chamber or **stage** contains usually one disk or blade * wheel. Steam at the admission pressure enters the first set of nozzles through the port **A,** where it expands to the pressure in the first stage and delivers a portion of its energy to the blades in the wheel **F.** The steam then expands again through a second set of nozzles in the diaphragm **C** leading to a still lower pressure in the second stage, where it gives up a portion of the energy remaining to a second set of blades, and so on. In the very small units but one pressure stage is usually employed, but in the larger sizes from two to five are used. The general arrangement of the nozzles and blades in a single-stage Curtis turbine was shown diagrammatically in Fig. 39. It is typical of these turbines that there are always three or more rows of blades following each set of nozzles, **and at least one row is stationary.** These stationary blades are technically called **intermediates.** There is practically no expansion in the stationary blades; the object of the several rows of blades is only to reduce the velocity, and **for a given blade speed**

* The terms **vane, blade,** and **bucket** are often used interchangeably. Common practice, however, seems to apply blade to the Parsons turbine, and bucket to the Curtis, De Laval, and those of the Pelton type. In order, however, that the notation may not be confused, the term **blade** will be used in connection with Curtis as well as other types.

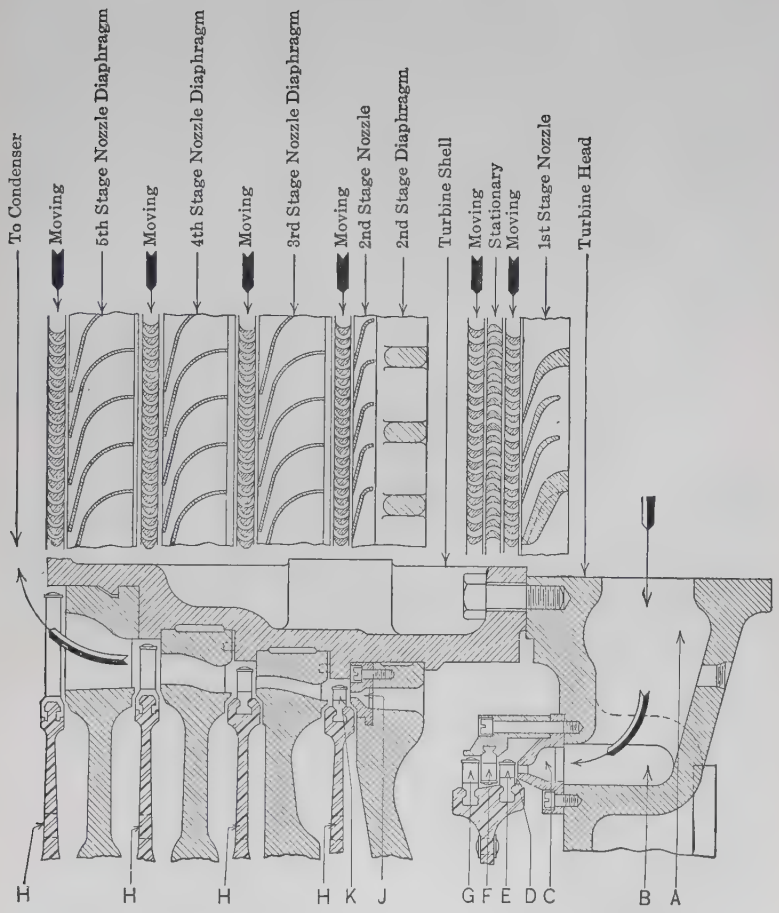

FIG. 113. Section of a Five-stage Curtis Turbine Showing Arrangement of Diaphragms and Blade Wheels.

the steam velocity is reduced per pressure stage in proportion to the number of rows of moving blades. Each pressure stage is said then to have as many **velocity stages** as there are rows of moving blades. It must be noted, however, that, unlike the case of the Parsons turbine, the steam expands only in the nozzles, and the pressure is practically the same on both sides of any row of blades.

Nozzles. The nozzles are *generally* rectangular in cross-section, with "rounded corners." They are grouped closely together, being cast either integral with the diaphragms or in separate plates (**Fig. 114**), which in assembling are bolted to the diaphragms. The number of nozzles is proportioned to the

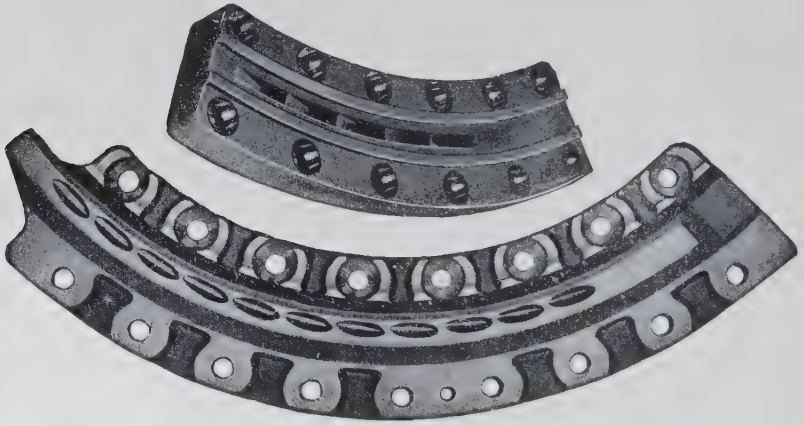

Fig. 114. Nozzle Plates of Curtis Turbines.

power required and the degree of expansion used; in some cases, at least in the low-pressure stages, they extend completely around the diaphragm, making a continuous band of steam around the circumference. This method has the advantage of reducing blade rotation losses to a minimum, as explained in Chapter V. Steel, bronze alloys, and cast iron are employed for making the nozzles of Curtis turbines.

Wheel Disks and Blades. The blade wheels are usually made of forged steel disks similar to Fig. 216, which increase in thick-

ness as they approach the hub, but in larger sizes the construction shown in Fig. 113 is often employed. In some very small turbines the blades are cut in the solid rim by special machines, while others have drawn or rolled blades which are cast into **segments** (**Fig. 115**) of bronze alloy designed to be riveted to the rim. A dovetailing method similar to Fig. 63 is now generally preferred to the method of inserting the blades by casting. The fixed blades, or **intermediates,** are also either cut or cast in segments (**Fig. 116**), and are fastened by bolts to the interior of the casing as shown in Fig. 57. These intermediates cover only the portion of the circumference upon which the belt of steam delivered by the nozzles can impinge. To make the blades more rigid, thin bands or shroud rings are riveted in segments to projections on their ends.

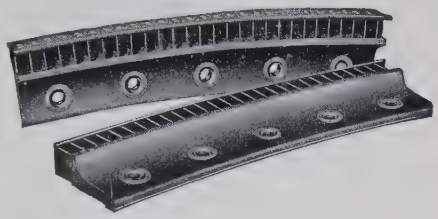

FIG. 115. Curtis Moving Blade Segments.

FIG. 116. Curtis Intermediate Blade Segments.

The wheels of a four-stage Curtis turbine are shown in **Fig. 117.** There are two rows of blades on each wheel, so that in this design there are two velocity stages in each pressure stage. The **shroud rings** on each row of blades are plainly visible.

Shafts and Bearings. The smaller sizes of Curtis turbines have horizontal shafts with standard bearings, as devices for flexibility are unnecessary at the speeds employed. At one time,

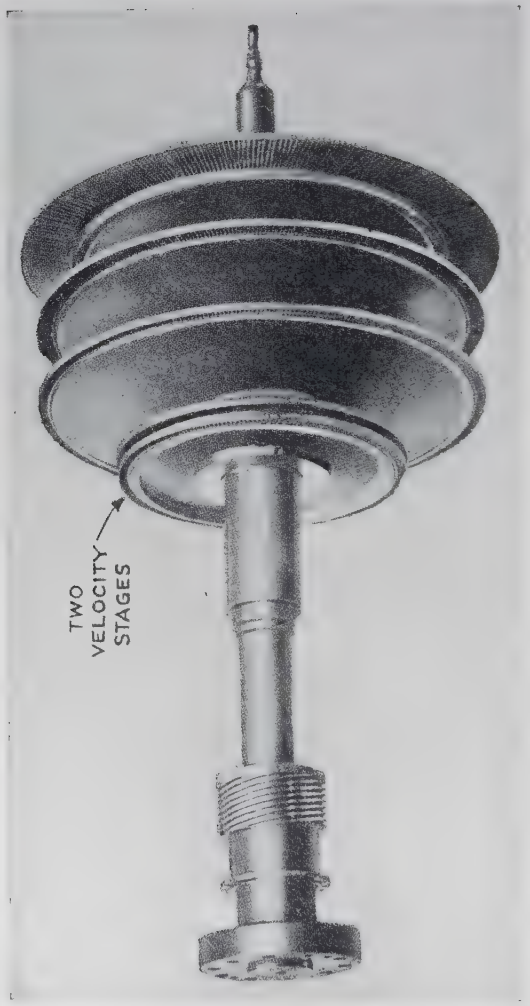

FIG. 117. Wheels and Shaft of a Four-stage Curtis Turbine (Velocity Stages in First Pressure Stage).

the larger sizes were constructed with a vertical shaft supported on a **step bearing,** shown at the bottom of **Fig. 118,** which is supplied with oil or water under pressure,* the shaft thus revolving on a film of liquid. The small disk **D** is attached by dowels **E** to the main shaft. The bearing is between the stationary plate **C** and the disk **D.**

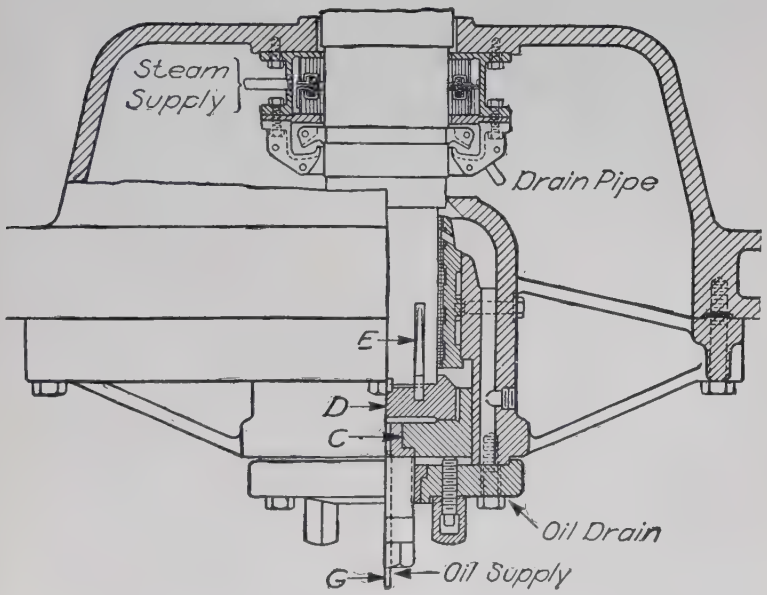

FIG. 118. Step Bearing for a Vertical Curtis Turbine.

Fig. 120 is a " phantom " view of a 300-kilowatt Curtis turbine-generator, showing the wheels, armature, and couplings as if the turbine casing and generator frame were transparent.

Curtis units are manufactured from 15 kilowatts (about 20 horsepower) at 3600 to 4000 revolutions per minute to as high as 30,000 kilowatts (nearly 40,000 horsepower) at about 1500 revolutions per minute, the general application being to direct-connected electric generators for power or lighting purposes.

* Water pressure is usually 500 to 600 pounds per square inch.

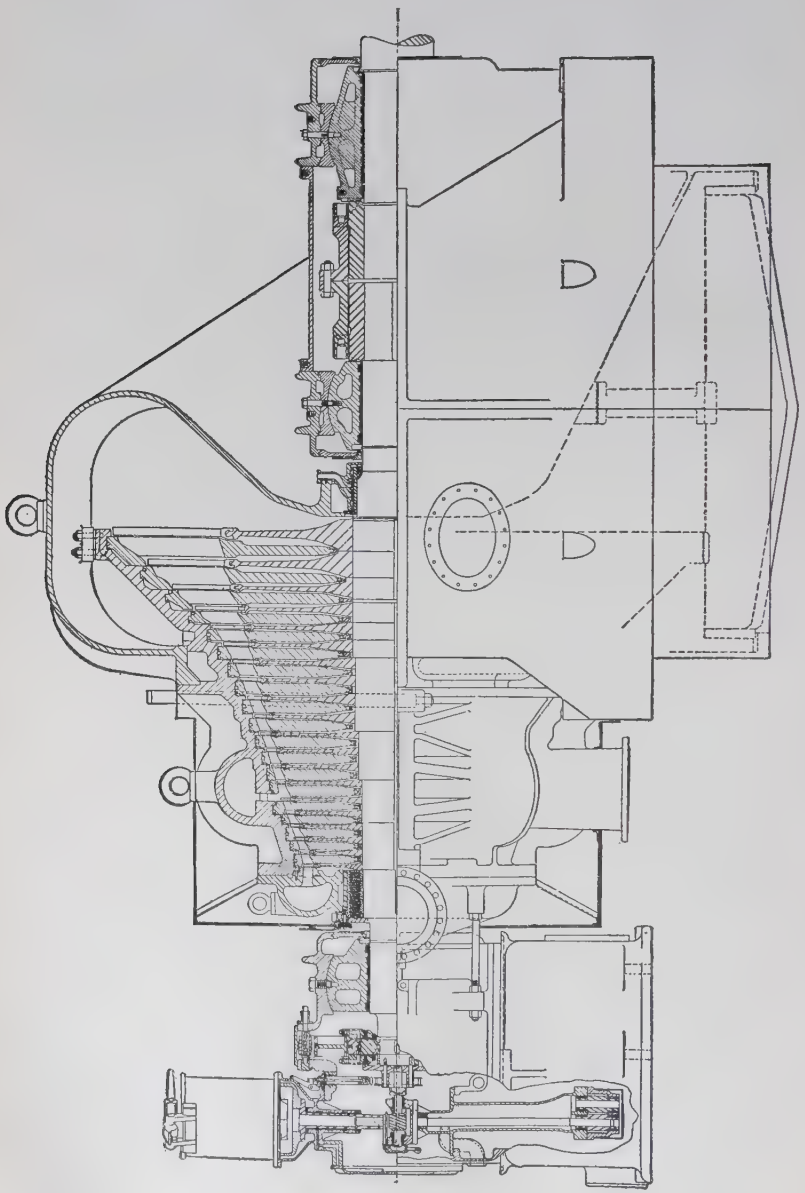

FIG. 119. Section of 30,000-Kilowatt Curtis Steam Turbine.

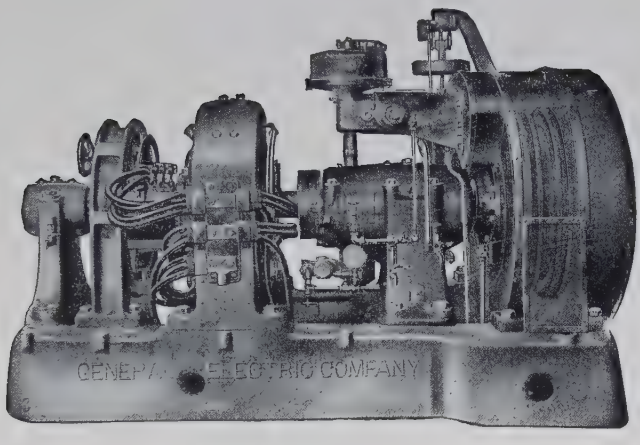

FIG. 120. Phantom View of a Curtis Turbine Showing Wheels, Armature, and Couplings.

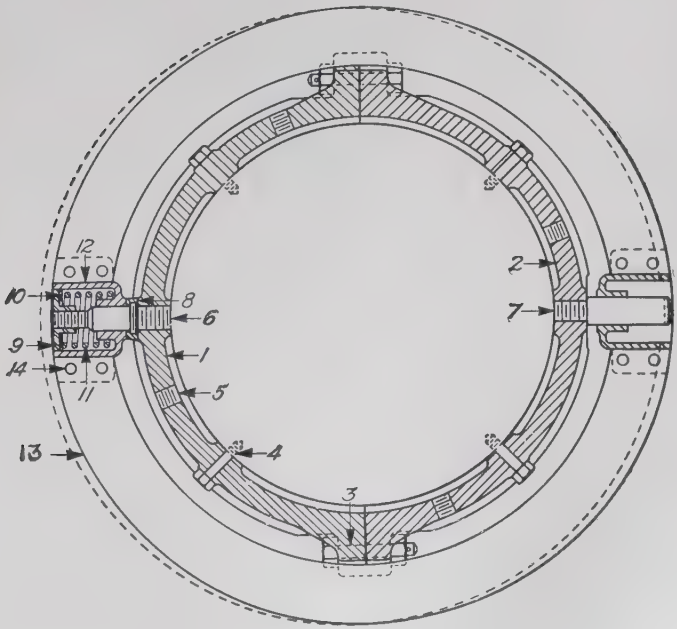

FIG. 121. Ring Type of Emergency Stop.

Emergency Valve. Since a steam turbine can accelerate at a rapid rate and this increase in speed is not easily perceptible, it is important that all these machines be equipped with simple speed limiting devices which are operated automatically in emer-

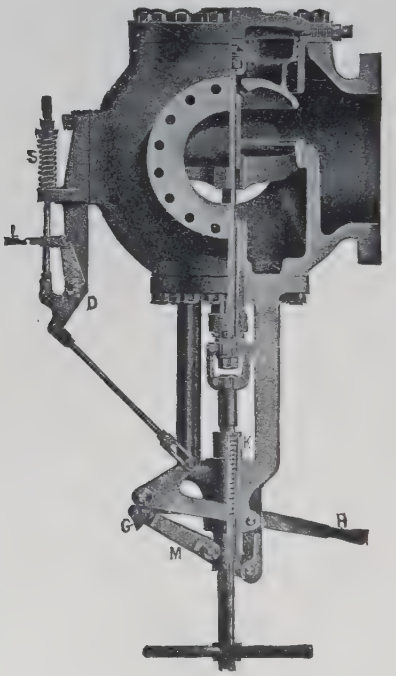

FIG. 122. Emergency Stop Valve

gencies. The device shown in **Fig. 121** consists of a steel ring (13) placed around the shaft between the turbine and the generator. This ring, which is held in place by stud bolts (4), is placed in a slightly eccentric position, and the centrifugal force due to this unbalancing is counteracted by a helical spring (11). When the speed increases, the centrifugal effort overcomes the spring and the ring moves into a still more eccentric position as indicated by the dotted lines. In this position the ring strikes a

bell-crank lever, which trips, by means of a simple auxiliary mechanism and the tension rod **L** (**Fig. 122**), the throttle valve on the main steam supply pipe. The rod **L** is connected to the crank **D**, which operates to release the spring **S**, pulling up the gear and throwing out the hook **G**, which holds the valve open. When released by this emergency ring mechanism, the valve

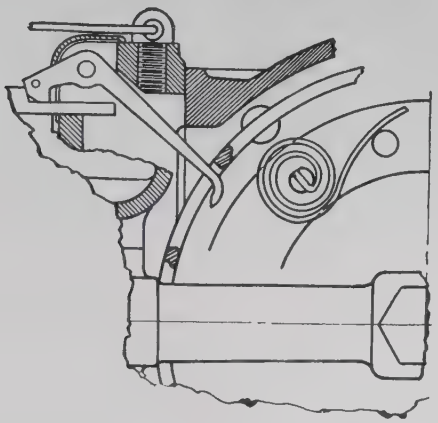

FIG. 123. Details of "Spring Type" of Emergency Stop.

descends upon its seat with a very positive motion due to its own weight and the unbalanced pressure on the area of the valve stem.

Fig. 123 shows a little different arrangement for tripping the valve. The free end of a **spiral spring** is thrown out by centrifugal force and strikes a bell-crank lever in very much the same way as the ring does. The emergency valve is opened by means of the hand wheel shown at the bottom of Fig. 122.

No turbine should be kept in operation unless it is known that this speed limiting device is in reliable condition.

Governor. Curtis turbines are governed by a method commonly known as "cutting out nozzles." By this method the

number of nozzles which are open for the discharge of steam is regulated according to the requirements of the load. This method is described and typical Curtis governors and valve gears are illustrated in Chapter VIII.

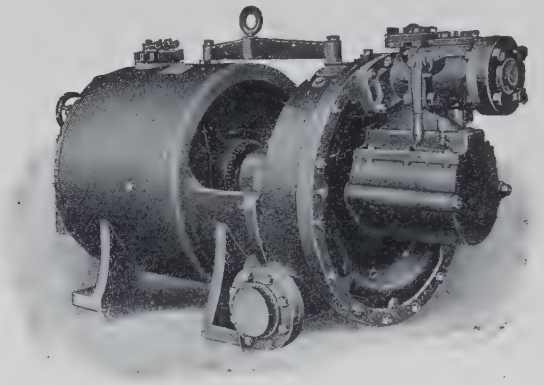

FIG. 124. 25-Kilowatt Curtis Turbine-Generator.

Small Turbines. **Fig. 124** shows a 25-kilowatt Curtis turbine and generator suitable for lighting a factory. The whole set occupies very little space compared with that required for a reciprocating engine. The shaft, armature, and turbine wheel of this set are shown separately in **Fig. 125.** One of the latest and

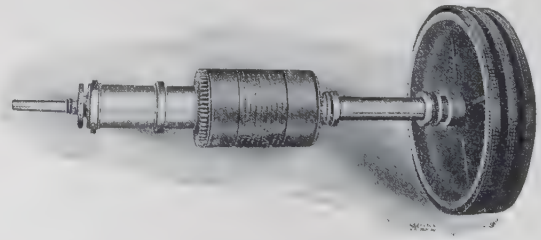

FIG. 125. Wheel, Shaft, Armature, and Commutator of a Small Curtis Turbine.

most efficient designs of blade or bucket wheels for Curtis turbines with two pressure stages is shown in **Fig. 125a.** The disks or wheels in the two stages are of the same diameter but the much greater blade length toward the low-pressure end

makes the actual over-all diameter at that end considerably larger than at the high-pressure end.

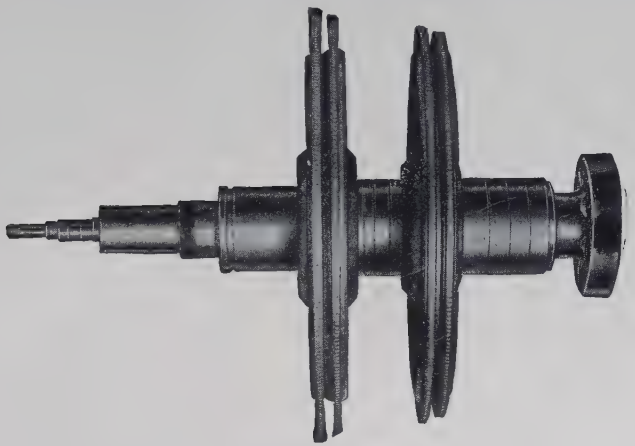

FIG. 125a. Latest Construction of Blade Wheels of Curtis Two-stage Turbines.

The most recent improvement in valve gears on Curtis turbines is shown on the turbine illustrated in **Fig. 125b.** The

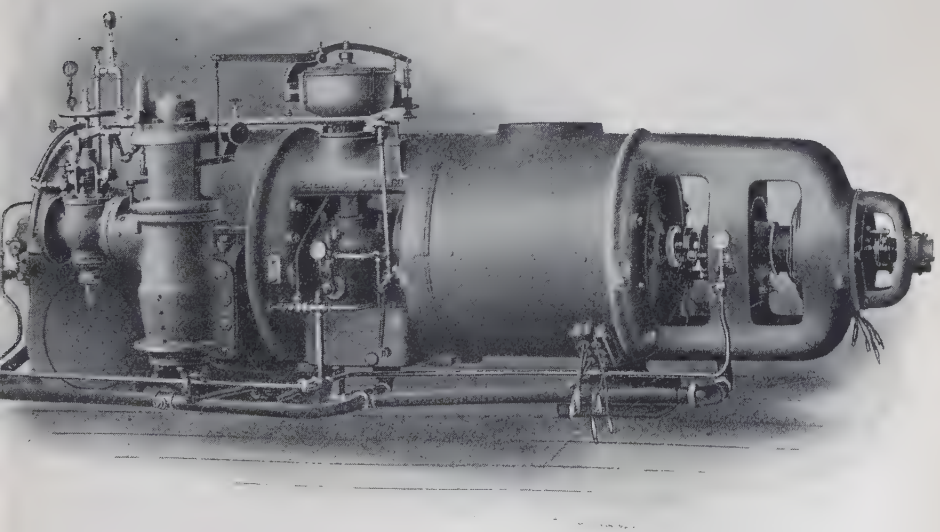

FIG. 125b. Horizontal Curtis Steam Turbine with Latest Steam-operated Valve Gear.

centrifugal governor is placed at the upper end of a vertical shaft between the turbine and generator, which is driven by worm gearing from the main shaft of the turbine. The motion of the main governor is transmitted to the valve gear * by means of levers and rods, which operate a small pilot valve, controlling the admission of steam to a steam cylinder at the upper end of the valve mechanism. That is, the pilot valve serves to admit steam either above or below the piston in the steam cylinder. The piston rod extends into the steam chest and on this rod are mounted a series of spiders, which engage a corresponding series of annular double-seated admission valves. The spiders on the valve rod are arranged so that the valves are lifted from their seats in sequence as the rod is raised by the steam cylinder under control of the pilot valve. As each of the valves is lifted from its seat, steam is admitted from the central space within the annular valves to passages leading to the turbine nozzles.

Correction Curves. Typical curves showing the variation in steam consumption of a 500-kilowatt Curtis turbine, due to increasing superheat and vacuum, are shown in **Figs. 126** and **127.**

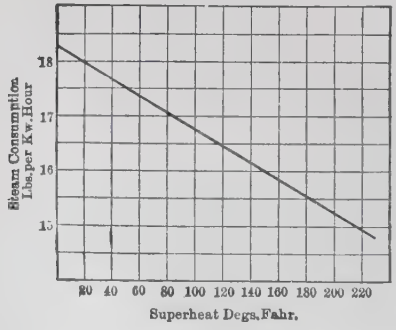

FIG. 126.

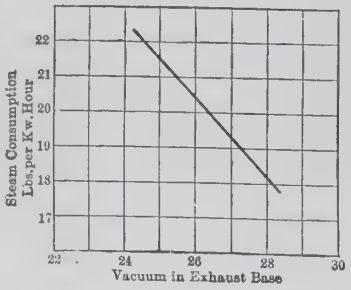

FIG. 127.

Curves Showing the Effect of Superheat and Vacuum on the Steam Consumption of a 500-Kilowatt Curtis Turbine.

Such curves become most useful, however, when they are reduced to equivalent percentages like those for De Laval turbines

* This valve gear is described more completely with the help of illustrative figures on pages 313 and 320.

shown on pages 216 and 217. In Chapter VI the correct method for making this transposition was explained.

Steam Consumption. **Fig. 128** is a curve to show approxi-

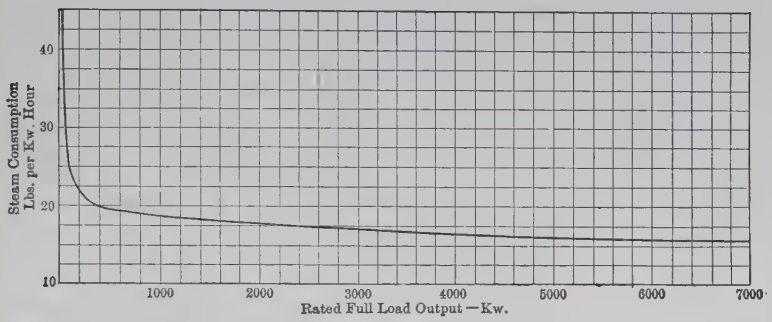

FIG. 128. Approximate Steam Consumption of Any Size of Curtis Turbine with 165 Pounds per Square Inch Absolute Pressure, 28 Inches Vacuum, and no Superheat.

mately the steam consumption of any size of Curtis turbine at the rated full load. All the data for this curve were corrected by using percentage curves like those referred to above, which served to reduce the conditions of the various tests to assumed conditions of 165 pounds per square inch absolute steam pressure, 28 inches vacuum, and no superheat. To get sufficient data for this curve it was necessary to include some tests made with commercial loads, making its values probably a little higher than they would be if all the tests had been run with a constant load.

Analysis of Losses in a Curtis Turbine. Steinmetz has calculated the energy distribution in a typical two-stage Curtis turbine and has given the results in the diagram in **Fig. 129.**

WESTINGHOUSE IMPULSE TURBINES.

Still another type of steam turbine intended particularly for small capacities has been developed by the Westinghouse Machine Company, as illustrated in **Figs. 130** and **131.*** Machines of this type are suitable for a capacity as low as one kilowatt. By this construction it is possible to secure with the use of only

* Turbines of this type are known abroad as "Electra" designs. In these foreign turbines the direction of flow of steam is different in that it is radial.

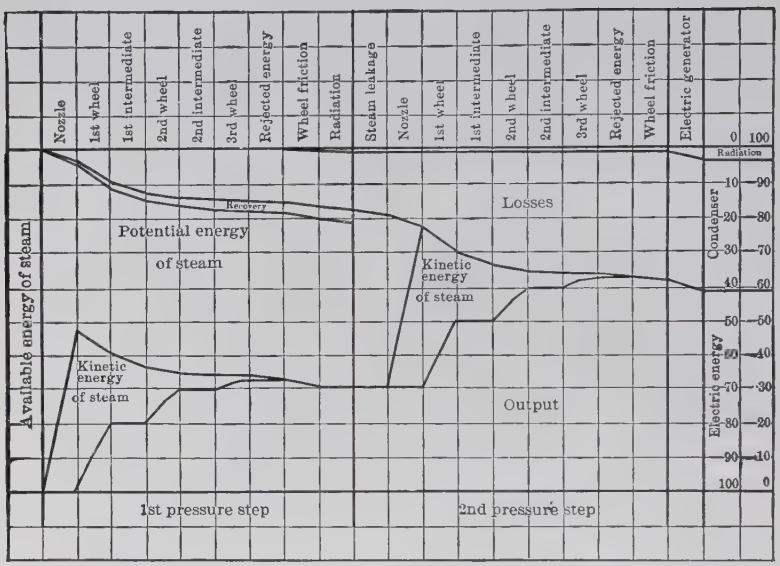

FIG. 129. Analysis of the Losses in a Turbine with Three Velocity Stages in Each of Two Pressure Stages.

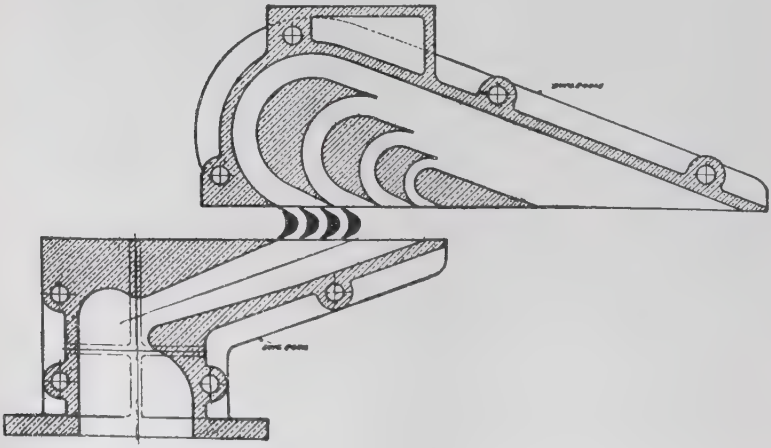

FIG. 130. Westinghouse Impulse Turbine (with one reversal).

one row of moving blades an effect similar to the **velocity stages** in a Curtis turbine with only one row of moving blades or buckets as illustrated in **Fig. 130.** This design is suitable for the pressure drop in non-condensing operation. The arrange-

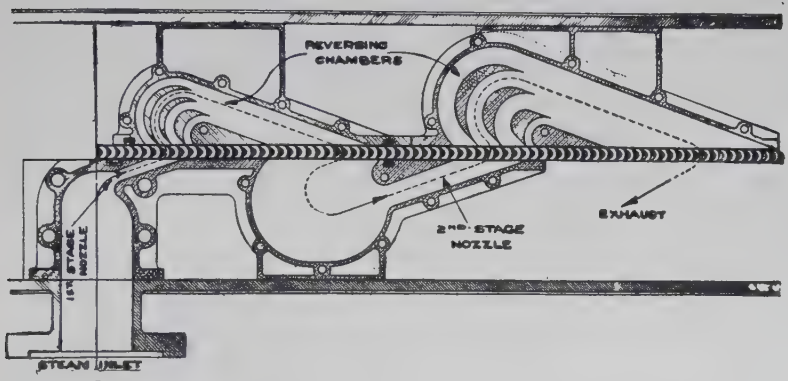

FIG. 131. Westinghouse Impulse Turbine (with two reversals).

ment shown in **Fig. 131** has two reversals of the steam and is suitable for condensing operation.

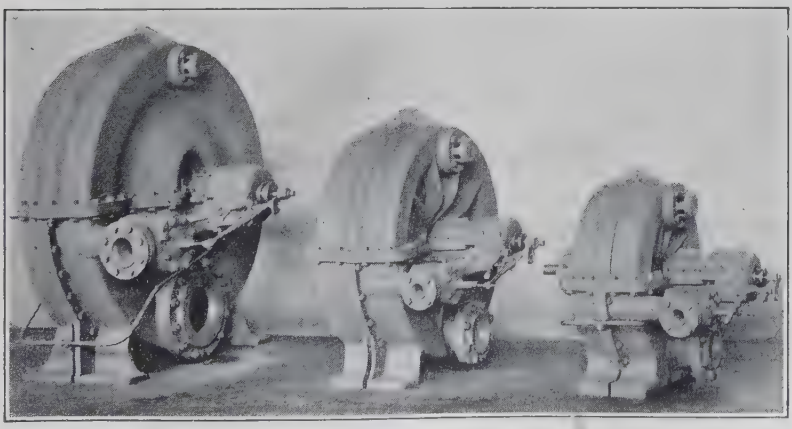

FIG. 131a. Three Sizes of Small Westinghouse Impulse Turbines.

The advantages of this construction are that it is essentially simpler than the De Laval in the elimination of speed-reduction gears, and requires a very much smaller number of blades than the Curtis type.

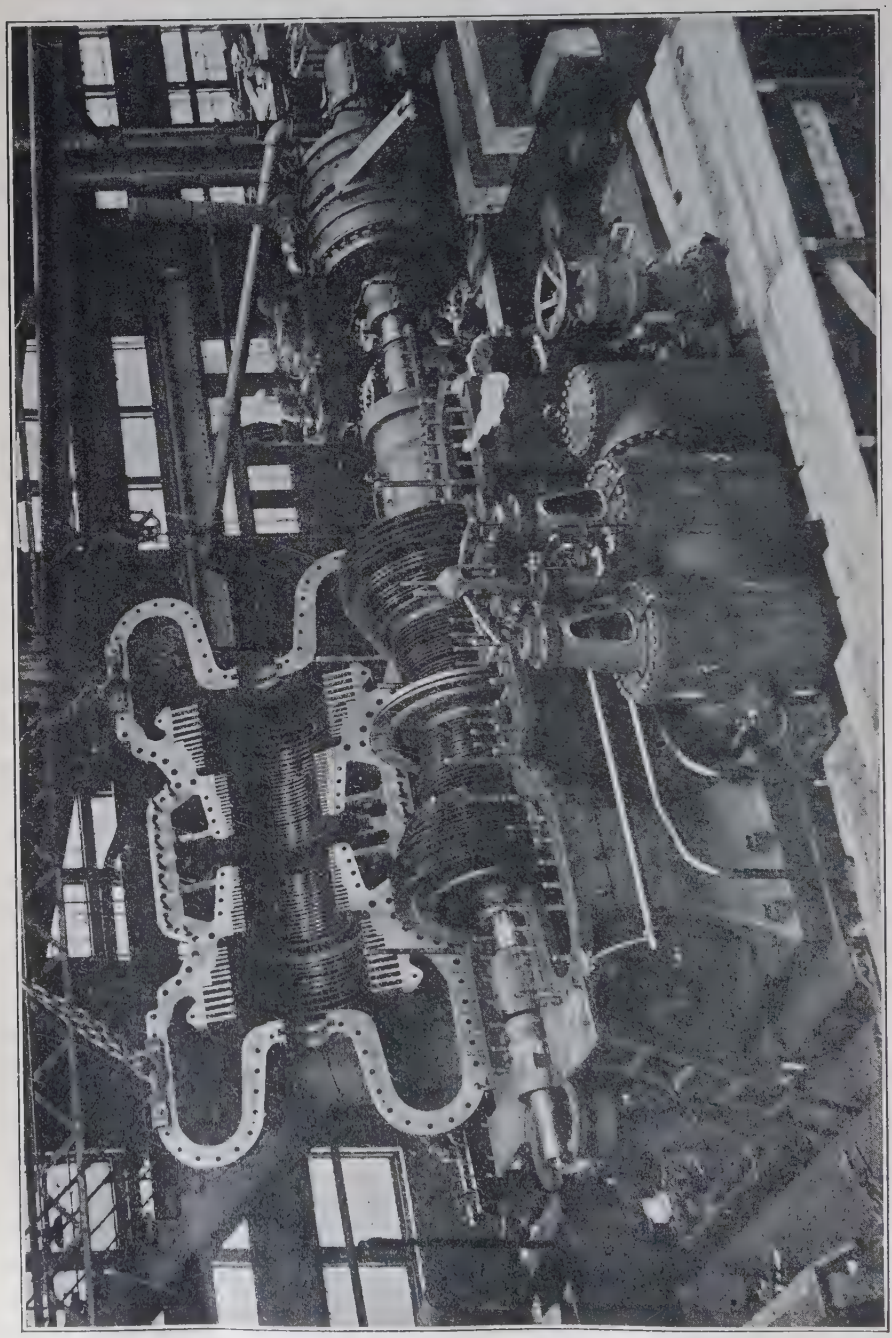

Fig. 131b. 30,000-Horsepower Impulse-Reaction Steam Turbine.

RATEAU TURBINES.

Professor Rateau of Paris is also a pioneer in the development of a well-known type of steam turbine. His first experiments were made with a turbine having a single impulse wheel; but he soon abandoned this type in favor of a multiple wheel construc-

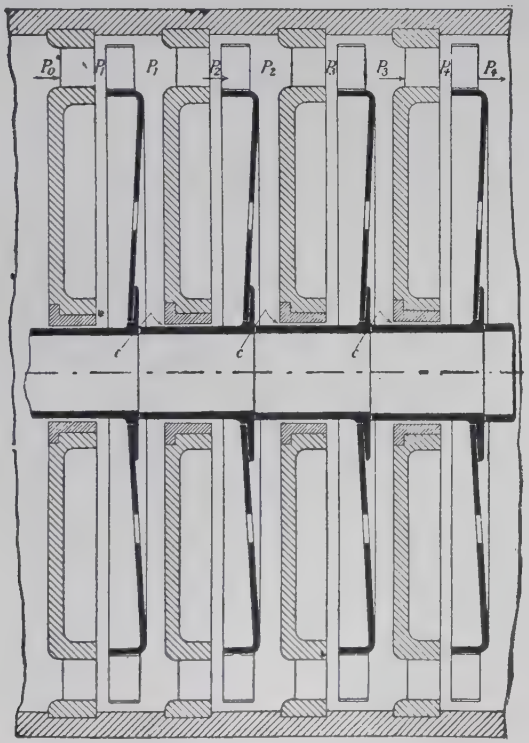

FIG. 132. Diagrammatic Representation of Four Stages of a Rateau Turbine.

tion. The Rateau turbine is often called "**multicellular,**" meaning that it consists of a large number of "**cells**" or **pressure stages** of which the separating walls are diaphragms similar to those in a Curtis turbine. The principle of the Rateau turbine is illustrated by the section drawing in **Fig. 132**, which shows diagrammatically four stages. Essentially the

Rateau type differs from that of Curtis in that it has a much larger number of pressure stages or "cells" but no velocity stages. There is therefore only one row of blades in each stage. Except for the fact that turbines with simple disk wheels can be operated at higher blade speeds than reaction turbines of the drum type (Parsons), making the efficient utilization of steam at higher velocities possible, the Rateau and the Parsons types would require the same number of stages. Rateau turbines have from 20 to 40 stages respectively, depending on whether they are for non-condensing or for condensing service. For given blade-speed, steam pressure, and superheat, the number of stages increases, although not proportionally, as the exhaust pressure is reduced.

Nozzles and Diaphragms. Annular nozzles are set in each of the diaphragms between the stages. Because of the large number of stages, the pressure drops are very small, so that the **nozzles** are made with a uniform cross-section along their length; that is, they are **non-expanding.** To allow for the increased volume of the steam as it expands, in almost all the other types of impulse turbines the nozzles are made with at least somewhat larger radial width for the lower pressures. In Rateau turbines, however, the same increased nozzle area is secured by increasing only the arc or part of the circumference occupied by the nozzles. In the last stages, then, where the entire circumference of the diaphragm is made use of, a complete annular jet results.

Rateau nozzles are arranged in groups very much like the Curtis nozzle plate shown in Fig. 114. Diaphragms of several sizes of these turbines are shown in **Fig. 133.** Several groups of nozzles can be seen in each diaphragm. At the high-pressure end of the turbine there are only a few groups (usually about three), but in each succeeding stage there is a greater number. Because the steam discharged from the blades is carried along a short distance by the rotation of the wheel, a portion of each group of nozzles is located a little in advance of the preceding set.

One of the advantages claimed by Rateau for multi-stage types over those in which the steam is admitted around the whole periphery in all the stages, is that since the volume of the steam

FIG. 133. Diaphragms of a Rateau Turbine Showing Nozzles and a Shaft Packing with "Water Grooves."

at the admission end is small, the blades, in the Parsons type for example, have necessarily a small radial height, so that there is more friction due to the passage of steam than where the steam spaces are larger and the volume of the steam is large in proportion to the surface of the blades.

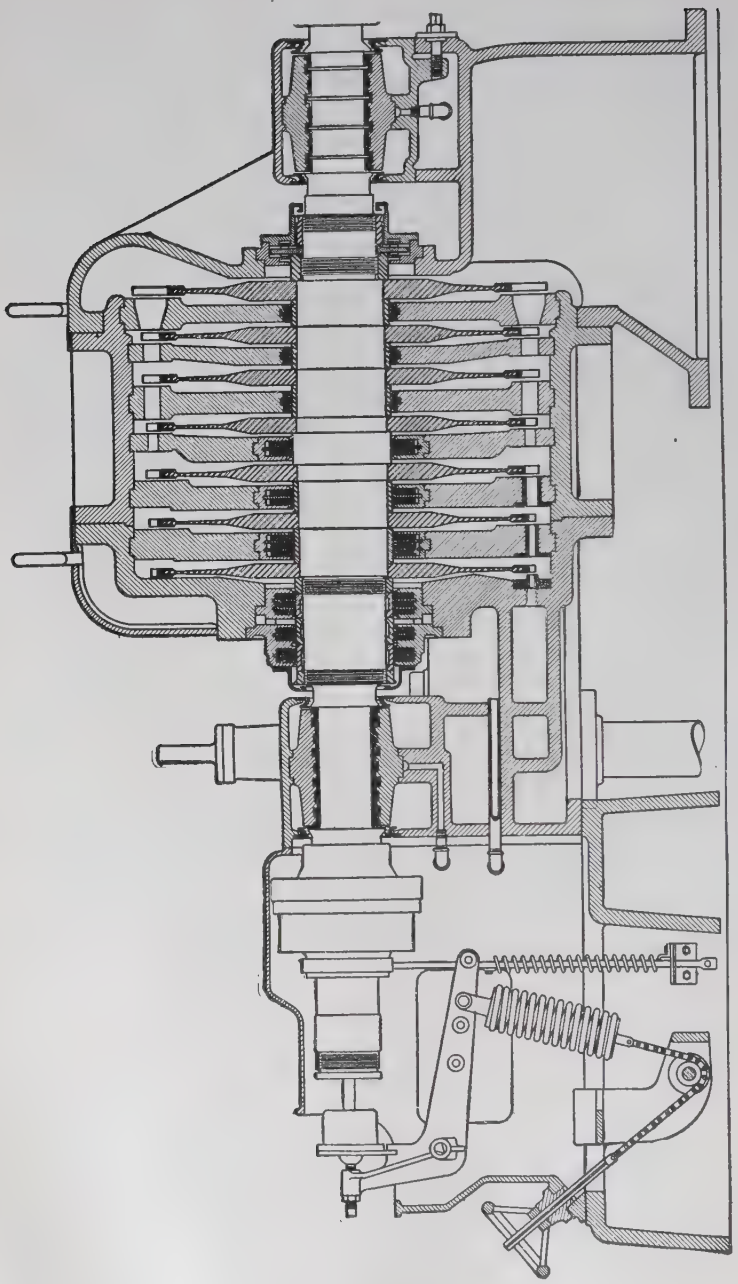

FIG. 134. 500-Horsepower Ridgway-Rateau Turbine (7 stages).

Description. **Fig. 134** is a section of a 500-horsepower Ridgway-Rateau turbine of seven stages. It will be observed that this turbine is a remarkably simple design. This turbine is designed to operate at 2400 revolutions per minute. In this figure the main steam pipe is shown at the bottom of the casing. From this pipe the live admission steam is discharged into the cored passages supplying the first stage nozzles after passing through the throttle valve controlled by the governor. The exhaust pipe leading to the condenser is cast integral with the

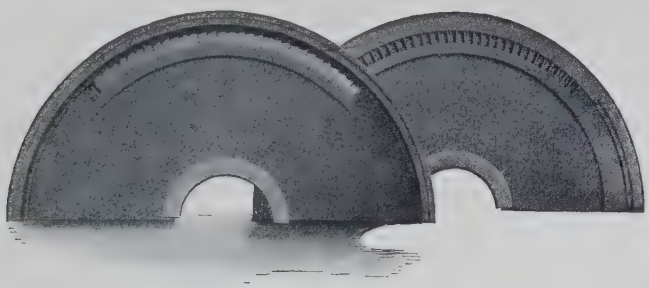

FIG. 135. Cast-in Nozzles of Ridgway-Rateau Turbines.

base at the right-hand end of the casing. Carbon packings in bushings of anti-friction metal are fitted in the diaphragms where the shaft passes through them. Steam leakage through these packings is reduced to a very small amount.

A Moore steam turbine which differs from the conventional Rateau type in having two velocity stages in the first pressure stage is shown in **Fig. 137.**

Wheel Disks. Typical Rateau disks, as made for the Ingersoll-Rand steam turbine, are shown in **Fig. 136.** Details of original Rateau designs are shown in **Fig. 132.** In some types a shroud ring is fitted around the blades. The blades resemble those used in De Laval and Curtis turbines. The holes shown in the disks are provided for equalizing any possible difference in pressure. **Fig. 136** shows also a detail of the blading.

Manufacturers. Rateau turbines are constructed by the pioneers, Sautter, Harlé & Co., at Paris, by the Maschinenfabrik Oerlikon in Switzerland and by many other companies in Europe American types are made by the Ridgway Dynamo & Engine Company of Ridgway, Pa., the Ingersoll-Rand Company of Phillipsburg, N. J., and the Southwark Foundry & Machine Company of Philadelphia. Rateau designs are frequently used in combination with Curtis blading, as for example in **Fig. 137,** and the example, pages 104–113.

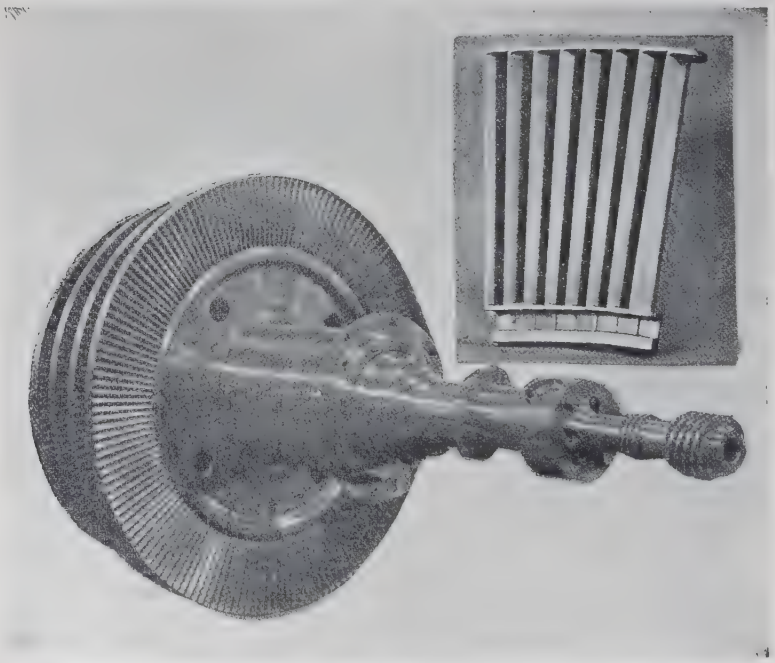

FIG. 136. Disks of Ingersoll-Rand Turbine Assembled on Turbine Shaft.

Low-Pressure Rateau Turbines are extensively used in Europe to operate with the exhaust steam from rolling mill and mine engines. Professor Rateau has designed a steam accumulator (Fig. 182) for application in such cases where the steam supply is intermittent. It is described in Chapter IX in the discussion of low-pressure steam turbines.

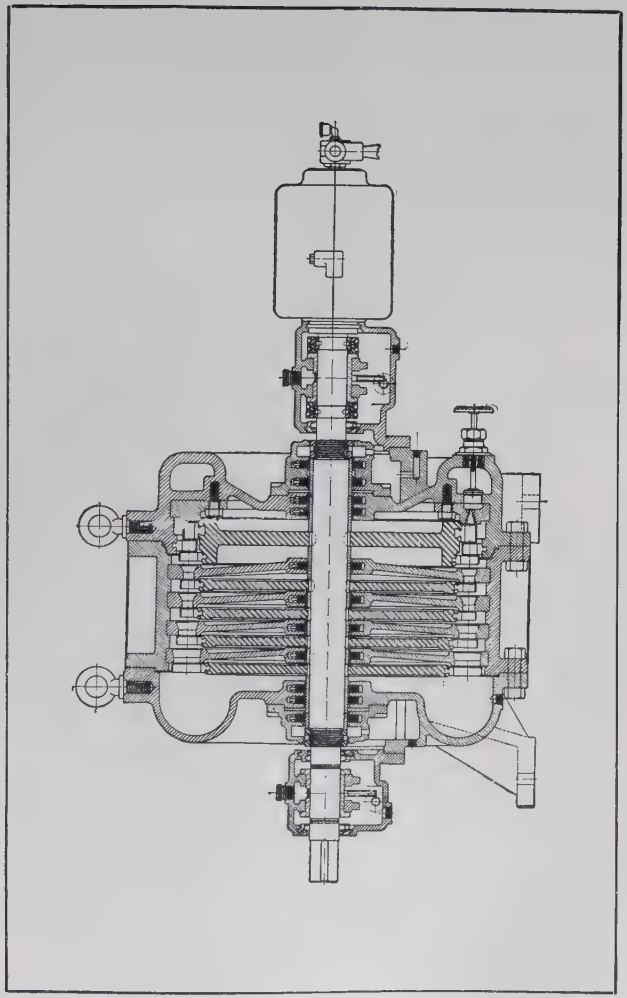

FIG. 137. Moore Steam Turbine.

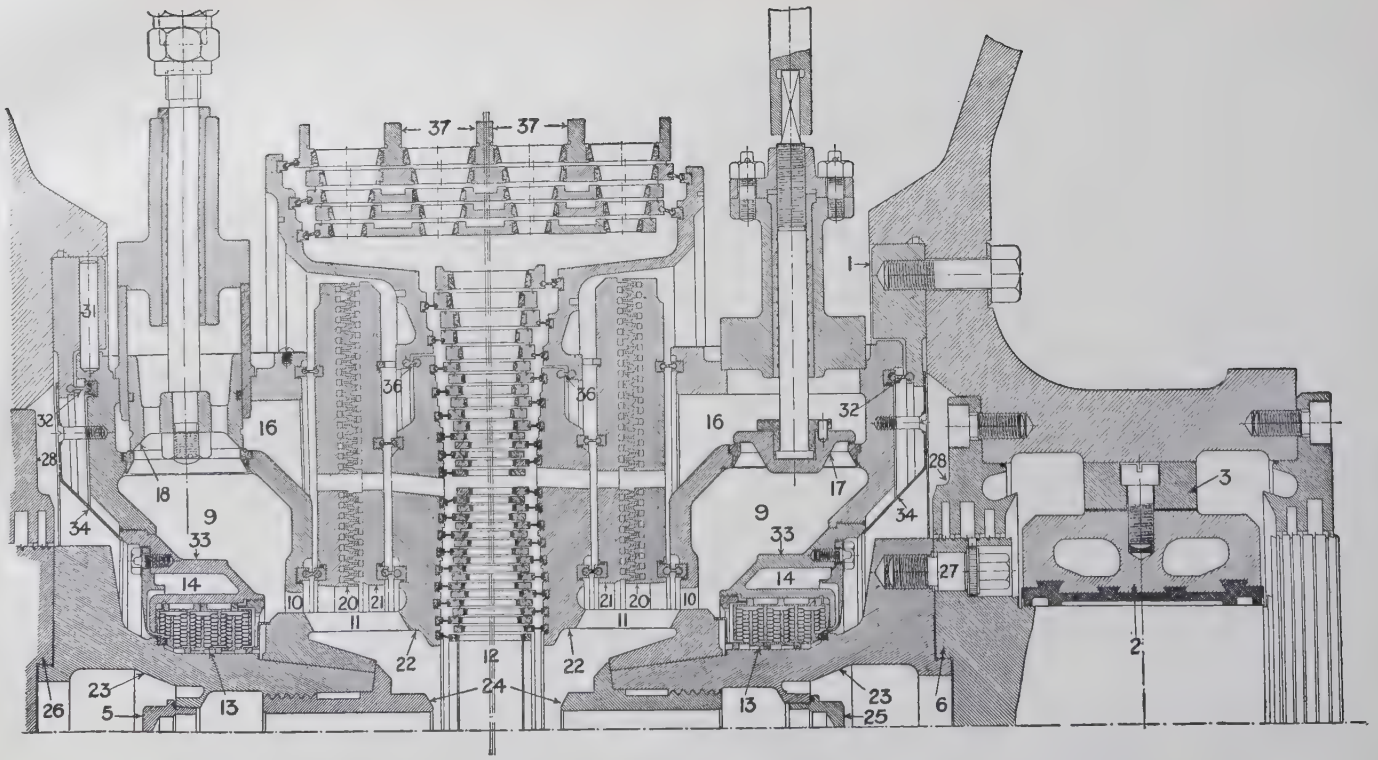

FIG. 141. Cross-Section of a Ljungstrom Turbine Showing Blade Wheels, Shaft Packings, and Bearings. (282)

LJUNGSTROM TURBINES

Until recently all the commercial types of steam turbines were designed to discharge the flow of steam in the direction of the shaft with only a relatively small increased diameter of the blade wheels or rotors at the low pressure end. A new type of turbine, which seems to have some possibilities for commercial development, has been designed and manufactured in Europe, which differs materially from the usual types. This is the Ljungstrom turbine, which is a reaction type but arranged for radial instead of axial flow of the steam; that is, the steam flows radially outward from the shaft to the periphery. Although the Ljungstrom turbine has been manufactured in America, as yet its commercial possibilities are still uncertain, usually because of manufacturing costs. The aim of this design is to increase the blade speed by revolving each disk with its blades in the opposite direction to the adjoining disks. The relative velocity of the blades to each other is thus twice the relative velocity when, for example, adjoining blades are stationary as in reaction blading of the Parsons type.

The Ljungstrom turbine shown in Fig. 141 consists in its essential parts of two *sets* of concentric rows of blades and each row is connected to its respective disk. The two *sets* of rows of blades rotate in opposite directions. Each row of these moving blades is connected to its supporting disk on one side by a bulb-headed expansion ring; on the other side, the blades are unattached. There are no stationary blades. High pressure steam enters a steam chest of the turbine located around the central shaft very much as steam enters around the shaft of purely reaction turbines of the Parsons type. From this steam chest, the steam flows readily outward between two *sets* of rows of moving blades which rotate together with their supporting disks *in opposite directions*. If, for example, such a turbine is used to drive electric generators, one set of blade disks is connected to one generator and the set of blade disks rotating in the opposite direction is connected to a second generator. The two generators are thus

connected electrically and the two generators operate as a single unit. It is interesting to note that an 8000 kilowatt unit of this type has 21 rows of moving blades, and the mean diameter of the largest blade ring is 35 inches and of the smallest, 6 inches. A turbine of the Ljungstrom design is very light in weight and compact because the ratio of blade speed to steam speed is high, its efficiency as regards the use of steam in the turbine blades is remarkably good. It also has the advantage of being suitable for highly superheated steam without danger of distortion.

The length of the blades increases as the expansion proceeds. At the end of the set of stages having single-row blades, the length of the blades increases to a point where a single long blade would be too weak. In the succeeding stages blades the steam flow is divided into four parts. This gives an opportunity to introduce reinforcing sections into the blades.

To enable the turbine to carry an *overload*, provision is made to admit high pressure steam to the blades through the passages 16 by means of a hand-operated valve 17 or an automatic valve 18. Labyrinth disks are provided to prevent the leakage of high pressure steam into the exhaust when the overload valves are open. Labyrinth disks 20 are stationary and disks 21 rotate with the blade wheels going in one direction. When the turbine is carrying an overload, the high pressure blading does not function very much. It is probably the most efficient turbine that has yet been built. Some experimental work has been done in this country on turbines of this type but as yet no factory has been able to manufacture them to compete with the axial flow machines.

WILKINSON TURBINES

To prevent the leakage of steam between the diaphragms and the shaft (stage leakage), which in some impulse turbines is a considerable loss — often 10 to 20 per cent. — a very ingenious system of **steam packing** has been devised by Wilkinson. A drawing illustrating this system is shown in **Fig. 142.** By this device, steam containing a large amount of condensation is dis-

charged into grooved packings between the diaphragms and the shaft through ducts drilled into the hubs of the disks. This wet steam is taken from a part of the **labyrinth packing** at the high-pressure end of the turbine — through which there is always some leakage of steam — and is conducted in the ducts shown in

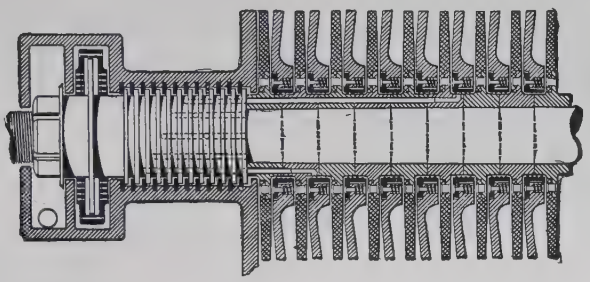

FIG. 142. Wilkinson Labyrinth Stage Packing.

the figure, which are arranged so that the steam discharged into a diaphragm packing is at a slightly higher pressure than that on either side of the diaphragm. It is probably possible in this way to practically eliminate the loss due to stage leakage.

ZOELLY TURBINES

The **Zoelly** turbine is a modified form of the multi-stage impulse type. It has fewer stages (about 5 to 10), and is generally a much simpler design than a Rateau turbine. It represents a noteworthy attempt at increasing the steam velocities in the blades; but with it results the great disadvantage that the surfaces of the numerous large wheels and blades, many of which move at high speeds in steam of high pressure, produce excessive losses due to fluid friction. This fluid friction of disks and blades increases, of course, enormously as the speed and the pressure of the steam are increased.

In a Zoelly steam turbine there are a number of single impulse wheels, each rotating in a separate chamber, the walls of which are formed by stationary flat disks to which the nozzles are attached. At the high-pressure end the nozzles occupy only a

portion of the periphery; but the area covered gradually increases till at the low-pressure end practically the whole circumference is covered. The tops of the blades are cut off parallel to the shaft, but at the roots they are made with a considerably greater height on the discharge side than on the entrance side. This is of course desirable to allow for the loss of velocity in the blades, but it is stated that the height is made unusually large to cause the steam to flow smoothly through them without producing eddies.* The most interesting part of the design of this turbine is, however, in the construction of the blade wheels to resist the stresses due to extraordinarily high peripheral speeds. As the blades for this turbine are made at present, they are much longer in comparison with the size of the wheel than in any other turbine; in fact, the length of the blade is sometimes nearly one-half the radius of the wheel. These long blades are tapered off toward the outer ends in order to make them of uniform strength.

Zoelly deserves the distinction of being the first to adopt, in impulse turbines, the use of blades with unequal angles at the entrance and exit sides. Simplicity in the design of the working parts is the most striking feature of these turbines.

Stage Leakage between the diaphragms and the shaft of steam turbines resembling the Curtis and Rateau types is easily measured by computing the flow through the nozzles for discharging steam that are located in the diaphragm through which leakage is to be determined. For this calculation by the use of the formula (4), page 39, only the area of the nozzles actually open and the *initial* pressure at these nozzles are required in most types of impulse turbines of a few stages; that is, when the final or discharge pressure of the steam from the nozzles is less than .58 of the initial pressure of the steam entering the nozzles. The difference between the actual steam consumption, preferably measured by a surface condenser, and the calculated flow is the stage leakage.

* It is probable that there is considerable expansion of the steam in such blades.

PELTON AND SIMILAR BUCKET WHEEL TURBINES.

Impulse turbines with bucket wheels of the Pelton type have recently received a great deal of exploitation from inventors in America. This type has probably received so much attention because the Pelton water wheel, commonly known as the " hurdy-gurdy " wheel, has proved so efficient in American water power plants where a high head is available.

Professors Rateau in Paris and Stumpf and Riedler in Berlin have done a great deal of experimental work on such turbines, but they have practically abandoned them for those with blade wheels of the common axial flow type. Rateau has now adopted his famous " multicellular " type, and Riedler is engaged in developing the Curtis turbine in Germany.

Sturtevant Turbine. A steam turbine has been developed by the B. F. Sturtevant Company, Boston, Mass., from designs prepared by Mr. O. D. H. Bentley, which in the general bucket arrangement is similar to the early Riedler-Stumpf type.* This turbine was developed primarily for driving blowers, but it is, of course, equally applicable for other purposes. It is notable particularly for its extreme simpl city and strength.

Fig. 143 is a good illustration of this turbine, showing the buckets in the wheel and the segments on the inside of the casing including the nozzles and the stationary " reversing " buckets. Three, four, or five of the latter are cut into the segment, following each nozzle, depending on the velocity of the steam. **Fig. 144** shows more clearly the arrangement of the

* The unique feature of the **Riedler-Stumpf turbine** was in the bucket wheels, of which the Sturtevant wheel in Fig. 143 is a good illustration except that there was usually a double row of buckets on the rim of each wheel. These wheels were patented by Prof. Stumpf and developed with the assistance of Prof. Riedler. The buckets were cut into the rim of the wheel by a milling machine, and were arranged to overlap each other like the shingles of a roof, instead of being placed one in front of another as in a Pelton water wheel. Unusual attention was given to balancing the wheels, which were in the form of flat disks. Stumpf states that these disks were balanced so accurately that the center of gravity came within .004 of the diameter from the geometric center. These disks were similar to the design in Fig. 216. It is stated that such wheels were designed for a factor of safety of 5 at a rim speed of 1200 feet per second.

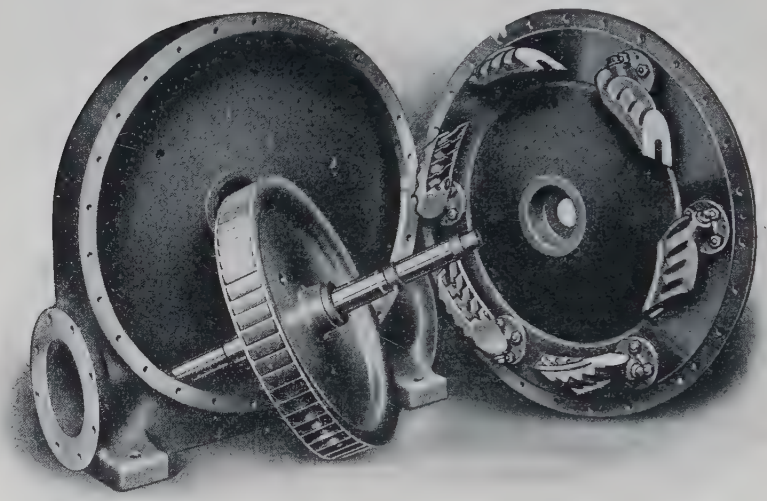

FIG. 143. Sturtevant Turbine Showing Arrangement of Buckets.

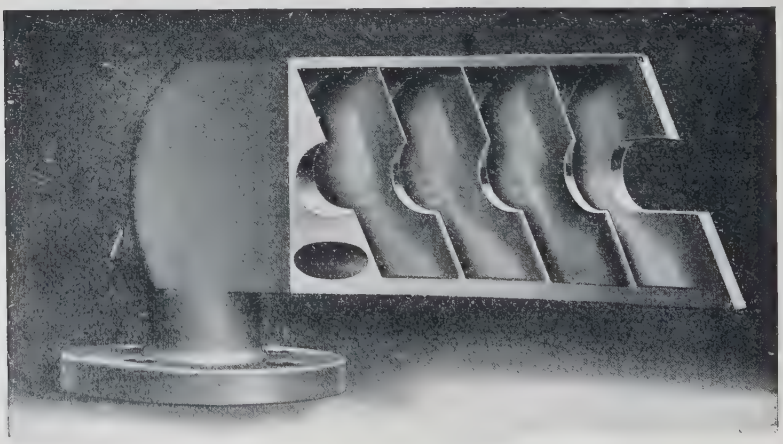

FIG. 144. Sturtevant Nozzle and Stationary Buckets.

nozzle with respect to the stationary buckets. The nozzle is the elliptical opening shown next to the first bucket, counting from the left. As shown here the steam flow will then be toward the right from the nozzle into the bucket opposite it on the wheel. From this moving bucket the steam will be diverted

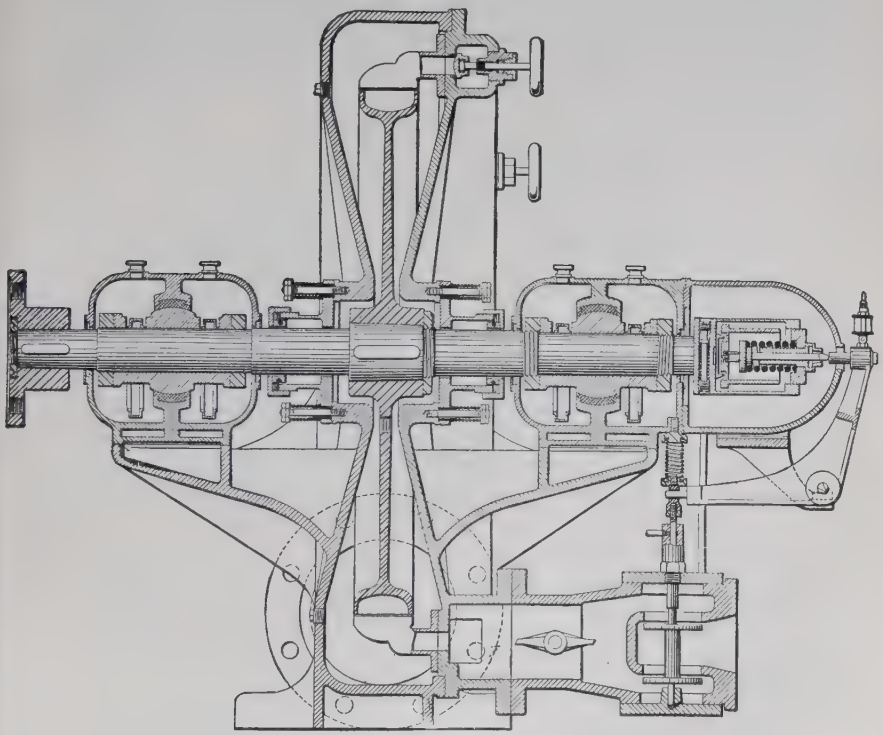

FIG. 145. Section of Sturtevant Turbine.

back into the stationary bucket next to the nozzle and the steam path continues alternately through moving and stationary buckets until the last stationary bucket has been passed, when it will escape into the casing and into the exhaust pipe.

Fig. 145 is a sectional view of the turbine. Hand wheels are shown on valves by which the flow of steam into the nozzles can be controlled. It is thus possible to close some of the nozzles

on light loads and obtain nearly as good efficiency and steam consumption as at full load. The method is the same as explained for De Laval turbines on page 204. The governor of the centrifugal throttling type is shown at the extreme right-hand end of the turbine shaft. It is one of the type with weights acting on knife edges, in principle somewhat like the De Laval governor (Figs. 160 and 161). Like other parts of this turbine it is made as simple as possible, consisting of very few parts as shown in **Fig. 147.**

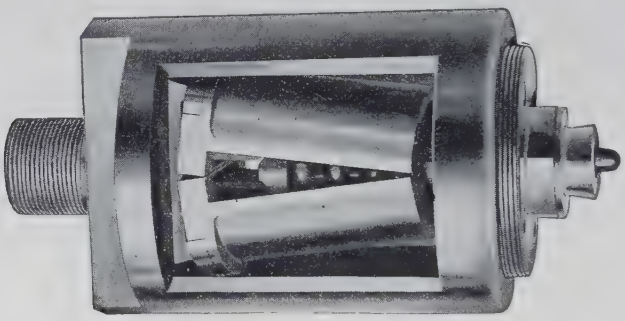

FIG. 147. Sturtevant Governor.

The main bearings have solid linings of phosphor bronze. They are of the self-aligning, ring-oiling type. The weight on these bearings never exceeds 14 pounds per square inch of bearing surface.

The speed of these turbines is from 1000 to 4000 revolutions per minute. These low speed limits compared with the speeds of single-stage De Laval turbines are made possible by the application of the **velocity stage principle** in the use of the **reversing buckets.**

Fig. 148 is an illustration of a Sturtevant turbine direct-connected to a ventilating fan or blower. The governor mechanism is at the left-hand end. Valves for closing nozzles to adjust the steam supply to the load, to get the best efficiency of the nozzles and blades, are shown clearly outside the casing.

The bucket wheel is a single forging of open hearth steel, and as the buckets are cut out of the solid metal, a wheel of great strength is secured. Blade breakage and "striking" are eliminated, because if the bucket wheel should get out of line and touch the casing on its sides, the result would be merely like the rubbing together of two steel plates, which would produce no serious injury.

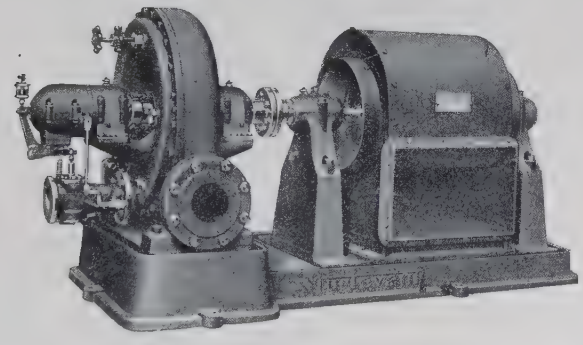

FIG. 148. Sturtevant Turbine Direct-connected to a Blower.

This turbine was designed to require the minimum amount of attention and repairs. It is stated that it can be operated continuously under ordinary conditions with no more attention then the weekly filling of the oil wells in the main bearings. It is therefore particularly well suited for driving any type of auxiliary machinery, especially such as may be located in inaccessible places. Such turbines make operating expense and depreciation low, and it is stated by some engineers that they have operated turbines of this type for five years at a time without any expense for repairs.

Kerr Turbine. An impulse turbine of the Pelton type has been patented by Mr. C. V. Kerr and was formerly manufactured by the Kerr Turbine Company, Wellsville, N. Y. In this turbine Pelton double cup-shaped buckets are used into which jets of steam at high velocity are discharged from nozzles, located

as in **Fig. 149,** around the periphery of the wheel. The inside surface of each bucket is formed of two intersecting surfaces of

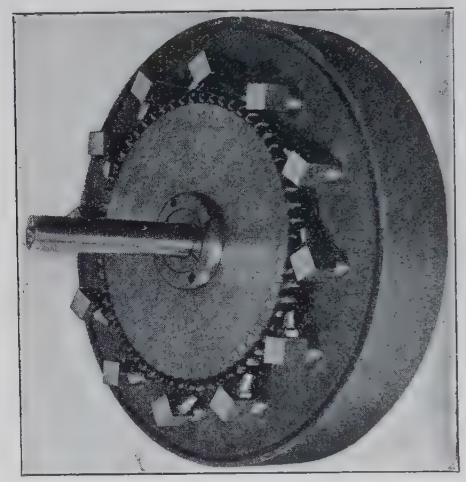

FIG. 149. Kerr Bucket Wheel and Nozzles.

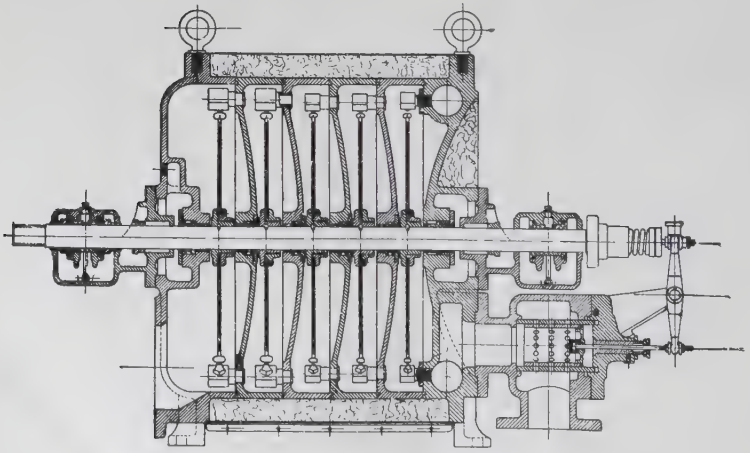

FIG. 150. Sectional View of the Kerr Turbine (Pelton Type).

revolution, approximately ellipsoidal, somewhat like the reflector of a locomotive headlight.

A section of this turbine is shown in **Fig. 150.** In this

design there are five compartments or stages, each with a single bucket wheel. In the design of this turbine provision was made for its manufacture in standard "unit parts." In this sense the turbine casing shown here in section consists of steam and exhaust end castings and a number of nozzle diaphragms between the ends. In the chambers thus formed steel disks revolve, each having a row of buckets dovetailed in the rim. By this simple arrangement it is possible to build up turbines of any size for any pressure and vacuum by adding sections of nozzles as may be required. The nozzles are screwed into steel nozzle bodies, which are accurately set in place and riveted into the diaphragm castings.

The **governor** is of the centrifugal type, consisting of weights moving on knife-edges. A section of the governor weights and

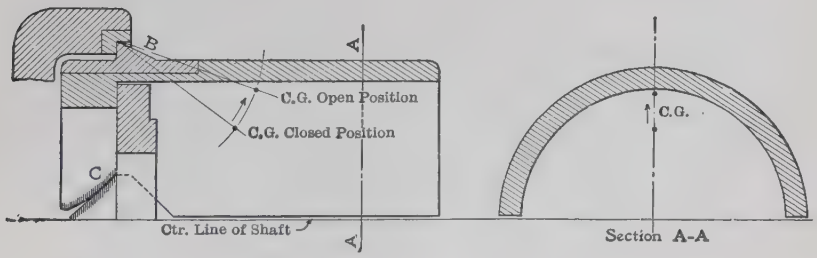

FIG. 151. Section of Kerr Governor Weights and Mounting.

their mounting is illustrated in **Fig. 151.** The weights are supported at three points. The hardened knife-edge at **B** is straight, and of sufficient width for the stresses on it. At 90 degrees on each side is a rolling contact at **C.** The curve at this point is such that the bearing between the weight and the cam collar is always on the line of centers. Pure rolling contact is thus secured, and the weight, without being fastened in position, is firmly driven by its triangular * support. The outward movement of the weights compresses the governor spring and oper-

* The triangular or 3-point support is on **B** and on the two rolling surfaces at **C** on each side of **B.**

ates, through lever connections, a balanced piston valve controlling the flow of steam.

Fig. 152 shows a Rateau type of turbine as now made by the Kerr Turbine Co. Because of the simplicity of the design these turbines are particularly suitable for "isolated" lighting plants. These are sometimes provided with gears.

Terry Steam Turbine. Like the Sturtevant turbine, the one invented by Mr. Edward C. Terry belongs to the Pelton impulse type in which there are two or more **velocity stages.** Stationary reversing buckets are arranged in groups — one for each nozzle —

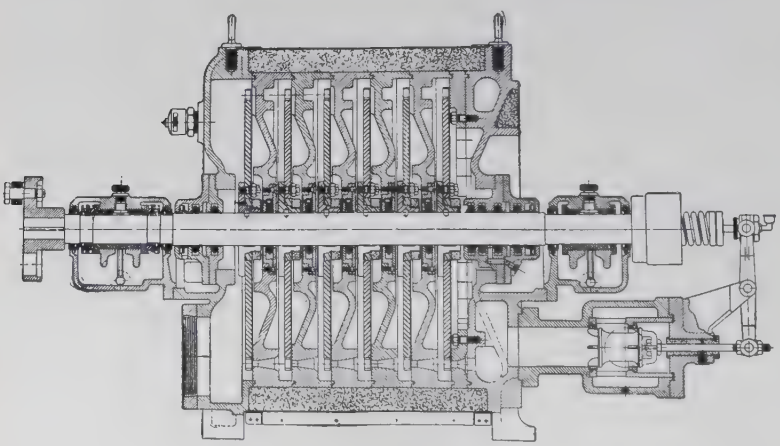

FIG. 152. A 100-Kilowatt Kerr Turbine.

around the interior of the casing. These bucket groups are shown in **Fig. 153,** where a Terry turbine is shown with the upper half of the casing raised for inspection. In this illustration there are four stationary buckets for each nozzle. Obviously the steam is returned to the moving buckets as many times as there are stationary buckets in each group. These stationary buckets are made of gun metal, and each has a crescent-shaped hole at the center through which the steam **partially exhausts.** There is, therefore, apparently considerable expansion in the moving

blades. A valve is provided for each nozzle, so that when it is desired some of them can be closed. Speeds of these turbines

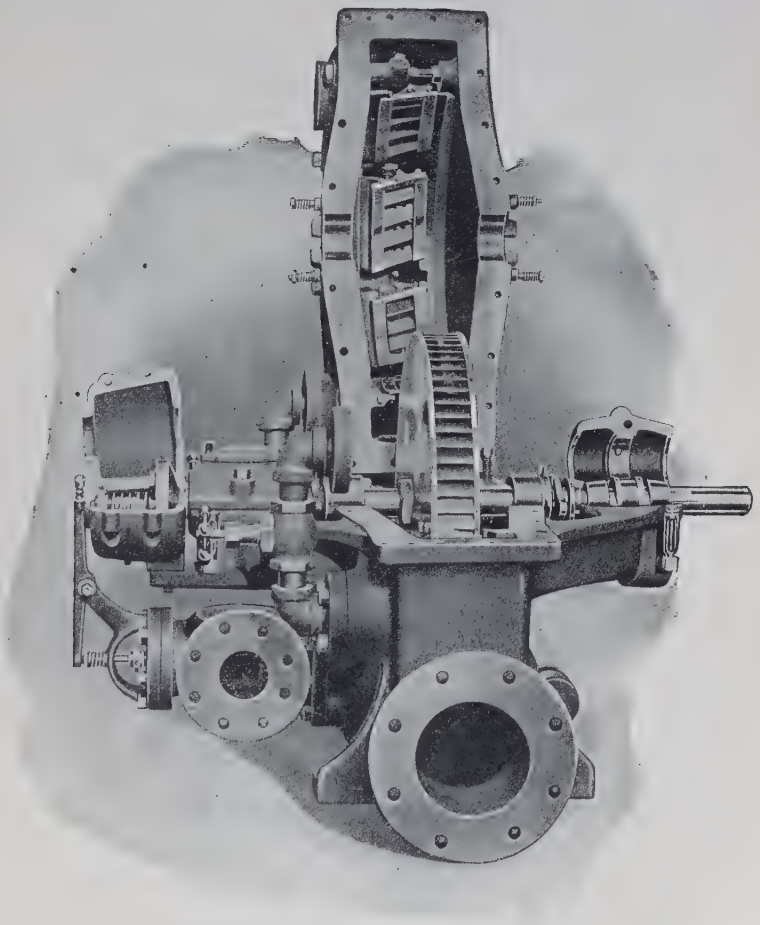

FIG. 153. Terry Turbine with the Casing Raised.

vary from 2500 for a 10-horsepower size to 1600 for 300-horsepower.

Fig. 154 is an illustration of a Terry turbine direct-connected to a five-stage high-pressure turbine pump.

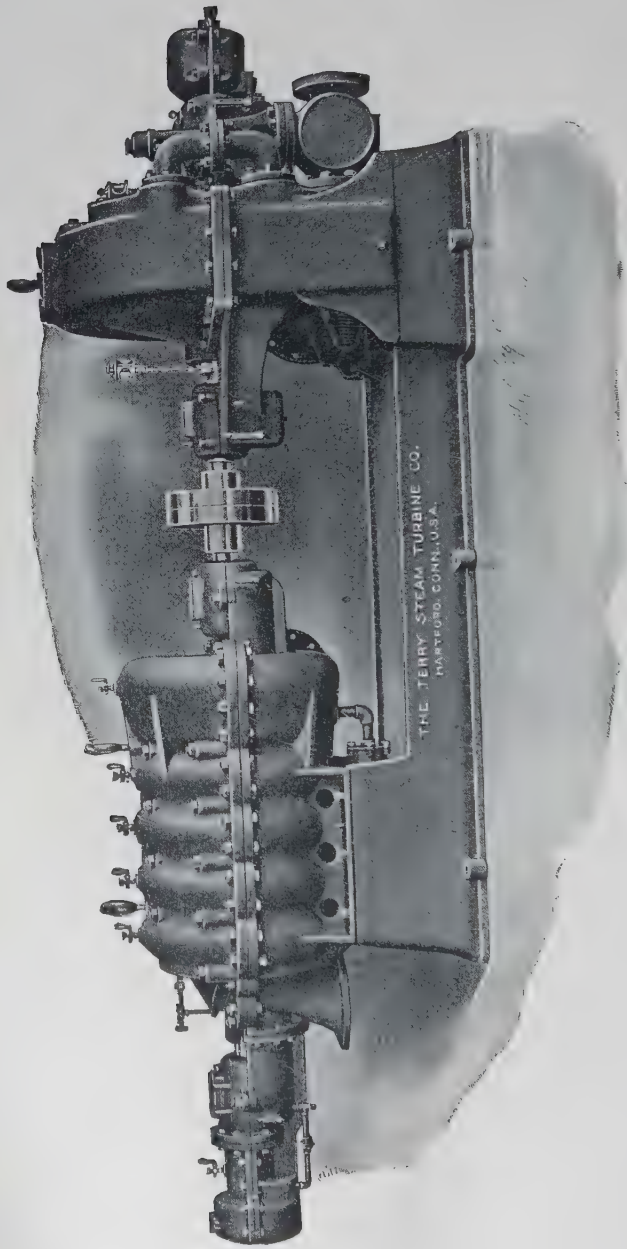

FIG. 154. Terry Turbine Connected to a Five-Stage Centrifugal Pump.

Dake Steam Turbine. This turbine has stepped buckets, but the nozzles do not discharge radially. Stationary and moving buckets, with a section of the bucket wheel, are shown in **Fig. 155.**

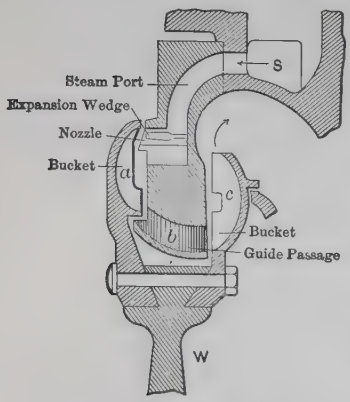

FIG. 155. Steam Passages in a Dake Turbine.

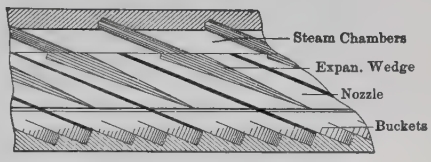

FIG. 156. Diagram of Nozzles and Buckets of a Dake Turbine Showing Expansion Wedges.

This arrangement is unique in that the steam **passes through** the stationary buckets **b** in an axial direction, and is deflected radially by the two sets of buckets **a** and **c** on the wheel. Steam enters the nozzles from the steam chest **S.** Relative positions of nozzles and buckets are illustrated diagrammatically in **Fig. 156.** Actually in the turbine the horizontal lines in this figure are, of course, arcs of circles. The "steps" shown here in the wall of the bucket ring are intended to bring the surfaces upon which the steam impinges nearer to the nozzles and to present always approximately the same angle to the flow of steam.

The nozzles are designed with the object of delivering the steam to the buckets in parallel jets. Throughout their lengths the nozzle walls are the same distance apart, and expansion is secured by the use of **" expansion wedges,"** shown plainly in both figures, which are set centrally in the nozzles. These wedges can be readily removed and replaced, so that it is not difficult to insert a wedge properly proportioned to give the best expansion for a given steam pressure.

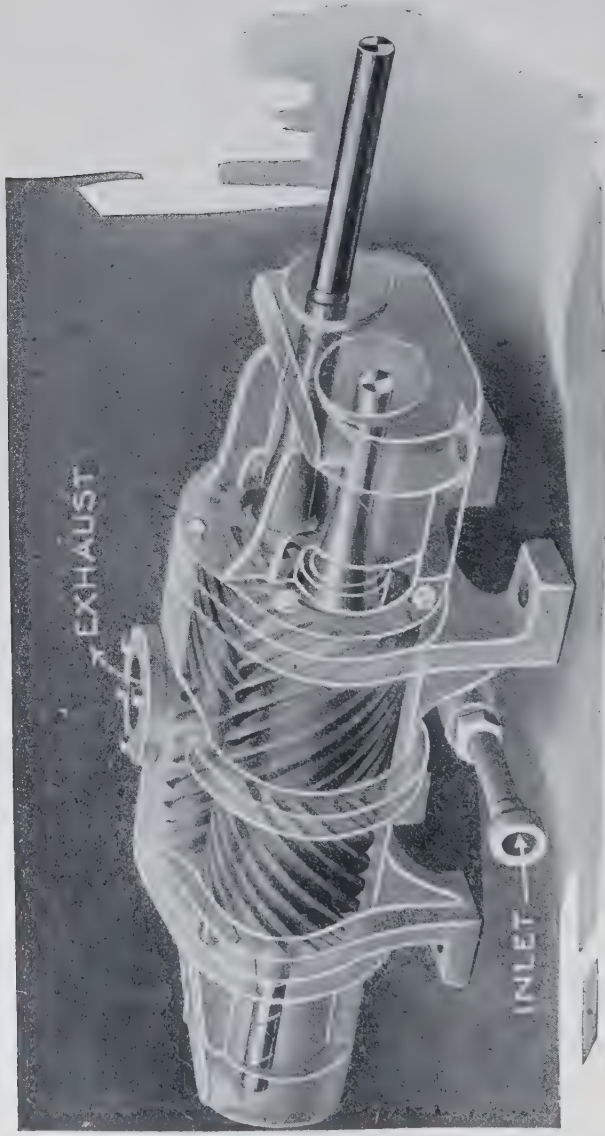

FIG. 157. Phantom View of Spiro Turbine (Rotary Engine).

SPIRO TURBINES.*

The Spiro turbine (**Fig. 157**) consists simply of two herringbone gear wheels which mesh together and revolve in a close-fitting casing. Steam enters at the inlet pipe at the bottom and passes around the gears in its expansion to the exhaust pipe at the top. Steam discharges from the inlet pipe through the small holes, equivalent to non-expanding nozzles shown in **Figs. 158** and **159**, into the " pockets " or spaces between adjacent gear teeth. As

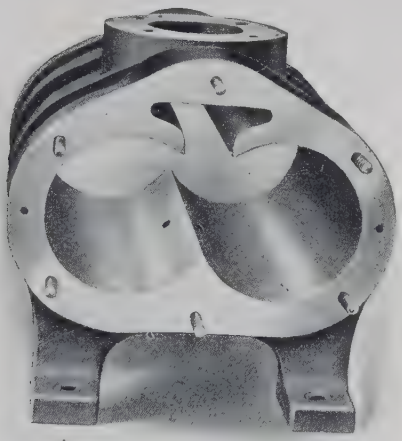

FIG. 158. The Spiro Casing or Cylinder. The two holes near the central rib inside the cylinder are the steam nozzles.

the rotors revolve the " tooth-space " occupied by the steam increases in length as the steam expands. Finally the steam escapes when the outer ends of the teeth pass the line of contact between the two rotors. The increased length of this " tooth-space " from the time the steam is admitted until it is exhausted is shown in **Fig. 160**, by the comparison of the length of the tooth-grooves at " **A** " with the length of the outer white lines. By having the steam inlet at the bottom the weight of the rotors is partly carried by the steam pressure and friction is much reduced below what it would be if the inlet were at the top.

* It is generally understood that a steam turbine is a machine for transforming the *velocity* of steam into work. The Spiro turbine operates only by the *expansion* of steam, and is therefore more correctly a rotary engine.

Spiro turbines are suitable only for non-condensing operation and find application usually for driving the auxiliaries like blowers and pumps in a power plant or in office buildings where the exhaust steam is passed through feed-water heaters or is used

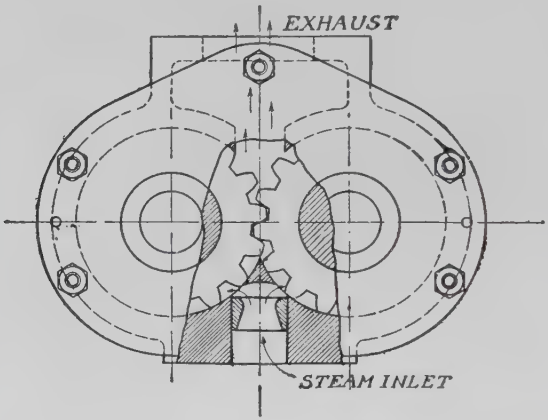

Fig. 159. Section of Spiro Cylinder and Rotors at Mid-length.

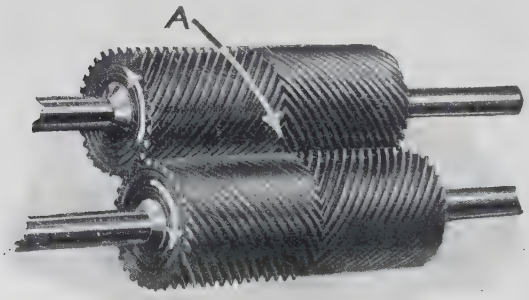

Fig. 160. The Rotors.

for heating buildings. Under these conditions low steam consumption, as would be obtainable with condensing operation, is unimportant. Sufficient expansion for condensing operation is impracticable with this type of turbine. Compactness is also an important feature. The casing of such a turbine is alone no

larger than the cylinder of a good high-speed engine of the same capacity and is even smaller than comparable commercial sizes of electric motors. Governing is accomplished by **throttling** the steam pressure by a method similar to that used for nearly all steam turbines of relatively small size (less than 100 horsepower).

CHAPTER VIII.

GOVERNING STEAM TURBINES.

METHODS of governing steam turbines, or, in other words, of regulating the supply of steam to suit the load on the machine, may be classified as follows:

1. Throttling or partly closing the steam admission valve.
2. Varying the cross-section of the steam passages by "cutting out nozzles."
3. Varying the time of admission, or "blast" governing.
4. Admitting steam at boiler pressure at various points along the direction of steam flow, or "by-pass" governing.

When the steam admission of a turbine is partly closed, the amount of steam passing through the valve ports is, of course, reduced; but at the same time the steam is throttled, meaning that the pressure is reduced without changing the heat contents in a unit weight. Although in this throttling process the total heat in a pound of steam remains unchanged, the energy available from expansion is considerably reduced. If steam at 165 pounds per square inch absolute pressure which contained initially 2 per cent. moisture is throttled without loss of heat, that is, without doing work, to 25 pounds per square inch absolute, the steam at this lower pressure will have 40 degrees F. of superheat. Now if the available energy is calculated for adiabatic expansion from this lower pressure and 40 degrees F. superheat to 1 pound absolute, it is found to be 207 B.T.U. The available energy for adiabatic expansion of steam at the initial condition before throttling (containing 2 per cent. moisture) to the same final pressure is, on the other hand, 316 B.T.U.*

* Although the moisture is removed and the steam is superheated there is no gain to offset the loss in available energy except that the disk and blade rotation losses are reduced; but the gain from this cause could not probably exceed 10 per cent. "Drying" action then is not very important, and it will have very little influence in remedying large losses due to throttling.

In this extreme case of throttling, the available energy of the steam is reduced about 35 per cent. and consequently, for the same work, approximately 35 per cent. more steam is needed with throttling valves than if the steam could be used at light loads without throttling. It is not unusual for turbines governed by throttling to take steam at full load at 135 pounds pressure when the steam supplied is at 165 pounds. Then the maximum pressure becomes available only on overload just before the stage valves open. Efficiency of an expanding nozzle is considerably reduced when it is used with pressures very much different from that for which it was designed, as shown by the curve in Fig. 28. Blade efficiencies are similarly reduced when the available energies and consequently the velocities are not those for which the blades were designed. **Fig. 161** shows very

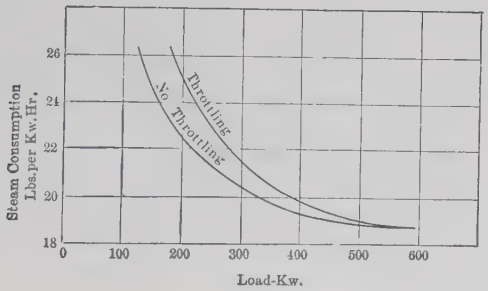

FIG. 161. Effect of Throttling on Steam Consumption.

plainly the effect of throttling on the economy of steam turbines. The two curves in this figure show the steam consumption per electrical kilowatt for a 600-kilowatt turbine when operating (1) with a throttling governor, and (2) with a governor varying the steam supply by changing the **area** of the steam passages, that is, governing without appreciable throttling. In spite of these defects, however, governing by throttling has been fairly satisfactory.

In the De Laval, Rateau, and Zoelly turbines governing is effected by throttling devices. For most turbines, the governor itself is similar to centrifugal governors used in reciprocating engine practice.

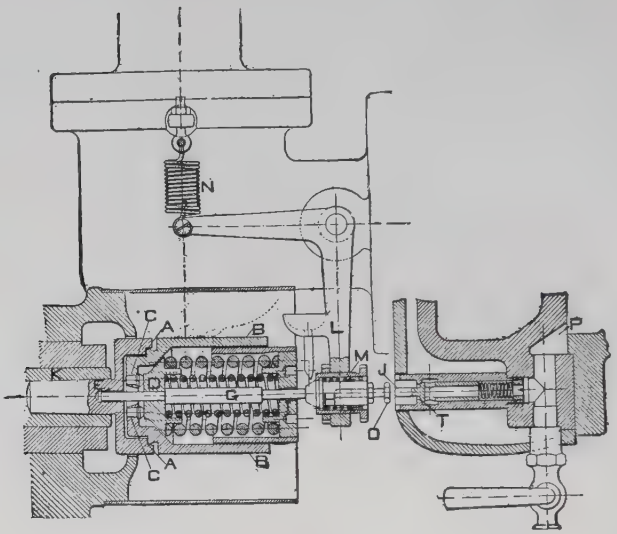

FIG. 162. De Laval Governor and Vacuum Valve.

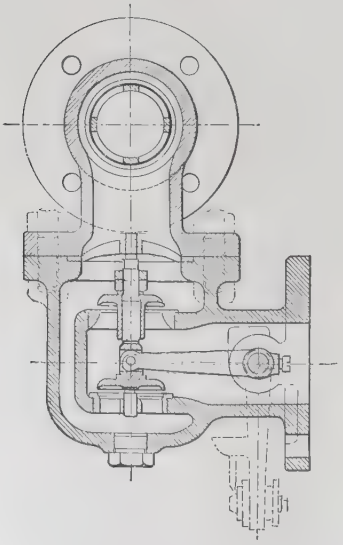

FIG. 163. Section of the Main Admission Valve of a De Laval Turbine.

Fig. 162 shows cross-sections of a typical De Laval governor. It consists of two half cylinders **B, B** which are pivoted in a short outer casing by the knife-edge **A**. Inside the casing these cylinders are fitted with pins **C, C** which press on a collar **D** when the other ends of these cylinders (at **B**) are thrown out, or tend to separate, by centrifugal force. The pressure on the collar **D** transmitted by the pins compresses the springs and forces a central spindle **G** toward the right, which moves with it the bell-crank **L**. This bell-crank moves a short shaft which passes through the steam pipe and has attached to its other end by means of a set-screw a lever (shown in the **section of the valve, Fig. 163**) operating the main admission valve. The weight of the valve and levers is balanced by the small spring **N**. The bell-crank **L** has a certain "play" in **M** which is adjusted to make the governor not too sensitive to momentary changes in speed. The valve travel is only about one-eighth of an inch from the closed to the wide open position.

The governor frame is supported on a tapering rod **E** which is fitted into the end of the main turbine shaft **K**.

With condensing De Laval turbines a vacuum valve **T** is arranged in connection with the governor to act as an emergency stop valve. In case the turbine exceeds the allowable speed limit due to the failure of the main admission valve to operate properly, the **vacuum valve** admits air to the turbine exhaust pipe through the passage **P**. The steam consumption when operating non-condensing is so much greater than when condensing that it is said to be impossible to exceed the rated speed when exhausting into the atmosphere, with all the nozzles and the main admission valve open.

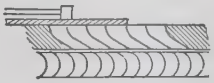

FIG. 164. A Slide Valve Arrangement for a Turbine.

Governing by "Cutting Out Nozzles." One of the simplest forms of governing is represented in **Fig. 164** showing a plain

slide valve arrangement for regulating the flow of steam through a series of nozzles. This is one of the best systems that can be employed for an impulse turbine if an elaborate valve gear is to be avoided.

As the full initial pressure is always maintained in all the nozzles that are open, there can be very little throttling except when the valve is in a position so that one of the nozzles is partly covered. The loss, however, due to this amount of throttling is practically negligible for other than very light loads. Valve gears have been designed to improve on this slide valve method by providing a separate valve (usually of the poppet type) for each nozzle or, at most, for a small group of nozzles. These valves are opened and closed suddenly by the governing apparatus by the use of either springs or dash-pots, very much as with our modern Corliss valve gears for reciprocating engines. The difficulty with this last method is, however, that there will be abrupt, although perhaps small, variations in speed every time a valve opens or closes, unless special precautions are taken in the design. If the service is for electric lighting, speed irregularities due to such governing may be sufficient to produce a flicker in the lights.

In turbines with more than one pressure stage, as, for example, in the Curtis and Rateau types, it has often been proposed to control the admission to each stage. Apparently the only objection to such a scheme would be in the very complicated valve gear that would be needed; but, contrary to what one might expect, it can be shown by tests and demonstrated mathematically that such an arrangement would not give as good economy as if only the first stage is controlled.

The only advantage resulting from this method of controlling the steam supply is that by making the light load pressures more nearly in the same proportion to each other as for full load and overload, the stresses in the diaphragms separating the stages are more nearly the same as calculated in the original design. There is probably no commercial type of turbine using such a complicated method of governing except for large overloads, when economy is not of importance and the conditions are more of emergency

than of continuous operation. Governors for the larger sizes of the Curtis turbines show the merits of this method to the best advantage. By governing in this way it is possible to vary the number of valves supplying steam to the turbine in proportion to the size of the load, thus maintaining a constant initial pressure and therefore constant velocity in the nozzles and blades. In a single stage turbine there is no difficulty in applying this method, and consequently the energy and velocity are always those suited for the best nozzle and blade efficiency. Usually in a turbine of several stages no attempt is made to regulate the number of nozzles after the first stage, on account of the mechanical difficulties inseparable from a complicated valve gear. In order to secure a correct energy and velocity distribution throughout the turbine, the nozzles in all the different stages should, of course, be changed in the same ratio. This scheme is not impossible and has been attempted in some German designs. With turbines like the Rateau and Parsons, where the drop of pressure is very small in each stage, and where there are, therefore, a great many stages, any method of cutting out some of the steam passages to reduce the area at light loads is impracticable.

Types of governors to be used depend a great deal on the capacity and the kind of service. The smaller sizes have usually simple forms, while the larger ones are necessarily more complicated. On the small turbines, where an elaborate valve gear is not desirable, the valves are moved by the direct action of the centrifugal force of the governor **weights.** This is called **direct** governing, to distinguish it from the "relay" system used by most turbine manufacturers for large machines. By the direct method a comparatively large centrifugal force is necessary to move the valves; and unless they are carefully balanced it is difficult to make the governor sensitive to fluctuations in the load. Besides, if for any reason a valve sticks, there may be wide variations in speed.

By the **indirect** or what is commonly called the "relay" method the centrifugal force of the governor is needed only to

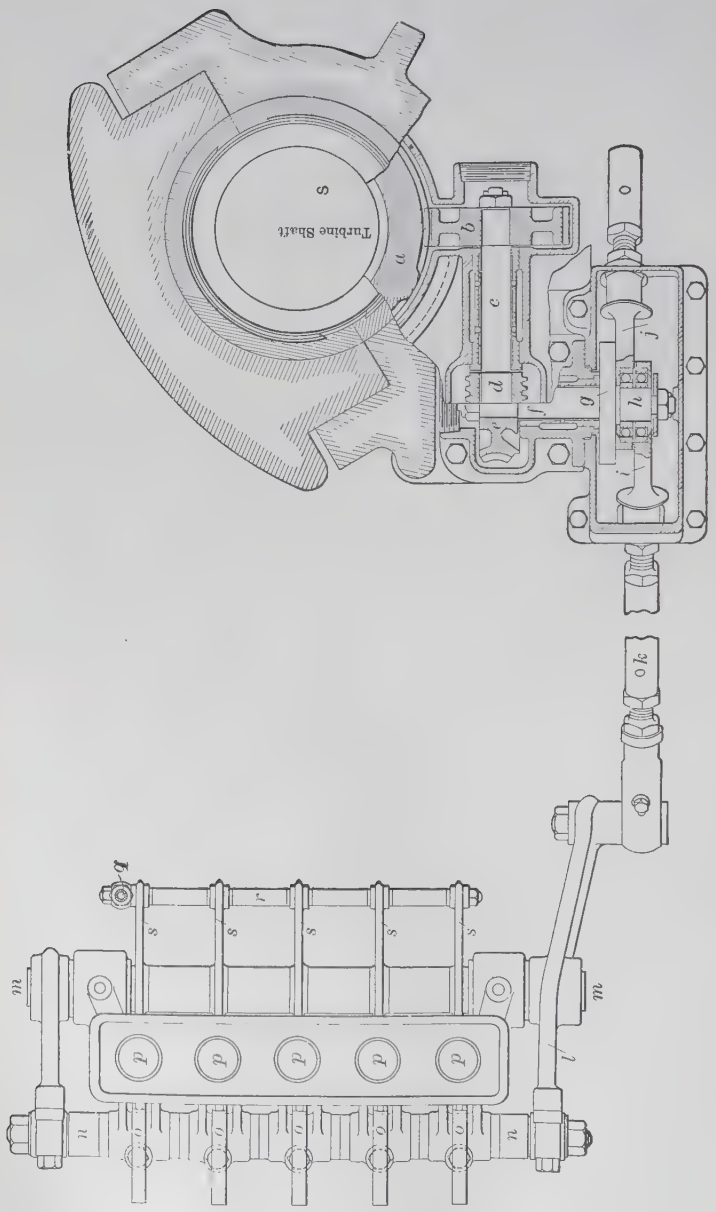

FIG. 165. Rice's Mechanical Valve Gear (Top View).

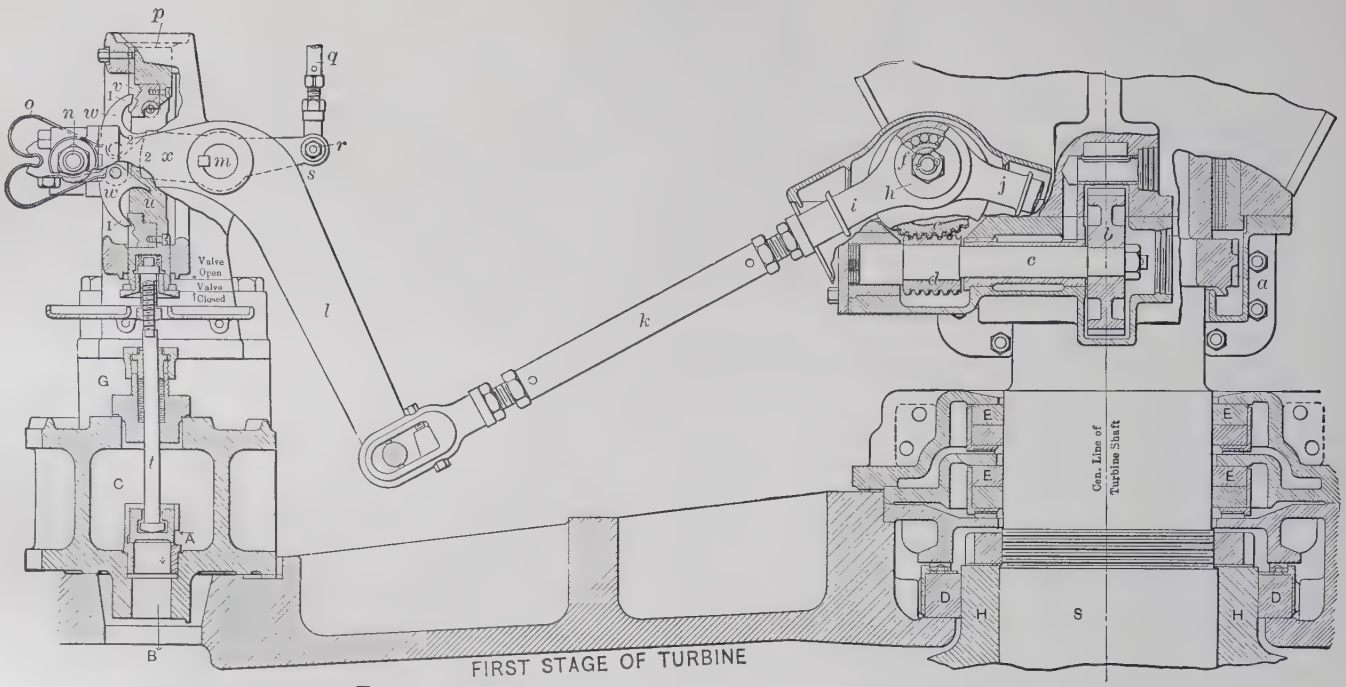

FIG. 166. Cross-section (elevation) of Rice's Mechanical Valve Gear.

"give the signal," as we may say, which sets in motion an auxiliary mechanism by which the valves are moved by gearing connected to the main shaft or by steam or hydraulic pressure. In Curtis turbines of all sizes up to 500 kilowatts the valves are operated mechanically, and for larger sizes a hydraulic apparatus is used.

Electromagnetic Control of Valves. Formerly, in large Curtis turbines, the valves opening the nozzles were operated by the pressure of steam admitted through a port opened and closed by a "pilot" valve controlled by electromagnets. The governor was connected to a very simple mechanism for the purpose of making and breaking the current through the electromagnets, which, in turn, moved the "pilot" valves operating the main valves on the turbine.

Mechanical Valve Control. One of the recent developments in the valve gears for large turbines governed by cutting out nozzles is the successful replacing of the electromagnetic "relay" outfit formerly used on Curtis turbines by a positive mechanical valve gear, due to Mr. Richard H. Rice.

This valve mechanism is well illustrated in **Figs. 165** and **166,** where it is shown applied for regulating the steam admission to the first stage of an impulse turbine. Steam in the steam chest **C** is maintained constant at the pressure for which the turbine was designed, and the valves are operated so that they are always wide open or else tightly closed. When the valve rod **t,** Fig. 166, is raised steam is admitted through the port **A,** from which it passes into a nozzle plate (like Fig. 114) at **B** to be discharged at high velocity into the blades of the first stage.

The valve gear consists essentially, besides the worm gears shown at the right-hand side of the figures, of a connecting rod moving a bell-crank **l,** to which two dogs or "catches," **w, w,** are attached by pins. The extreme ends of these dogs, marked **r** will engage with the teeth on the steel plates **u** and **v.** An eccentric, **h** (Fig. 165), gives the connecting rod **k** a reciprocating motion which, being transmitted to **l,** moves the dogs **w, w** up and down. In Fig. 166 the lower dog is shown sliding on

the plate **u**, and in its lowest position it touches the tooth on this plate. The upper dog is kept out of contact with the tooth on the plate **v** by the lever **x**, which by engaging with the lower end of this dog, marked **2** in the figure, raises the end **1** out of reach of the tooth. The letters **x** and **s** are at opposite ends of the same lever supported on the shaft **m**. In the top view of this valve gear shown in Fig. 165 there are five valves operated by the connecting rod **k**. On the same eccentric, **h**, there is also another similar connecting rod, **j**, operating five valves on the opposite side of the turbine. The steam supply of the turbine is therefore regulated by ten valves.

The position of the end of the lever at **x** is regulated by means of the rod **q**, which is connected to the Curtis governor illustrated in **Fig. 167**. Speed regulation by means of this governor is accomplished by the balance maintained between the centrifugal effort of moving weights and the static forces exerted by springs. The governor is keyed to the main turbine shaft at **S** and, of course, rotates with it. It is protected on two sides by a stationary looped casing, of which a section is shown at the top of the figure. In the order of action of this governor the weights **A** fly out on account of centrifugal force, moving on knife-edges near their largest diameter, and pull down the governor rod **C** by the pressure exerted on other smaller knife-edges **B**. The governor rod is pulled down against the action of the heavy spring **D**. At **E** a ball-bearing gimbel joint, thoroughly lubricated, forms a junction point between the revolving shaft of the turbine and the stationary lever of the governor (shown in the figure extending toward the right, nearly horizontally).* This stationary lever is connected by means of a bell-crank to the rod **q** (Fig. 166) and thus determines the position of the lever **x**.

To illustrate the action of this valve gear and the governor, assume the load on the turbine has been increased and the speed

* Connected to the stationary lever of the governor is an auxiliary spring *F* for varying the speed when synchronizing. By means of a small motor *G* the tension of this spring can be adjusted from the switchboard.

has dropped a little, indicating that more steam is needed and that the valves have been so arranged * that the one shown in Fig. 166 is the next to be opened. With a reduced speed the governor weights **A** (Fig. 167) will move in slightly toward the center, reducing the tension on the governor spring **D**, so that

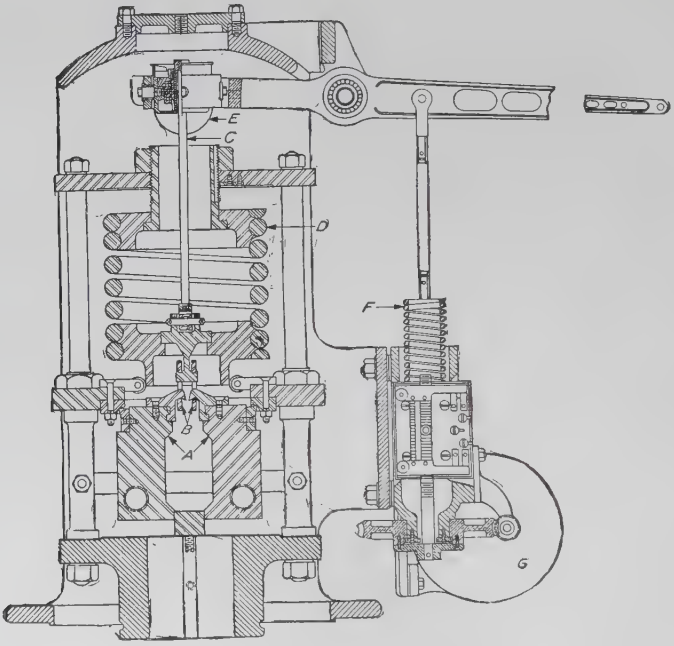

FIG. 167. Sectional View of Curtis Governor.

the rod **C** and the left-hand end of the stationary governor lever are **raised.** By means of an auxiliary lever and a bell-crank the rod **q** is **raised** and the end **x** of the lever attached to it is lowered to **engage the catch 2 of the lower dog w, releasing** at the same time **the upper dog,** which now comes into contact with the tooth in the plate **v,** raises the valve rod **t,** and admits steam through the port **A.** When again the speed becomes too high the rod **q** is lowered, **x** is raised, and the lower dog closes the valve. The

* Each of the levers *c* controlling the dogs is set at a little different angle to the horizontal. The lever which has its end (*x*) lowest will open its valve first.

dogs are held in position when not in contact with the lever **x** by the flat springs **o.**

The eccentric **h** is moved by means of gears connected to the main turbine shaft **S.** A ring on this shaft has a single tooth **a,** which engages with a gear wheel **b,** on the shaft **c,** which by means of worm gearing is connected with another horizontal shaft **f,** and thus moves the eccentric **h.** The hub of a turbine wheel is shown at **H** (Fig. 166), and carbon packing rings to prevent the leakage of steam from the first stage are illustrated by **D** and **E.** The speed reduction is designed sometimes for one worm gear instead of two as shown here. This is equivalent to putting the eccentric **h** directly on the shaft **c.**

Hydraulic Motor Control of Valves. The hydraulic governing device used in the designs of Curtis turbines of the 500 to 9000 kilowatts sizes is illustrated in the following figures. The movement of the horizontal governor lever shown in **Fig. 167** is transmitted through the rod **D** (**Fig. 168**) to a second lever arm **C** operating the pilot valve **P** of the oil cylinder **B.** The piston **A** operates the main power arm of the mechanism, which transmits the motion either by a rack connecting with a pinion, or by means of cranks, to the " side " rod, shown in **Fig. 169,** carrying the cams for operating the valves. These cams act directly on the valves, opening and closing them according to the demands of the load. Because this device has a very slow motion it has the advantage of being practically independent of lubrication for its successful operation.*

Governing by Varying the Time of Admission. Governing by periodic admission or by " blasts " was invented by Parsons and has been applied to practically all types of steam turbines using his name. In its ideal form steam is admitted to the turbine by a poppet valve in puffs or blasts in periods of long or short duration depending on the demands of the load. The method is explained usually by saying that there are alternate periods when the turbine casing is either filled with steam or there is no

* This pilot valve admits oil under pressure through the passages at ends of the "chest," and discharges oil through the exhaust port at the middle. The fluid being always under pressure makes movement slow and the amount of movement is proportional to the position of the pilot.

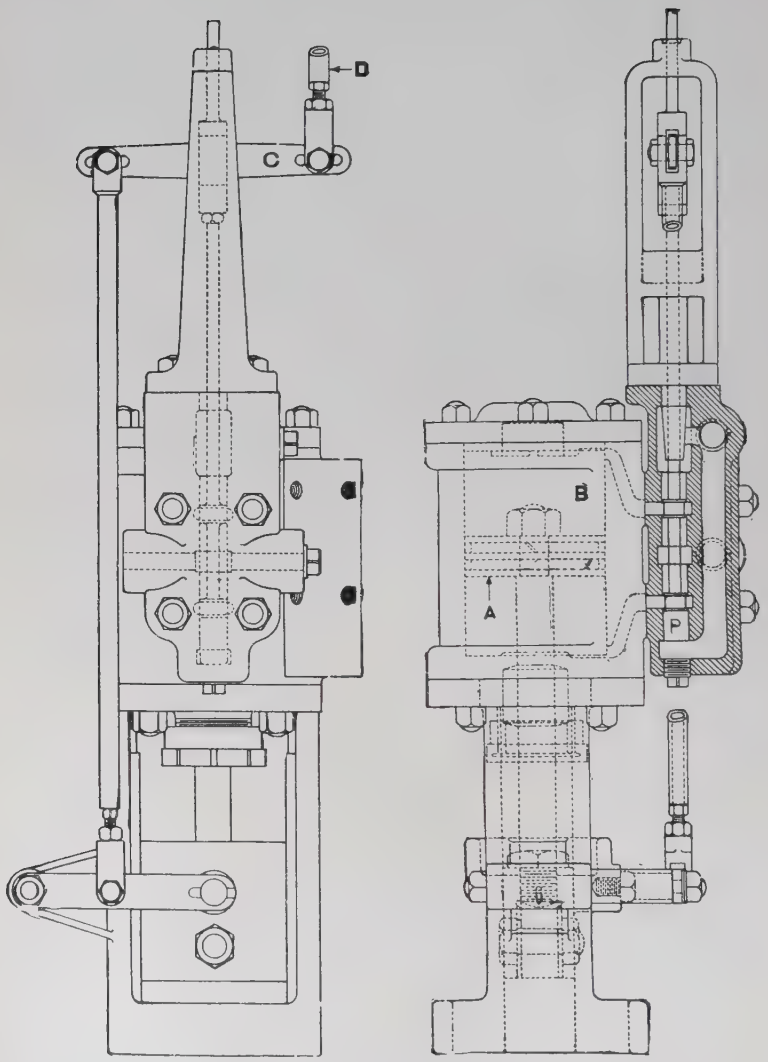

FIG. 168. The Hydraulic Operating Mechanism for Valves of a Curtis Turbine.

steam at all. At light loads the valve opens for short periods, remaining closed the greater part of the time. When the load increases the valve remains open longer, and at about full load

there is full pressure in the high-pressure blades, the valve merely vibrating without sensibly affecting the pressure of the steam in the passages. It is thought that in this way the full benefit of high-pressure steam can be secured at all loads. This is the ideal condition, but practical considerations greatly modify it.

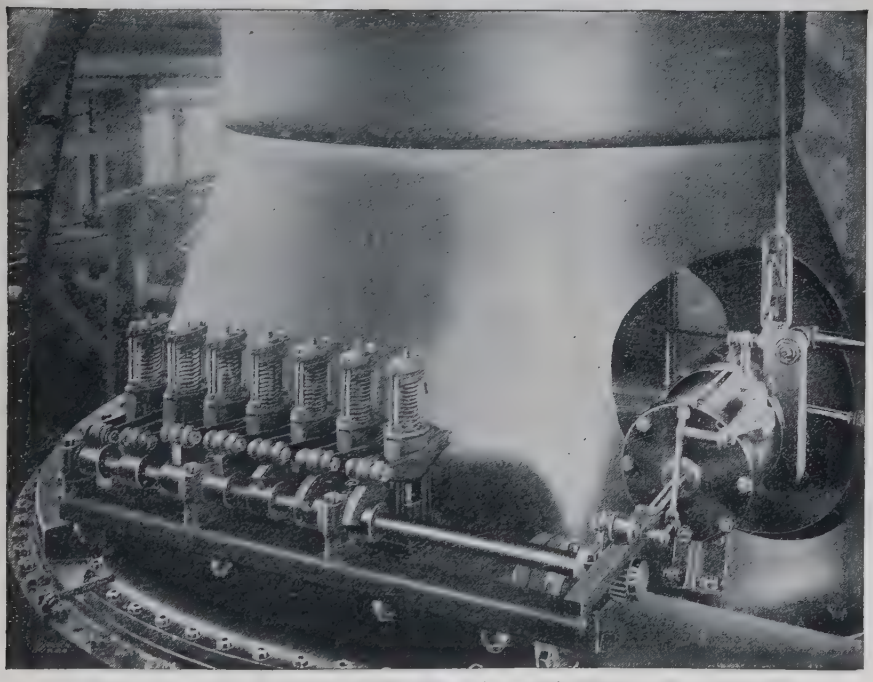

FIG. 169. One of the Two Valve Sets of a Curtis Turbine Showing the Hydraulic Controlling Cylinder and the Valve "Side" Rod.

Governor for Curtis Poppet Valve Gear. The operating governor (**Fig. 170a**) is of the inertia type, mounted on the upper end of the vertical shaft which drives the gear pump. The combined rotary and vertical motion of the governor link is transformed into vertical motion by a ball bearing transmission. The cut shows the governor in its casing with the lid cut away to show the working parts.

The motive power of the governor depends on the unbalanced force due to the inertia and centrifugal effect of the two weights (18) pivoted on ball bearings (17) opposed by the tension of a

helical spring (3) which connects the two weights (18) through plugs (8), bolts (13) and knife edges (12) which bear on the knife edge seats (11) in the weights. The center of gravity of the

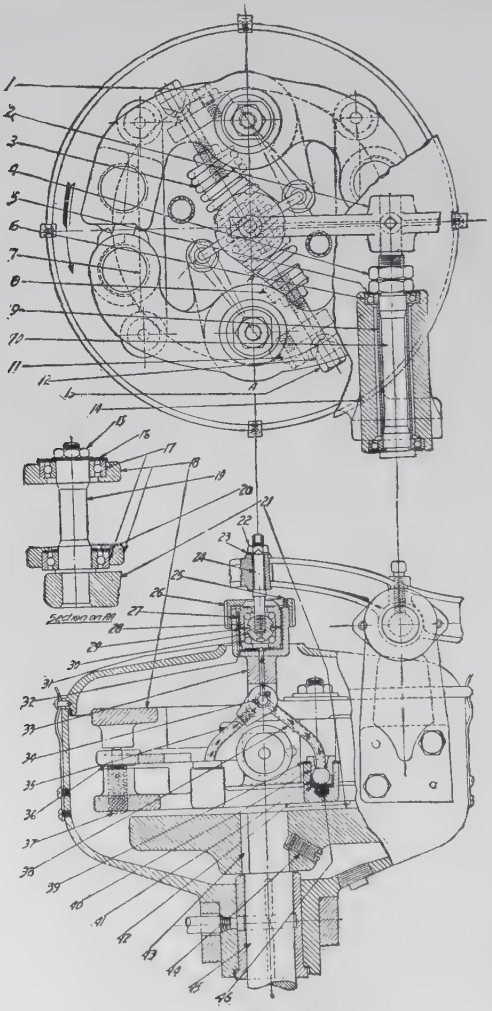

Fig. 170a. Governor for Curtis Poppet Valve Gear.

weights is inside the radius of the point of support and in advance of it with respect to rotation, thus decreasing the tendency to "jump" on quick changes of load and increasing its steadiness.

The bolts (13) can be screwed in and out of the plug for the purpose of obtaining different tension adjustments on the spring and are checked with lock nuts. The governor body is fastened to its shaft by a key and set screw, the latter being accessible through a hole in the governor casing.

The governor is permanently adjusted before leaving the factory. The connecting rod is trammed at both ends and all lock nuts locked with check washers.

The speed regulation is changed as follows: In order to lower or raise the speed without materially affecting the variation of regulation, add or subtract weight. Changing the spring tension affects the regulation, narrowing upon increasing and broadening upon decreasing tension. The change of speed in either case is about twice as rapid at the lower end of the travel as at the upper. The regulation can be further broadened by screwing the plugs into the spring and narrowed by unscrewing them, but this method should be resorted to only when the other two methods prove insufficient.

By comparing the desired regulation with the actual, and applying the above methods in proper proportions, any desired regulation within the limit of design can be obtained. To illustrate, assume the regulation to be high and narrow; in order to broaden, put in weight and slacken the tension on the spring at the same time. Should the regulation be high and broad, enough weight must be put in to bring the speed below normal and the speed raised again by increasing spring tension, etc. The method of adjusting length of the rods and levers leading from the governor to the valve mechanism is comparatively simple.

Curtis Poppet Valve Mechanism. The mechanism for operating the valve (**Fig. 170b**) consists of a chamber which includes the piston (33) and pilot valve (25); a controlling chamber or steam chest which includes the various valves (5) and valve centers (4); and finally the connections tying the governor to the operating and controlling chambers. In detail the operating cylinder carries piston (33) with its piston rings (28). The piston is securely fastened to piston rod (32) which in turn is tied through coupling (37) to connection rod (38). The pilot valve

(25) and its bushing (26) is carried in an extension of the operating chamber.

The controlling chamber or steam chest carries the valve stem (18) on which are mounted either four or five valve centers. **Fig. 170b** shows four valve centers, designed successively to raise

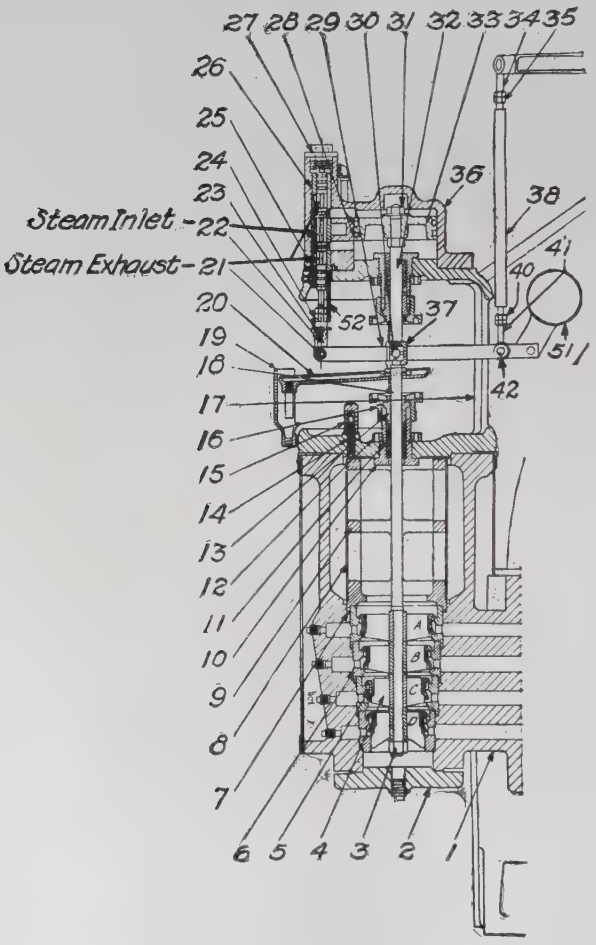

FIG. 170b. Curtis Poppet Valve Gear.

the various valves (5) with upward travel of the piston (33). The valves are of the poppet type, annular in shape, free to move but guided and controlled by the valve centers. The

valves together with the valve seats (6) are faced with a special valve metal. Leakage along the valve seats is prevented by the asbestos gaskets (7). The locking screw (14) acting on the steam strainer cage (9) holds the valve seats in place.

Steam is admitted to the steam chest through the throttle valve not shown and passes through the strainer screen (8). The opening of the various valves admits steam to the port plate, nozzles and turbine wheels. The operating chamber receives its steam through an opening in the casting connecting with bushing (26) and leading to the steam chamber formed by the pilot valve and its bushing. Ports connect this steam chamber with the piston chamber and steam is admitted to the upper or lower side of the piston, depending on the position of the pilot valve. The valve stem (18) and the piston rod (32) are connected to the governor through the pilot valve lever (29), connecting rod (38) and governor lever.

With turbine and governor at rest and with no steam bled to the pilot valve, the position of the various levers is such that the pilot valve is in a position to admit steam to the under side of the piston for opening the main valves. With the opening of the throttle, the turbine speeds up, the governor transmission moves upward and the levers move in a position to shift the admission of the steam from the under to the upper side of the piston, closing the main valves successively until the governor takes a definite position. The floating lever (29) then fulcrums on the pin (42) and the pilot valve takes a neutral position independent of the governor. Any change in the position of the governor due to a change in load or steam condition or both is immediately transmitted to the floating lever (29) which now fulcrums on the pin (30), and the pilot valve immediately moves to admit steam to the under side of the piston with a drop in speed, and to the upper side of the piston with an increase in speed. Sufficient steam will be admitted to the turbine to maintain a constant speed condition, at which time the governor again takes a definite position.

It will be seen from the above description that throttling is practically eliminated since all but one of the valves are either in the wide open or closed position and the overtravel of the piston

due to the expansive effect of the steam causes the opening and closing of the individual valve a sufficient number of times per minute practically to eliminate its throttling. A dashpot (48) filled with light cylinder oil prevents violent fluctuations.

Brown-Boveri-Parsons Governing Device. The method of regulating the steam supply by intermittent admissions or "blasts" is typical of nearly all the governing devices fitted to Parsons turbines. The design used for the Brown-Boveri-Parsons turbines is illustrated by **Fig. 171.** Steam enters the turbine through a main admission valve **N** which is given a vertically oscillating motion. A small piston mounted above this valve and on the same spindle has steam at the pressure in the main steam pipe on its lower face acting against the pressure of a strong spring on its upper face. An auxiliary valve fitted on the spindle **L** is given an oscillating motion by an eccentric on the governor shaft at **M,** which causes, at every stroke, the small passage at the lower face of the piston to communicate with the exhaust, making the main valve **N** fall upon its seat. The spindle **L** is linked up to a collar sliding on the governor shaft. The height of the governor balls determines the position of this collar. Thus the height of the governor augments or diminishes the amplitude of the oscillations of the auxiliary valve on **L,** and in consequence causes the main valve **N** to open a longer or a shorter time at each admission of steam. The frequency of the steam admissions is about 150 to 250 per minute according to the speed of the turbine.

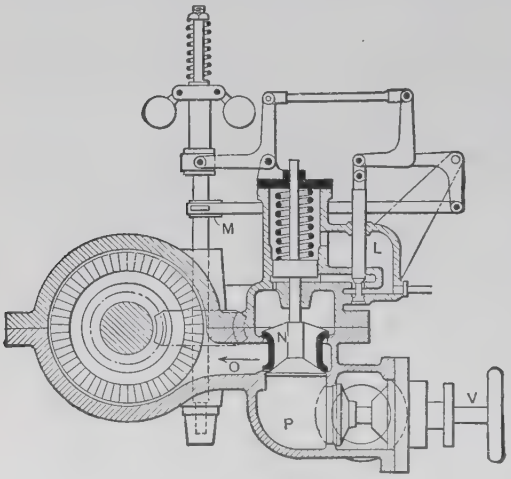

Fig. 171. Brown-Boveri-Parsons Governing Device.

Westinghouse-Parsons Governor and Valve Gear. Diagrammatically, the governor and valve gear of a Westinghouse-Parsons turbine are shown in **Fig. 172.** A small pilot valve, marked **A** in the figure, is actuated directly by the governor by means of levers and links. This pilot valve controls the steam supply of the turbine by regulating the operation of the main poppet admission valve which opens and closes at uniform intervals when the turbine is in operation. Speed variations

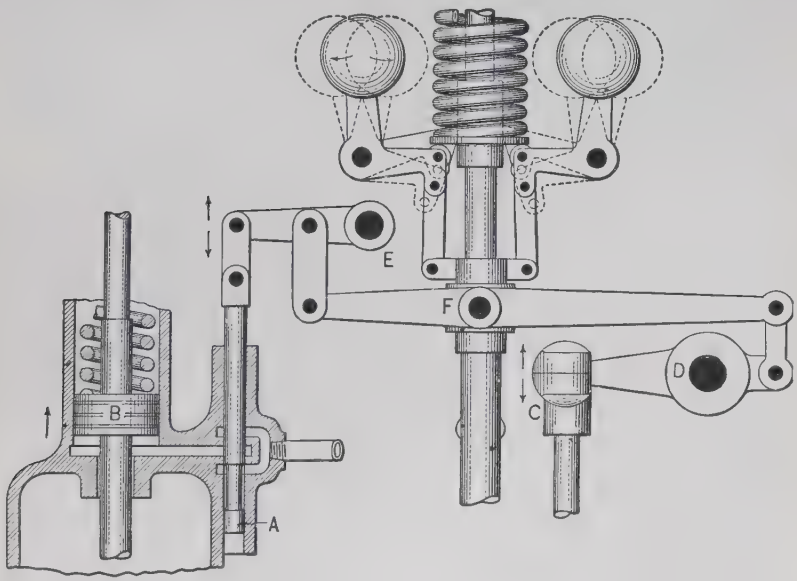

FIG. 172. Diagrammatic Arrangement of the Governing Mechanism of a Westinghouse-Parsons Turbine.

change the height of the governor balls which, in turn, change the position of the collar **F** of the lever on the governor spindle. By means of a system of links this lever varies the throw of the pilot valve relatively to the valve port. This pilot valve controls the main admission valve by means of the auxiliary piston valve **B** in the same way as in the Brown-Boveri design which has already been explained. Reciprocating motion for operating the valve mechanism originates in an eccentric driven by the

turbine from a worm on the main shaft. This eccentric gives an oscillating motion to the levers supported at **D, F,** and **E.**

The governor is of the fly-ball type, the ball levers being mounted on knife-edges instead of pins, to secure sensitiveness. The speed of the turbine may be varied, while running, within the limits of the governor spring by grasping a knurled hand wheel at the top of the governor and bringing the spring and tension nuts to rest. Adjustment of the tension of the spring can then be made. This device is particularly useful for synchronizing the speed of small turbine-alternators operating in parallel, or for distributing the load between them. For synchronizing large Westinghouse turbine-alternator units a small motor controlled from the switchboard is used to adjust the governor spring.

Allis-Chalmers Governor Mechanism. The governing device of the Allis-Chalmers steam turbine is of the Parsons type, using hydraulic instead of steam pressure. The governor is required to operate a small balanced oil relay valve only, while the two steam valves, main and by-pass, are controlled by oil pressures of about 20 pounds per square inch, acting upon a piston of suitable size. The by-pass valve opens when the turbine is required to develop overload or the vacuum fails.

The oil supply to the bearings and to the governor can be interconnected so that the governor will shut off the steam if the oil supply fails.

"Blast" Governing Compared with Throttling. When the main steam admission valve of a Parsons turbine closes there is still some steam in the turbine casing, and this steam expands, of course, to fill the space. The same effect occurs also when the valves are first opened, and the steam rushes into a region of very low pressure. In these two ways low pressures are produced just as with throttling valves, although, for the same average pressure, the loss is not nearly so great. The pressure variation for a 1500-kilowatt Parsons turbine at one-quarter, three-quarter, and full load is shown in **Fig. 173.** At a little overload there is practically no variation because the

steam valve is then closed for shorter periods. Probably the greatest disadvantage from this method of governing results from "initial condensation at light loads." There is usually one blast or puff of steam in every thirty revolutions. Steam admissions are, therefore, far enough apart to allow the interior of the turbine to be cooled by the falling temperature between the blasts. Now when there is a fresh admission the steam comes into contact with the relatively cooler walls of the interior of the

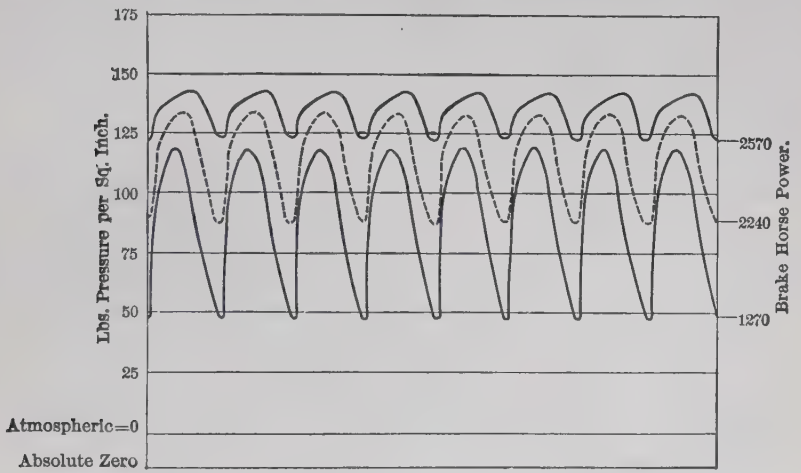

Hodgkinson, F.

FIG. 173. Indicator Cards Showing Initial Pressures in a Parsons Steam Turbine.

turbine, and condensation must take place just as in a reciprocating engine.

If it were possible, practically, the number of "periods" would be made so small that free expansion would be reduced to a minimum; but for a satisfactory speed regulation long periods are not permissible. It appears, therefore, that unless the periodicity can be made low, the economy at light loads is no great improvement on the method of plain throttling. A very important feature of this method, however, should not be overlooked. This is the advantage of having a valve mechanism which is **constantly moving,** precluding the possibility of "sticky" valves.

The time required for the steam entrapped in the casing when the valves are closed to drop in pressure by a given amount can be calculated very simply as follows.

Let

W_1 = weight of steam (pounds) entrapped when the valves are closed,

W = weight of steam (pounds) in the turbine casing after expanding a time t,

W' = weight of steam (pounds) flowing per second when the valves are wide open, that is, when the pressures in the casing are those for which the blading was designed,

P_1 = initial absolute pressure of the steam delivered to the turbine,

P_2 = final absolute pressure after a time t,

and to avoid complex mathematical terms assume that in the expansion in the casing, in general terms,

$$Pv = K,$$

where v is the volume of a pound of steam and K is a constant. Then since v and W are reciprocals,

$$W = P \times \text{constant};$$

then also

$$W' = P_1 \times C,$$

where C is another constant.

In a time dt we have thus

$$dW = CPdt,$$

also

$$W = W_1 \frac{v_1}{v},$$

$$W = \frac{W_1 v_1 P}{K},$$

$$dW = \frac{W_1 v_1}{K} dP;$$

therefore

$$CPdt = \frac{W_1 v_1 \, dP}{K},$$

$$\frac{W_1 v_1 \, dP}{KC \quad P} = dt,$$

$$\frac{W_1 v_1}{KC} \log_e \left(\frac{P_1}{P_2}\right) = t_1 - t_2 = t,$$

$$P_1 v_1 = K \text{ and}$$

$$C = \frac{W'}{P_1},$$

$$t = \frac{W_1}{W'} \log_e \left(\frac{P_1}{P_2}\right).$$

If we take for convenience $W' = 2\frac{1}{4}$ pounds of steam per second, $W_1 = \frac{3}{4}$ pound, and $P_1 = 165$ pounds per square inch absolute pressure, the time required for the average pressure in the casing to fall to 100 pounds is $\frac{3}{4 \times 2.25} \log_e \frac{165}{100} = .159$ seconds. The time required for steam at 165 pounds absolute to fall to various other pressures is shown in **Fig. 174**.

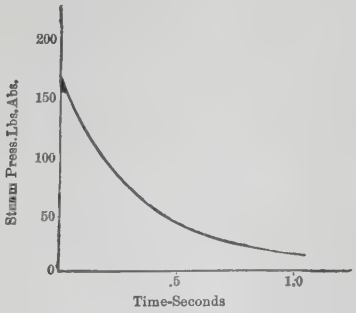

FIG. 174. Time Required for Pressure Variations in the Casing of a Parsons Turbine.

With 165 pounds per square inch absolute initial pressure, usually the no load pressure varies from 25 to 50 pounds absolute,

when, according to the curve, the time required to reach this pressure without throttling is about .4 to .8 second; and as the load is increased correspondingly shorter times.

Governing System of Westinghouse Turbines. The valve control system now used on many Westinghouse turbines of over 1000 kilowatts capacity is shown in **Fig. 174a.** The governor **G** shown at the right-hand side of the figure is driven from the main turbine shaft through a worm (in direction shown by arrow) and simple gears. It controls and operates the primary or main steam admission valve **M** and also the secondary steam valve **N,** shown at the left-hand side of the figure, through intermediary levers, links, and a relay valve **A** operated by oil under pressure. The oil for operating the relay system is taken from the discharge of the turbine oil pump located below the governor, and driven by the vertical shaft **S** shown geared to the bottom of the governor shaft.

To better understand the drawings it should be noted that the oil cylinder **B** with its piston rod **R** are shown in one view in the central part of the figure, and in another view, in a more reduced scale, at the left-hand side of the figure as they are connected for the operation of the primary or main **M** and secondary **N steam** admission valves of the turbine.

High-pressure oil is carried from the oil pump direct to the oil relay, **A,** shown in **Fig. 174a.** According to the position of the oil relay plunger, this oil is **admitted either below or above the operating piston C** in the cylinder **B,** and raises or lowers this piston, which by its movement, closes or opens the steam valves **M** and **N,** and so admits a smaller or larger amount of steam to the turbine. It may be noted that the secondary or overload valve **N** does not come into play until the primary steam valve **M** has practically reached its full opening. This is accomplished by adjusting the height of the lever arm **L** attached to the piston rod **R** in relation to the position of the adjustable screw **O** on top of the secondary valve rod, so that they come into contact for lifting the secondary valve only after the primary valve has reached about its maximum opening.

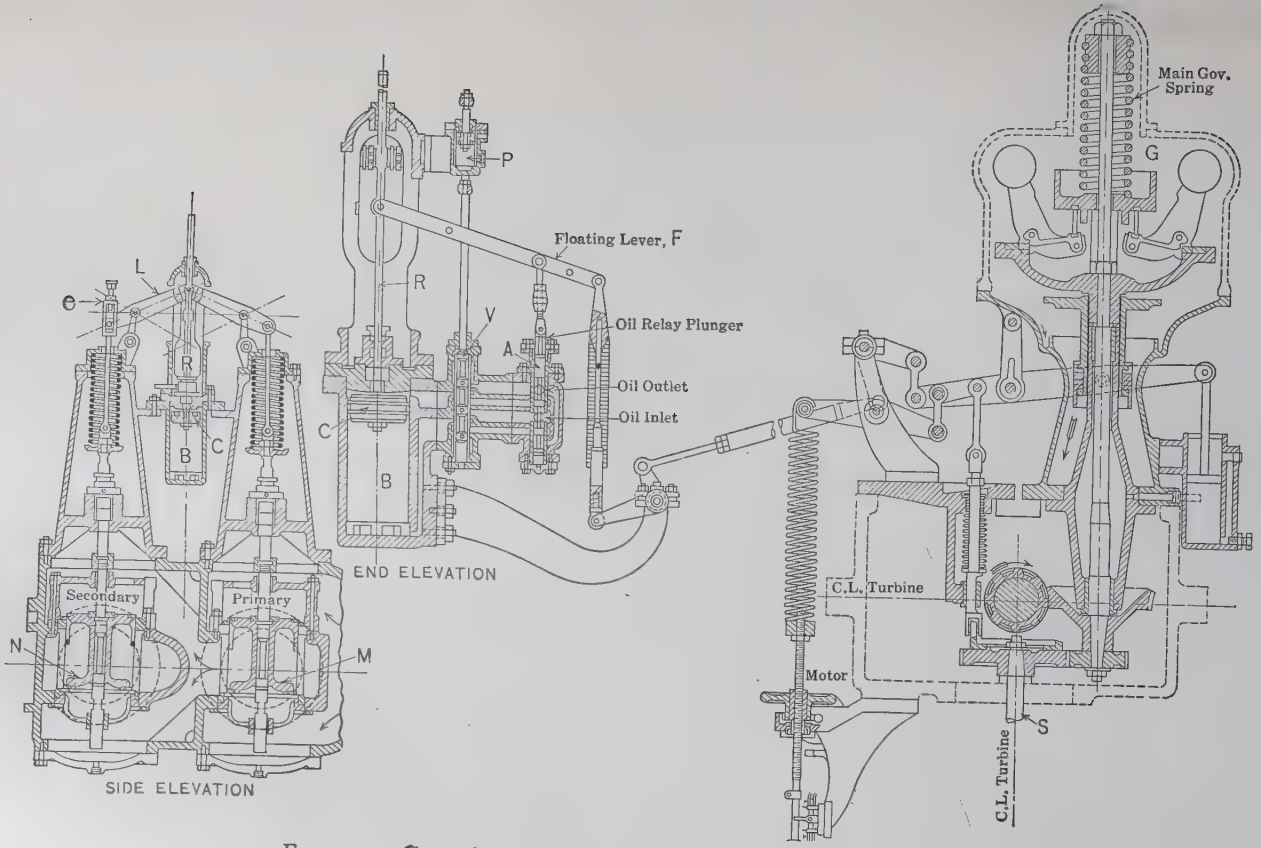

FIG. 174a. Governing and Oiling System of Westinghouse Turbines.

If the tendency is for the load to increase, the speed will tend to fall off. This causes the governor balls to close slightly and by connecting levers the floating lever **F** is raised. The piston rod **R** remains stationary (for the moment), the relay plunger **A** is raised, admitting oil above the operating piston **C**, and at the same time connecting the cylinder **B** below the piston with the discharge outlet. Then the operating piston **C** moves downward until the relay plunger **A** shuts off the oil supply, at the same instant closing the oil discharge outlet. If, now, the operating piston **C** moves downward too far, moving also the steam valves **M** too far and admitting too much steam to the turbine, for the load required, the speed increases and the reverse action takes place; that is, the relay plunger **A** moves downward, admitting oil to the lower side of the operating cylinder. Detailed operation can be explained better by the enlarged view of the relay plunger shown in **Fig. 174b.** When the relay plunger **A** is lowered below the position shown, oil flows from the inside supply port marked 25, through the passage ways 26, 40, 38, 36, and 37 into the cylinder **B** and lifts the piston **C,** and the piston rod **R.** As the latter rises, the valve rod on the primary or main valve falls and with it the primary admission valve, thus reducing the amount of steam admitted to the turbine. When this valve has moved down as necessary to regulate the steam supply according to the load and the desired speed, the piston rod **R** will be moved up about the temporarily fixed pivot at the left-hand end of the floating lever and will have carried with it the relay plunger **A,** thus closing the oil port and holding the piston **C** at rest until the next change of speed of the turbine. For any one speed the relay plunger **A** covers the ports of admission to the two sides of the piston **C** and

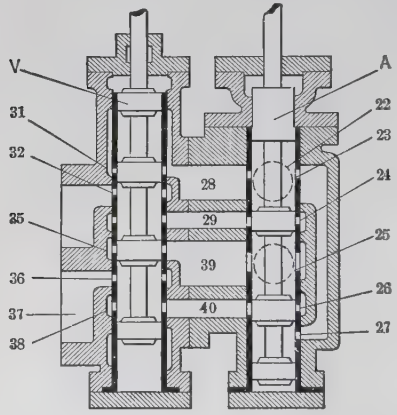

FIG. 174b.

allows the oil from 25 to enter both above and below the operating piston **C** at intervals in rapid succession. This oscillating motion insures free and sensitive action.

An auxiliary safety "pilot" device is shown in **Fig. 174b.** It is moved by a piston **P** which is in turn operated by a safety stop governor (similar to the "speed limit," see page 243),

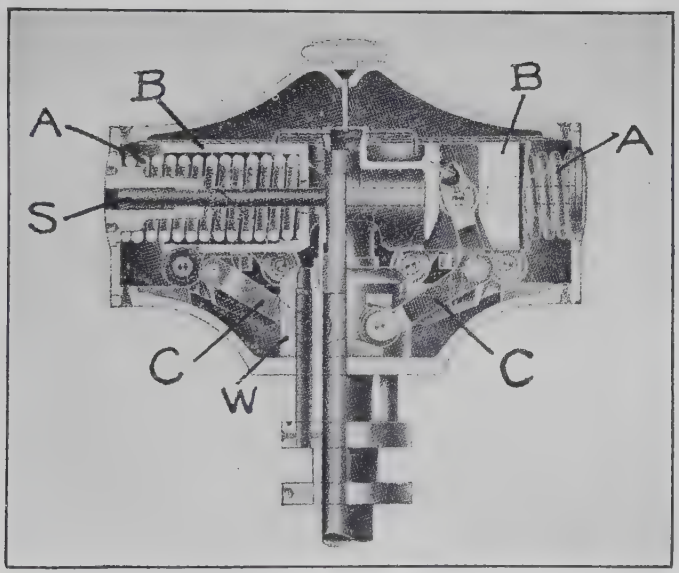

FIG. 174c. Jahns Governor.

which when tripped, allows steam to enter and drive down this piston and the plunger valve **V** until the ports 35 and 36 are open to oil pressure from 25 through 39 to the under side of the oil operating piston **C.** As this piston rises, the primary or main admission valve **M** closes irrespective of the position of the governor-controlled relay plunger **A.** When the plunger valve **V** has dropped as stated, the ports 32 and 31 are open to discharge oil through 28 and 23 to the release pipe 22.

Normal speed regulation of the turbines using this system is about 2 per cent. from full load to no load.

Jahns Turbine Governor. The speed regulating governor used on some De Laval turbines and some other makes is of the Jahns type (**Fig. 174c**). It is unique in that it is mounted in

such a way that the weights move on roller bearings on a horizontal spindle. The weight **W** acts only indirectly upon the governor springs **A, A** and in such a manner that the spring pressure is not transmitted directly to the governor mechanism. The movement of the sleeves **B, B** in the horizontal plane is guided in both horizontal and vertical directions by small roller bearings. The heavy stresses due to the centrifugal force of the governor weights during acceleration and retardation are not, therefore, brought upon pin joints or other mechanical devices of light construction. The movement of the sliding sleeves on the spindle **S** is effected by the bell cranks **C, C** which engage both the weights and the sleeves through connecting arms supported likewise on roller bearings.

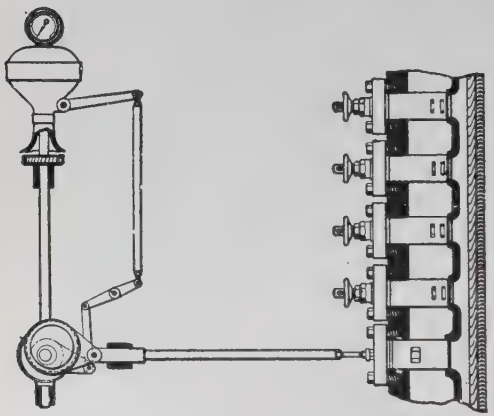

Fig. 175. Wilkinson Valve Gear.

Wilkinson Governing Device. An interesting type of valve gear has been applied to Wilkinson turbines. The general arrangement is illustrated in **Fig. 175** showing governor, eccentrics, and a series of valve casings. One of these casings contains what is called a **governor nozzle** which is connected mechanically with the eccentrics. This is a form of auxiliary valve of which the function is not primarily to discharge steam into the turbine blades but to admit steam into or eject it from the other valve casings for the purpose of opening or closing them. This governor nozzle is illustrated in **Fig. 176.** The important feature of the governor nozzle is a **cone-shaped piston** at the lower end of the valve rod passing through the stuffing-box and connected to the eccentrics as shown in Fig. 175. A cone-shaped jet flows continuously over this cone. The central chamber of the governor nozzle as well as the spaces around it except a narrow annular passage communicating with a similar passage shown by a circular section in Fig. 176 at the left-hand side of the

central chamber contains, in normal operation, steam at the "admission" or initial pressure.

The valves in the other casings are operated by the force produced in this annular chamber by the injector or ejector action of the cone-shaped jet. Steam to be admitted to the annular passage must pass around the cone-shaped piston, and the position of this piston with respect to the annular passage determines the effective pressure of the steam operating the admission valves. When the cone-shaped piston is in its lowest position the steam in passing around it to enter the turbine nozzles opposite, produces an **ejector effect** in the annular passage; but when the cone-shaped piston is at the other end of its stroke the steam produces an **injector effect** in the annular passage. When the **injector effect predominates** the pressure in the annular passage is greater than that in the steam chest, while with the **ejector effect predominating** this pressure is considerably less.

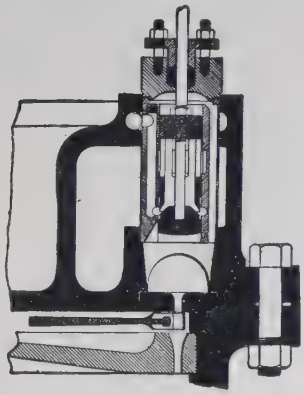

FIG. 176. Governor Nozzle.

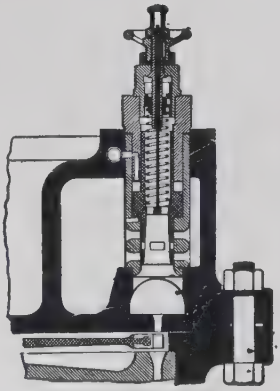

FIG. 177. Admission Valve.

One of the **admission valves** is shown in **Fig. 177.** A small passage of **circular** section shown here in the wall of the steam chest communicates with the governing valve or governor nozzle. This passage communicates with one side of the piston valve illustrated here. A spring is provided to keep the valve closed when the pressure in the passages communicating with

the governor piston is the same as in the steam chest. When the pressure in the passages is, however, less, **corresponding to the ejector effect,** by an amount greater than the tension in the spring (about 25 pounds) **the valve is opened.** With the injector effect, on the other hand, the valve will be closed.

In its action this valve gear is not unlike the usual Parsons governing device which has already been explained. It is likely that both are affected by *quasi* throttling at very light loads. To some extent the magnitude of this effect would probably be in proportion to the length of the casing.

Pneumatic Steam Turbine Governors. The Ridgway Dynamo and Engine Company uses a pneumatic governor on the turbine which it manufactures. This governor consists of a fan on the end of the turbine shaft which creates considerable air pressure when the turbine is running at rated speed. This compressed air is delivered to two small aluminum pistons which control the oil relay on the main governing valve. The pistons move against the pressure of a spiral spring. The air pressure varies as the square of the speed of the turbine, and therefore the governor acts quickly. This type of governor is subject to a variation of about 1 per cent. for an inch change in the barometer reading, and also about 1 per cent. for every 10 degrees change in engine room temperature. These variations in this governing device are adjusted automatically by a synchronizing motor.

By-pass Governors. In all turbines the area of the steam passages increases in going from the high-pressure end to the exhaust. Consequently it is possible to pass a larger quantity of steam through a turbine for an overload, by admitting high-pressure steam into the middle stages in addition to the steam coming through the high-pressure nozzles. This is accomplished usually by the use of an auxiliary valve which opens slowly when an overload comes on the turbine and admits high-pressure steam directly into the low-pressure stages. As the steam entering through the by-pass valve acts on fewer rows of blades than the steam admitted under normal conditions, obviously, of course, the method is uneconomical and should, therefore, be used only for

emergency loads. When a by-pass valve is used, the turbine is designed to be large enough to carry a little more than the normal full load, at which, of course, it is most economical; and for overloads it is expected that the efficiency will be considerably reduced.

All the makers of Parsons and Rateau turbines use by-pass valves. The Westinghouse turbine has by-pass overload valves under the control of the governor, so that they open automatically when an overload comes on, but on most turbines by-pass valves are opened by hand.

Overload economy is not usually of great importance, so that, practically, it is considered more feasible to use overload valves than to install additional turbines. In turbines of the Curtis type, which can be made to take a large overload with the addition of only a few extra nozzles without increasing the other dimensions, by-pass valves for overload have no advantages. In Parsons turbines, as anticipated in the design, there is usually a falling off in speed when the overload valves open.

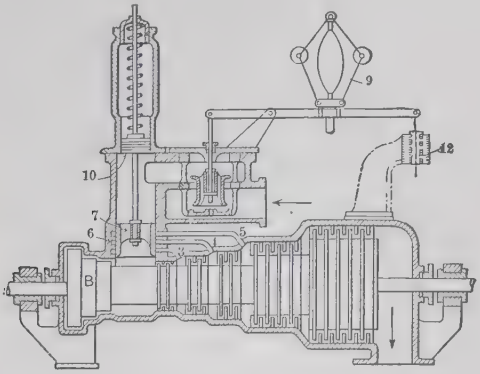

FIG. 178. By-pass Valve Designed by Brown-Boveri & Co.

A by-pass governor is shown in **Fig. 178**, which is a diagrammatic sketch showing the method of admitting high-pressure steam to the low-pressure stages of a Parsons turbine. This particular device is due to Brown-Boveri & Co. This design shows the by-pass method applied to an exceptionally well-made

turbine much used in Europe. The by-pass ports open only at overload, and the speed is regulated for small fluctuations by the throttling method. In the figure the centrifugal governor is marked 9, and operates by means of levers a balanced throttle valve. The by-pass valve 7, on the other hand, is operated by the pressure on the piston 10. Since this piston and the by-pass valve are on the same valve stem, they are raised or lowered together according as the pressure in the steam chest is high or low. With a high pressure the piston rises, lifting with it the valve 7, thus uncovering the ports, shown on one side of the turbine at 6, which admit steam through the pipes 3, 4, and 5 to different parts of the turbine casing. Obviously there is a considerable change in the power developed immediately after the steam is admitted to one of the pipes 3, 4, or 5; and the consequent fluctuation in speed is taken care of by the throttling governor 9, or by an electrical solenoid governor indicated at 12.

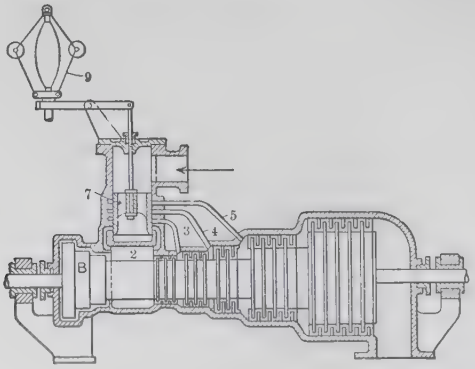

Fig. 179. By-pass Valve Arrangement for a Parsons Turbine.

A simpler type of by-pass valve and governor arrangement is illustrated in **Fig. 179.** The by-pass valve is here directly under the control of the governor. The governor is marked 9 in the figure and operates a by-pass piston valve 7. The steam enters the turbine through the steam chest over the by-pass valve. When there is no overload on the turbine, the steam passes through the side port, which is shown open in the figure, to the

steam space 2 below, and from here it passes through the turbine. When, however, there is an overload, the by-pass valve 7 is raised by the governor and high-pressure steam is admitted through the pipe 3 to some lower pressure stages. With still more overload the ports for the pipes 4 and 5 are also opened and high-pressure steam is admitted to stages intended for still lower pressures.

When in order to make repairs to the condenser equipment, or for other reasons, it is necessary to run a Parsons turbine **non-condensing** the by-pass valve is opened and high-pressure steam is admitted to the intermediate stage of the turbine. By this method, because of the larger area of the passages, more steam can be used and the turbine is able to carry full load without a vacuum, although, of course, at a sacrifice of economy.

If turbines are designed to take a large **overload without a by-pass,** the turbine must be of correspondingly greater capacity than the full rating indicates. The best economy of steam will then be at the highest output, and not quite so good at three-quarter load and full load. This is the usual practice in designing impulse turbines; but in the large sizes of Curtis turbines special overload valves are provided.

Curtis Overload Valves. In Curtis turbines of four or five stages, especially in the larger sizes, automatic valves are provided to open additional nozzles in the diaphragm between the first and second stages at times of overload. The usual designs of such valves are similar to the one shown in **Fig. 180,** which is arranged to operate when the pressure in the first stage — due to a large flow of steam — is larger than the normal. This design consists essentially of a piston valve fitted with a spring of sufficient strength to balance the unequal pressures on its faces for normal operation of the turbine. In the position shown in the figure the valve is closed; that is, no steam passes through it from the first stage to the nozzles discharging into the second stage. The pressure on its upper face is that in the first stage, while the pressure on the lower face is approximately that in the third stage

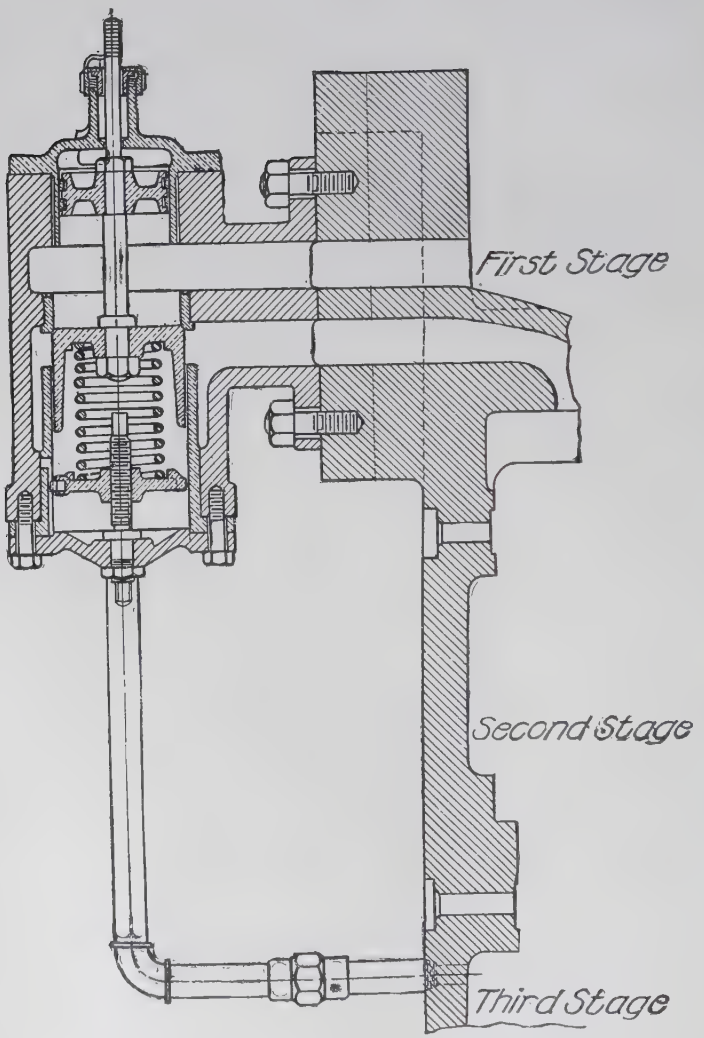

FIG. 180. Curtis Overload "Stage" Valve.

As the flow of steam increases due to increasing the load with a constant nozzle area the pressure will become greater in each of the stages; but obviously the pressure will be increased much more in the first stage than in the other stages, and at an overload the difference in pressure between the first and third stages becomes great enough to overcome the resistance of the spring on the overload or stage valve, so that it is forced from its seat. Steam then passes through a port communicating with an extra set of nozzles discharging into the second stage.

These valves should be adjusted by varying the tension of the spring, so that they tend to open and close within a comparatively small range of first-stage pressure.

If the adjustment of such a valve has not been properly made and the valve remains open with a load fluctuating in a wide range between overload and considerably less than normal, the economy may be seriously impaired, or if one of these valves remains in a partly closed position so as to throttle the steam, the economy will be affected at all loads. Such valves to be efficient should open and close abruptly.

Experimental Data Concerning Governing. Something should be said about the experimental results at hand concerning the different methods of governing. Curves illustrating the effects of throttling have been shown in Fig. 161, but a more satisfactory comparison can be made from the following table.

	Rated Full Load.	Fraction of Load.		
	Kw.	½	¾	Full.
Curtis	500	51.7	76.2	100
Curtis	600	52.4	76.5	100
De Laval	20	68.0	82.0	100
De Laval	200	52.3	76.2	100
C. A. Parsons Company	500	56.0	78.0	100
Rateau	500	55.0	77.2	100
Westinghouse-Parsons	400	57.0	78.5	100
Westinghouse-Parsons	5000	51.9	76.0	100
Zoelly	350	58.8	80.3	100

Fractions of load given at the top of each column refer to fractions of the most efficient load. Steam consumption at the different loads is expressed as a percentage compared with the steam consumption at the most economical load for each particular machine. In other words, if the economy of any of these turbines were as good at half load as at full load we should have in the table under the column for one-half load 50 per cent, etc.

Results in this table must be used guardedly and not confused with steam consumption. For example, the De Laval 200-kilowatt turbine appears to such good advantage here because the system of governing used for these tests was nearly ideal. Full load steam consumption, on the other hand, was high compared with any other make of turbine in the list. The Zoelly, Rateau, and the 20-kilowatt De Laval turbines used simple throttling governors.

In the effects of governing, steam turbines and reciprocating engines are different. The usual type of reciprocating engine has its speed lowered as the load is increased. Within limits, it happens also that the fall in speed is accompanied by a smaller requirement for steam. On the other hand, steam turbine governing operates in the reverse order, in that a fall of speed due to heavy load results in slightly increased " relative " speed of the steam *in the blades*, and consequently more steam will flow through the turbine.

The Curtis and the 200-kilowatt De Laval were governed by varying the number of nozzles to suit the load. The original Parsons turbines used the " blast " governor. These data lead to the conclusion that the experimental De Laval (200-kilowatt), the large Westinghouse and the Curtis designs give the best results as regards the method of governing.

In most cases low-pressure turbines operate with no other governing device than the over-speed (emergency) governors when the high-pressure and low-pressure units are connected electrically; and the high-pressure unit may be either a steam engine or a steam turbine. The governor on the high-pressure unit regulates the load on the combination of units.

CHAPTER IX.

LOW-PRESSURE STEAM TURBINES.

EARLY in the period of steam turbine development it became apparent that these new types of prime movers were capable of operating with ratios of expansion far beyond those economically possible with reciprocating engines.

In the discussion of the effect of vacuum on steam consumption the good results obtained with turbines running at a high vacuum were clearly shown. With a high vacuum the heat efficiency of a reciprocating engine is not nearly so good as that of a turbine, because it is not desirable to make the engine cylinders large enough to handle economically the great volume of steam we have to deal with when the exhaust pressure is very low. For pressures slightly above atmospheric, however, a first-class, slow-speed reciprocating engine has a slight advantage over the turbine. We can see, then, that a combination of a **non-condensing** reciprocating engine with a condensing turbine, the latter taking exhaust from the former, might well be suggested.

Fig. 181 shows graphically the volumes of the steam in each of the five stages of a Curtis turbine and illustrates how rapidly the volume increases at very low pressures. Reciprocating engines may be designed to operate with improved economy up to 25 or 26 inches vacuum; but this is about the limit. Steam turbines, on the other hand, will operate economically * with steam at the highest vacuum practically obtainable.

The initial pressure of low-pressure steam turbines is usually that of the exhaust steam from non-condensing engines. With

* It is not always commercially profitable to design a plant for operation at an extremely high vacuum, as the first cost of condensers and auxiliaries is usually a deciding factor.

steam admitted to the engine at 200 pounds and exhausted from the turbine at 28 inches vacuum, theoretically there is no difference in the total economy of a unit consisting of a reciprocating

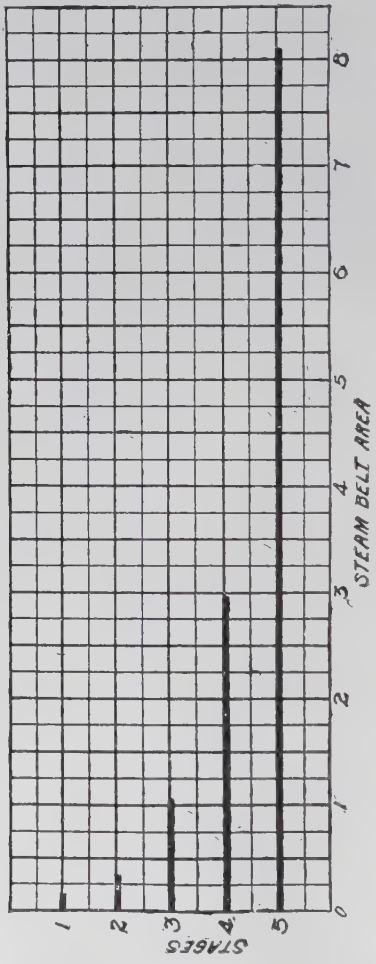

Fig. 181. Relative Volume of the Steam in Each of the Five Stages of a Curtis Turbine Operating with Dry Saturated Steam at 165 Pounds per Square Inch Initial Pressure and 29 Inches Vacuum.

engine operating with an exhaust turbine taking steam within the limits from 7 pounds to 15 pounds per square inch absolute. The curve in **Fig. 181a** shows the energy (B.T.U.) made available

by expansion from 26 inches vacuum to higher. The rapid increase above 27 inches is an important consideration and makes

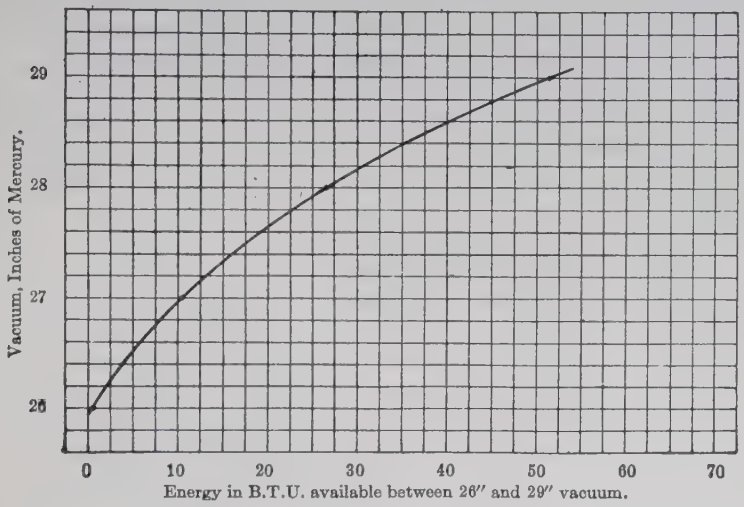

FIG. 181a. Curve Showing Enormous Energy Made Available for Work by Expansions to High Vacuums. *Experimental Data.*

it very essential to get a very high vacuum in the exhaust on account of the enormous energy obtainable.

Flattening out of the curve of the specific volumes of steam, **Fig. 181b,** is also interesting in this connection. The increase in volume as the expansion is carried beyond 28 inches of vacuum is not generally realized.

The following table prepared by the General Electric Company shows the large amount of work that is made available by the use of turbines in connection with existing non-condensing and condensing plants, the steam being delivered to the steam engine at 165 pounds per square inch absolute pressure.

Owing to the rapid development of the turbine industry for high speed work and the close attention on the part of designers to this branch of turbine applications, the " combination " system of reciprocating engines and turbines was neglected. Only recently the advantages of this system have come to be generally

recognized, and particularly in connection with marine propulsion. Parsons has never advised the installation of an "all turbine" arrangement for ships designed for a speed of less than

	Atmospheric Pressure.	Inches of Vacuum.					
Pressure of steam at turbine admission valve in inches of vacuum.	0	4	8	12	16	20	24
Per cent. gained over output of engine when worked with high vacuum (26 ins.,) the turbine exhausting to a vacuum of 28½ inches.	26.1	26.5	26.8	26.3	25.3	23.6	20

15 knots, and for moderate or slow speeds his designers have recommended the "combination" system. According to one of his designs for a cargo vessel intended for a speed of 11½

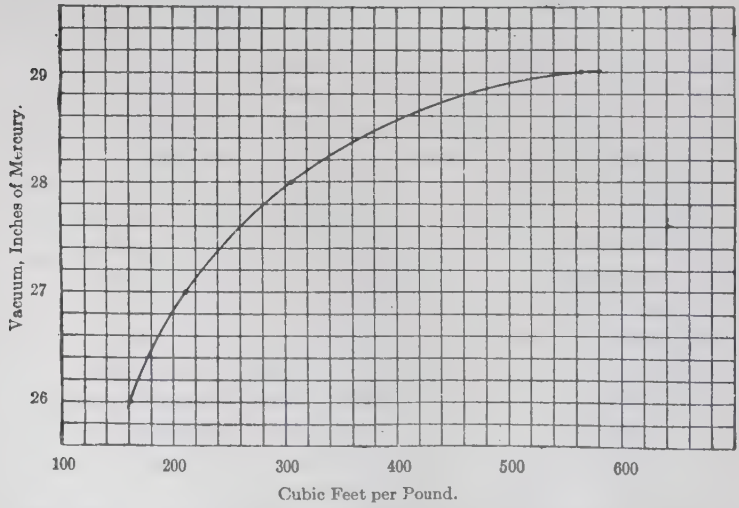

FIG. 181b. Curve of Specific Volumes between 26 and 29 Inches of Vacuum.

knots, if provided with a reciprocating engine discharging steam into the turbine at 7 pounds per square inch absolute pressure, the steam consumption was estimated to be 15 to 20 per cent. less

than that of an "all turbine" arrangement, or of triple expansion engines of the type usually fitted to this class of vessel. The " combination " system gives a vessel also greater maneuvering power than if driven only by turbines.

On land low-pressure turbines have been installed principally in connection with rolling mill engines in steel works and winding engines in mines. In both cases the engines are stopped or are running practically idle a large part of the time. These engines are usually reversing and are operated non-condensing. When a low-pressure steam turbine is installed to take the exhaust from such engines an equal amount of power can be obtained from the turbine (at 28 inches vacuum) as from the engine, thereby doubling the power of the plant without increasing the consumption of coal or the size of the boiler plant.

Throughout the country there are a great many reciprocating engines exhausting into the atmosphere, and the exhaust from these engines is often wasted. There is no doubt that when these plants need increased capacity an installation of exhaust turbines will be profitable, even in most cases where there is no supply of water for condensing, and cooling towers must be erected.

There are also many power plants equipped with high grade compound reciprocating engines operating condensing which have a higher **efficiency** (not steam consumption) when operating non-condensing, or at a comparatively small vacuum, than when operating condensing. In such cases the installation of low-pressure turbines is probably always profitable. As an instance of the uses of exhaust steam turbines the following paragraph is quoted from a report prepared by a company manufacturing large sizes of both reciprocating steam engines and steam turbines.

" A compound reciprocating engine with cylinder ratios of 3.5 : 1, say of diameters 28 inches and 52 inches, with 150 pounds initial pressure, may be assumed to have 1000 kilowatts economical capacity when running condensing and having a steam consumption of about 22 pounds per **kilowatt-hour.** This engine if operated non-condensing should have valve gears adjusted to

develop 1700 I.H.P., when it would consume about 20 pounds of steam per I.H.P. per hour. This gives 30,600 pounds steam available for the turbine, allowing 10 per cent. of moisture in the exhaust of the reciprocating engine. The total amount of steam passing the reciprocating engine, however, being 34,000 pounds, 30,600 pounds would develop not less than 1073 brake horsepower in the turbine. Allowing 94 per cent. for the mechanical efficiency of the reciprocating engine, the combined horsepower developed would be 2673 brake horsepower and the steam consumption of the two units 12.7 pounds per brake horsepower, or 18 pounds per kilowatt-hour, which is a remarkable performance for engines of such capacities operating without superheat. Compared with the performance of the reciprocating engine running **condensing,** this gives 75 per cent. increase of power and 18 per cent. saving of steam."

Fig. 181c shows a very important installation of 5000-kilowatt steam turbine-generators in combination with reciprocating engines of the same power rating. A low-pressure steam turbine has been installed to take the exhaust from each engine.

Condensing engines when changed to non-condensing operation do not necessarily have their capacity in horsepower reduced because of the great increase of back pressure against which they must then operate. Such reduction would appear, however, on first thought to be the natural result; but, contrarily, the capacity of such an engine when changed to non-condensing operation may be unaltered or even in exceptional cases may be actually increased; particularly is this the case if the engine is one designed for a high expansion ratio. Under these conditions the high-pressure cylinder must have enough volume to pass the required amount of steam, without having the cut-off come so late as to sacrifice all opportunity to use the steam with a reasonably good expansion. There is an interesting reason for the capacity of many compound engines not being reduced when this change is made. In this adjustment the cut-off of the high-pressure cylinder has been shifted to make it late enough so that expansion in the low-pressure cylinder will not cause a loop in

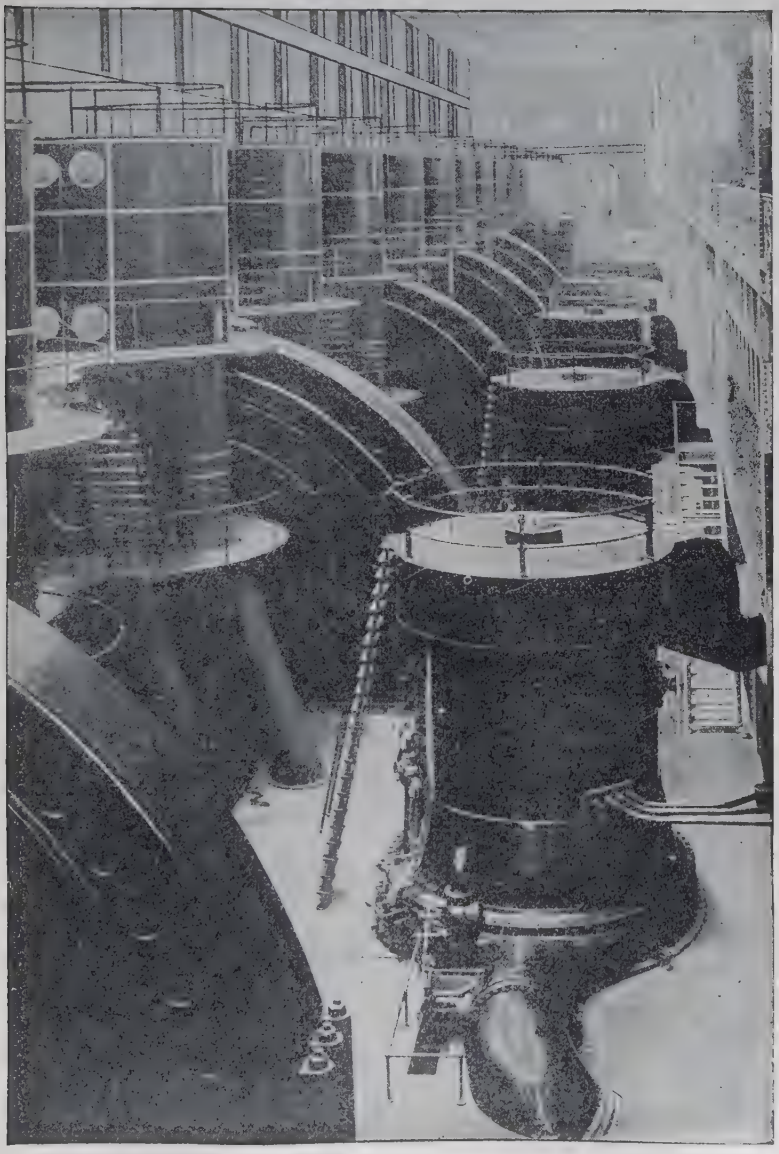

FIG. 181c. Steam Turbines taking the Exhaust from Large Reciprocating Engines.

the indicator diagram or to a final pressure in the low-pressure cylinder when its exhaust valve opens, which is lower than the average pressure in the exhaust line supplying the turbine, which is also the engine exhaust pipe. As the result of this adjustment of cut-off in the high-pressure cylinder the top part of the indicator cards taken from it will be observed to be much enlarged and of greater area than before, the increase being in some cases greater even than the area which is lost at the bottom of the low-pressure diagram by raising its exhaust pressure to about atmospheric. But there are also many compound engines operating condensing in which the release in the *low-pressure* cylinder occurs when the pressure is relatively high, possibly as high as atmospheric. Now the application of a low-pressure turbine to take the exhaust from this engine would have the effect of very materially reducing the capacity of the engine, as the benefits to be obtained to avoid the loop in the low-pressure diagram have been sacrificed in the original design of the engine and there is no chance to increase the area of the top of the diagram.

Engines designed to operate both condensing and non-condensing have generally the valves adjusted so that normally there will be a rather high back pressure at the point of release in the low-pressure cylinder, so that this "looping" of its indicator diagram will be avoided when running non-condensing or on light loads. When carrying full loads or an overload, on the other hand, the expansion will not be complete and a serious loss results in such engines designed for operation with loads varying considerably. In this case when the low-pressure turbine is applied there will be no occasion for the high back pressure at release, and the valve setting can be changed when running at full load to exhaust the steam from the low-pressure cylinder so that the exhaust pressure will be atmospheric or possibly a half pound or a pound above to assist in getting the steam readily through the exhaust ports of the engine. For this condition the blades of the low-pressure turbine taking this exhaust should be designed for initial pressure approximately atmospheric when

getting the amount of steam used by the engine at full load. Now when the cut-off is shifted back by the governor to keep the inlet valve of the engine open only half as long as at full load, only half as much steam will be delivered to the turbine and the absolute inlet pressure to it will also be reduced to half its former value. The final result is that the expansion of the steam in the low-pressure cylinder of the engine will be about to the inlet pressure of the turbine and there will be no appreciable " looping " of its indicator diagram, indicating that the conditions as regards effective expansion of the steam are excellent.

In large power plant installations, it is the best practice to adhere to the " unit system " throughout; that is, in providing a separate low-pressure turbine for each engine and also a separate condenser for each turbine. This method, although considerably more expensive than that of passing the exhaust steam from several engines to a single receiver supplying a relatively larger low-pressure turbine is, however, much to be desired as it gives so much greater flexibility in the operation of the plant and reduces very much the liability to an enforced shut-down of the plant due to condenser troubles. Maximum load on a low-pressure turbine connected to the engine as here described, that is, without having a governor on its steam supply pipe, is usually reached in conventional designs when the pressure at the inlet to the turbine is about twenty pounds per square inch absolute. A relief valve must always be provided in this low-pressure supply line which should open to let steam out to atmospheric exhaust when this pressure is exceeded. Steam discharged through the relief valve is an excess above what can be used in the turbine and is obviously wasted.

All possible precautions should be taken to prevent the leakage of air into all that part of the system operating at less than atmospheric pressure. This air is very detrimental to the proper action of a good condenser as it reduces the attainable vacuum and consequently renders impossible the full gains to be expected from the installation of low-pressure turbines. Such leaks occur most generally in the joints of the exhaust piping of

both engine and turbine, also in imperfectly tight relief valves, as well as through the stuffing-boxes on the piston rods of the low-pressure cylinder of compound engines. To eliminate these difficulties the piping should be examined and tested frequently by applying a lighted taper to all questionable joints to observe whether the vacuum inside the piping tends to draw the flame toward it, as would occur if there were a leak. Another precaution often necessary is to put a special type of stuffing box on the piston rods of the engines, these boxes being supplied with steam at a pressure slightly above atmospheric so that air leakage inward is prevented.

When several engines are connected up to supply exhaust to a single low-pressure turbine, it is always most desirable to turn over each engine for several revolutions with the piping connections arranged so that the engine just starting will exhaust into the atmosphere. This should be done in order to avoid discharging the air in the engine cylinders into the low-pressure turbine and into the condenser. If this precaution is not taken when several engines are operating and another is started the effect in vacuum reduction will be observed.

In matters of design, the low-pressure steam turbine presents no new problems. In fact its construction is in many respects simpler because of requiring fewer complicated details than the usual types of high-pressure or "complete expansion" turbines that have been studied. The relatively short length of the shaft or drum required for low-pressure turbines makes for rigidity and freedom from vibration stresses. The skill of the engineer comes into play in this new field almost entirely in the methods of application to conditions that a few years ago were not thought of. The primary consideration in practically all these applications is to utilize as much as possible of the available exhaust steam about the plant, either in the low-pressure turbine or in some still more efficient method. While it is the object to show here the great advantages of this type of prime mover, yet it should be pointed out that there are often conditions arising in power plant practice when exhaust steam can

be used much more efficiently than in any known type of prime mover. The maximum thermal efficiency of a low-pressure turbine cannot well be made to greatly exceed 10 per cent., and even with this low efficiency when exhaust steam is a by-product, with no other available use, the addition of such a turbine to the plant will in such cases produce a great saving in coal bills. In other cases, however, where exhaust steam can be used advantageously for heating water, as for example in feed-water heaters, hot-water vats in manufacturing processes, or for heating buildings, it would certainly be false economy to use the exhaust steam in a turbine and install low-pressure boilers for heating water. In the cases cited the thermal efficiency of the process of heating water with low-pressure steam is usually about 80 per cent., which is to be compared with the 10 per cent. efficiency of the turbine. In this analysis it must not be overlooked, however, that a steam power plant operating non-condensing can use only a very small percentage of the total amount of its exhaust steam for heating the feed water. In fact in the average steam engine plant operating non-condensing only about one-sixth of the exhaust steam can be used for heating the feed water, the other five-sixths being discharged into the atmosphere through the exhaust head.

Of first importance among the general considerations affecting low-pressure turbine applications is the providing of adequate facilities for the removal of water and oil from the steam before it enters the turbine. Very wet steam can have no considerable deleterious effect on the turbine compared with the disastrous results often experienced in steam engine practice. It has the effect, however, of increasing enormously the fluid friction in the turbine blades and therefore of reducing the output and raising the steam consumption. Oil, when clean and pure, is not necessarily objectionable in the turbine and will pass through without accumulating, but in cases where boilers sometimes foam and discharge sulphates and carbonates with the steam, these will mix with the oil and form a gummy deposit on the blades. This deposit is not ordinarily removed by erosion, particularly

when steam velocities are not over 400 feet per second, and will often choke the steam passages between the blades.

Until recently in America exhaust steam turbines were usually arranged to take steam directly from the exhaust pipe of the engines without intervening valves or governing mechanisms. A generator direct connected to the turbine will operate very satisfactorily with generators adapted for connection in parallel to engine-driven generators, and the turbine set thus "floats on the system." As it receives only steam exhausted from the engine its output will therefore vary as the load on the engine. When the load becomes light the steam supply will be reduced by the governor on the reciprocating engine. In the case of direct current units the generators may have shunt windings, and as the voltage will vary nearly as the speed, the load will be automatically proportioned between the reciprocating and turbine units.

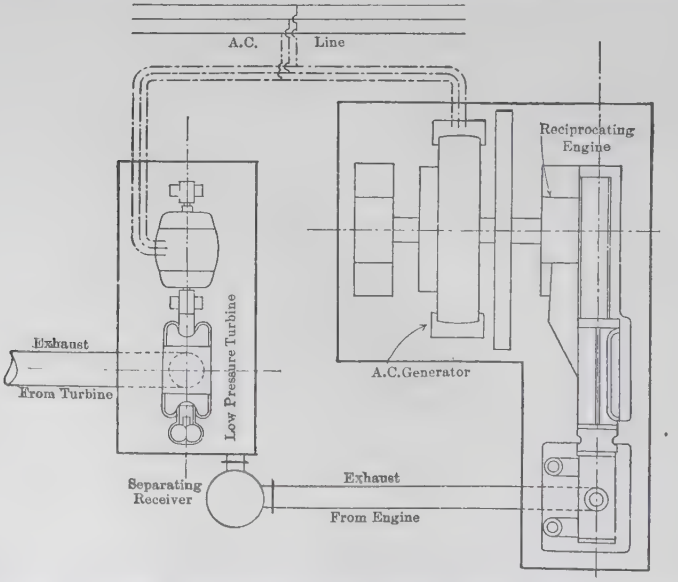

FIG. 181d. Simplest Combination of Low-pressure Steam Turbine and Reciprocating Steam Engine.

The most common and probably also the simplest application of the low-pressure turbine is shown in **Fig. 181d.** As shown the

generators connected to both the reciprocating engine and the turbine are connected to the same three-phase alternating-current circuit and here also no governor is used on the turbine. By this arrangement the turbine will take automatically its share of the total electrical load in proportion to the amount of steam supplied to it. If it tends to forge ahead of the reciprocating unit it will take more of the load, leaving less for the engine whose speed will immediately increase until its governor reduces the flow of steam to both the reciprocating engine and to the turbine, thus controlling with one governor the amount of steam supplied to the complete system. In case the generators driven by the engine and turbine are of the direct current type, as the turbine forges ahead, and takes more load, the increase in its speed raises the voltage slightly, which puts more current through the fields of the generators and tends to reduce the speed. Self-regulation is thus admirably accomplished. Obviously for the same reason it is possible to vary the speed of the turbine slightly by adjusting the field rheostat.

The quantity of steam used determines obviously the relative amount of load carried by the low-pressure turbine; the greater the amount of steam the greater the proportion of load taken by the turbine, which is due, of course, to the variation of pressure in the receiver. As this pressure increases the total range of pressure available for the turbine increases, the heat available per pound of steam increases, and consequently more work is done, assuming, of course, a constant vacuum in the turbine exhaust.

In the method of low-pressure turbine installation described in the preceding paragraphs, where the turbine operated without a governor of its own, the electrical machines driven (generators) were of similar types; that is, all the current generated was supplied to a single line. It is not infrequent, however, for low-pressure steam turbines to be installed to operate with reciprocating engines in power houses where the generators on the engines are to supply direct current lines and the generators on the turbines are to supply alternating current for transmission

to a distance. Such an arrangement is shown in **Fig. 181e.** Obviously the engine and the turbine must each have its own governor. If the low-pressure turbine were arranged to take only the load from the alternating current line there would be much steam wasted when the direct current load happened to be heavy and the other light; and conversely it might be necessary to sometimes supply the low-pressure turbine with high-

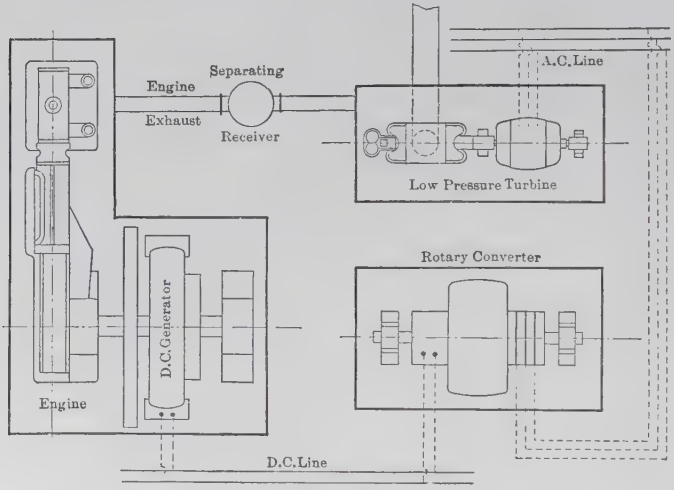

FIG. 181e. Application of a Rotary Converter in the Combination of Low-pressure Turbine with Reciprocating Engine.

pressure steam when the load on the engine was light. A most satisfactory method to avoid these difficulties is to install a rotary converter or motor-generator set as shown. Any inequality of the two loads will then be taken care of and the load coming on the engine and on the turbine will be divided automatically to give the best results. This sort of arrangement might not be very satisfactory for taking care of electric lighting loads if there were likely to be exceptionally frequent reversals of the operation of the converter from alternating to direct current and *vice versa*, as there might be a voltage change of several per cent. which would perceptibly affect illumination until again adjusted at the switchboard. In most cases, how-

ever, the demand for one kind of current will always predominate, so that this sort of reversal is not likely to be troublesome.

Another application of a low-pressure turbine is illustrated in **Fig. 181f,** where the steam engine drives a line of shafting through a belt drive and the low-pressure steam exhausted from the engine goes to a turbine generator unit supplying an electrical transmission line. In this case the engine and the turbine must each have a governor, as the loads on the two machines are en-

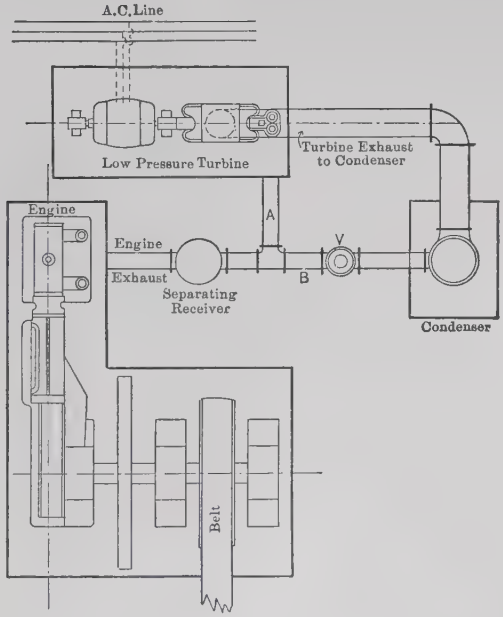

FIG. 181f. Application of Condenser in Combination System.

tirely unrelated. The device adopted in this case to make the plant as economical of steam as possible is to operate the engine in such a way that the excess of steam, above that required for the low-pressure turbine, is discharged directly into the condenser. By this method the **engine** will operate at times at a fairly good vacuum as determined by the relative amounts of steam and absolute pressures in lines **A** and **B.** The governor on the turbine operates only the by-pass valve **V,** regulating the flow of

steam from the engine exhaust into the condenser. When the load on the turbine is light this valve will be nearly wide open, deflecting only a small amount of steam into the turbine; but when the turbine load gets near its full capacity, the condenser by-pass valve will be nearly closed. It becomes thus possible for the engine to obtain the advantages of nearly full vacuum when the turbine is running light. It is a good practice to put the usual type of valve on the inlet pipe to the turbine which will also be controlled by the governor to prevent the turbine running away on very light load.

A very interesting type of installation is shown in **Fig. 181g.**

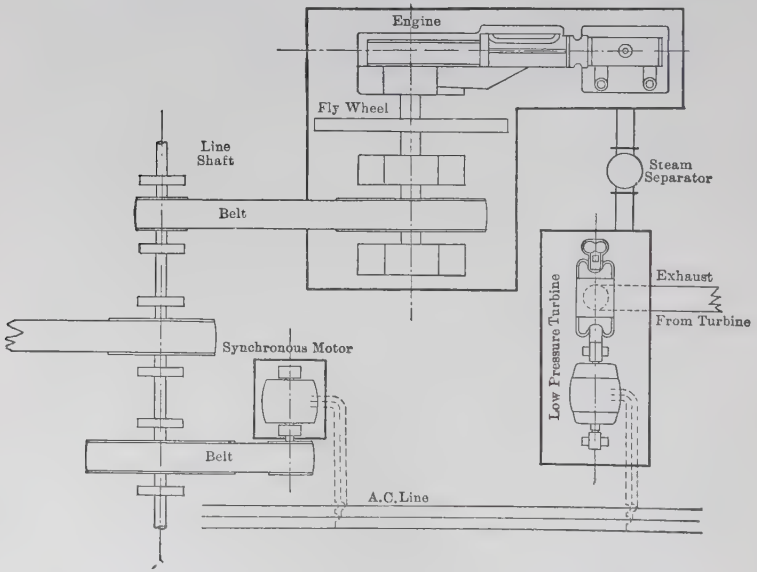

FIG. 181g. Application of Synchronous Motor in Combination System.

The method illustrated here consists in the installation of an electric motor of the synchronous type supplied with current from the generator driven by the turbine and having the pulley on its shaft belted to the line shafting driven by the engine. In case the electrical load on the turbine-generator set becomes too large for it to handle it will slow down slightly with the result that the synchronous motor will be driven from the line shafting

as a generator to supply more current to the electrical supply lines. The additional load coming on the engine as the result of driving the motor will cause the governor to open the inlet valve wider on the engine and admit a larger amount of steam to the system. Conversely, when the line shafting is overloaded the governor on the engine admits more steam to the system, in greater amount, however, than the turbine requires. This results in a speeding up of the turbine and a forging ahead of the synchronous motor so that it acts now purely as a motor to assist in driving the shafting.

Provisions for Intermittent Supply of Steam. An ingenious development, largely due to Professor Rateau, has been applied to cases where the supply of exhaust steam is intermittent, as in the case of rolling mill and winding engines. Rateau's device, called an **accumulator,** is used to bridge over the "dead periods," and by providing sufficient capacity it can be made to provide a practically constant supply for an exhaust turbine.

Rateau's Accumulator. This regenerator or accumulator is shown in **Fig. 182,** illustrating longitudinal and transverse sections. This regenerator consists of a large cylindrical shell partly filled with water. When the engine exhausting into it is running the steam is delivered as a spray through the small holes in a number of pipes immersed in the water. By this method some of the steam is condensed and gives up heat to the most of the water.

As these accumulators operate usually with steam at atmospheric pressure, the entering steam will have a temperature of 212 degrees F. and will tend to heat the water to that temperature. If, now, the engine stops, the supply of exhaust steam is discontinued, and the flow of steam to the turbine will tend to make the pressure fall off slightly so that 212 degrees F. will then be slightly above the temperature of boiling water at this lower pressure. In this way the water will be evaporated to supply steam as a boiler would. If, now, the engine starts again, steam will be delivered to the accumulator at a temperature slightly above that to which the water has fallen, due to the cooling effect of the evaporation for supplying the turbine, and the mass of water will again absorb

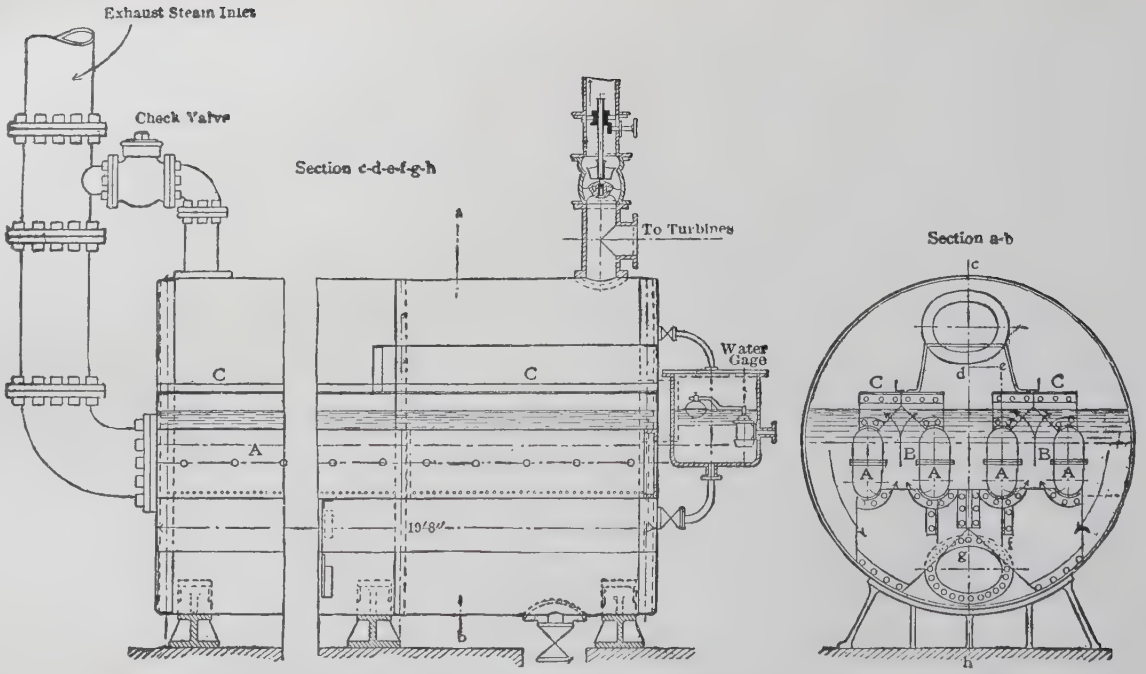

FIG. 182. Rateau's Accumulator for Steam Turbines Operating with the Exhaust from Reciprocating Engines.

heat from the exhaust steam. Water has a higher specific heat than any other substance except hydrogen, so that it is a most suitable and convenient substance for heat accumulation.

On account of heat radiation from the accumulator, water gradually accumulates in it; but by means of a float trap shown at the right-hand side of the longitudinal section this excess of water is removed.

If for any reason the engine shuts down for a considerable period, the supply of heat stored in the accumulator will become exhausted and the pressure will fall below the practical limit for operation of the turbine. To provide for such an emergency an automatic reducing valve is inserted in the piping to deliver live steam to the accumulator. There is also a relief valve on the accumulator through which excess steam will pass off into the air when the pressure becomes excessive.

The pressure in the accumulator should be always about three to five pounds per square inch, gauge pressure, or at least a few pounds above the atmospheric to avoid the possibility of air leaking into the system.

The important consideration in the selection and designing of an accumulator for a low-pressure turbine is the length of time the regenerator will be expected to carry full load on the turbine without receiving any low-pressure steam from the engine or engines. Obviously the longer this time is, the greater the capacity required of the accumulator. Quite generally the mistake has been made, according to Hodgkinson,* of supplying these accumulators in much too large sizes for the requirements. In many cases the time interval has been assumed to be six to seven minutes, during which the accumulator must supply the steam, while more careful study shows that five to six seconds would have been a much better estimate.

For engine power plants, where the supply of exhaust steam is often stopped for long periods or where there is a deficiency of exhaust steam for only a few short periods each day an accumulator installation is not warranted, and low-pressure turbines

* *The Electric Journal*, vol. X, page 335.

are provided with piping and simple valves to reduce the pressure of steam taken directly from the boilers, in addition to the exhaust steam piping. (See pages 365 to 378.)

The type of steam accumulator shown in **Fig. 182a,** is now made commercially in America, making it possible to operate boilers

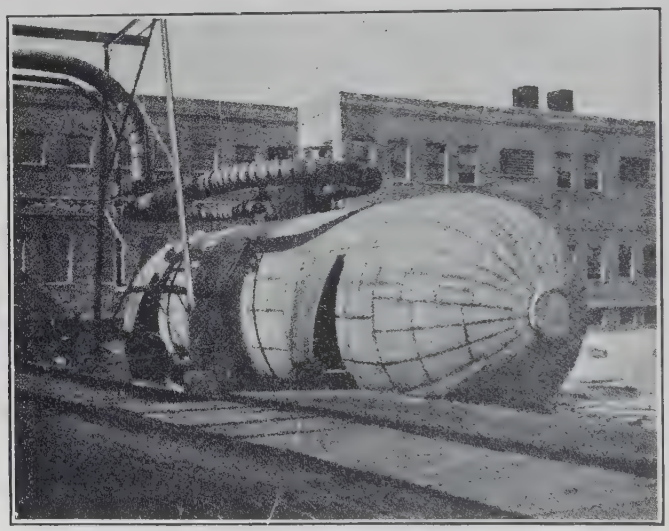

FIG. 182a. Exterior View of Ruth's Steam Accumulator.

constantly for a high output and still supply peak demands for steam. In most power plants constant steam pressure is as important as constant voltage and frequency at the generator. By the use of a steam accumulator when the peak demand occurs, a supply of steam at constant pressure is immediately available.

The large size and spectacular appearance of the accumulator often draws the most attention while actually the most important part for operating purposes is the system of control consisting of steam governors which regulate the steam distribution.

A chart showing by shaded areas the steam stored in the accumulators and by cross-sectioning and the steam discharged from the accumulator in the operation of a power plant, is given in **Fig. 182b.** It illustrates the fact that in a plant having fluctuating loads, the accumulator absorbs steam at times of

light load and releases it instantly to meet the peak load conditions.

The Ruths steam accumulator shown in **Fig. 182a,** is a cylindrical steel tank with hemi-spherical ends. In a typical in-

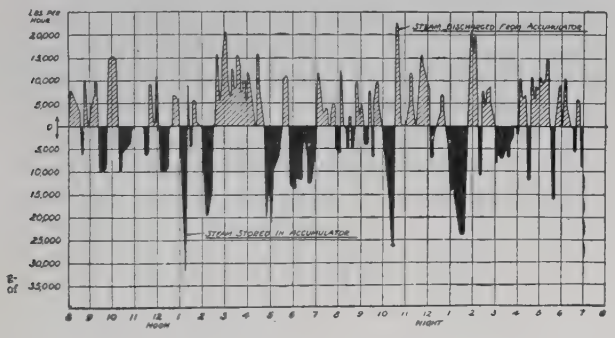

FIG. 182b. Diagram of Steam Requirements.

stallation, the steam accumulator is 16 feet in diameter and 55 feet long having a storage capacity for forty-five thousand pounds of steam.

The modern tendency in many steam power plants is to install boiler equipment for very much higher pressures than formerly, with pressures from four hundred to five hundred pounds per square inch becoming common. In such installations in industrial plants where a considerable amount of steam is required for manufacturing processes usually requiring steam at gage pressures less than 100 pounds per square inch, it is possible to generate a large amount of by-product electric power by expanding the high-pressure steam in steam turbines down to the pressure used for manufacturing and thus obtain electric power at very low cost. One of the difficulties inherent in this situation, however, has been that the steam demand for manufacturing and that for electric power are not coincident peaks and besides most of these requirements are quite variable. Probably the most suitable device for remedying this condition is the installation of a steam accumulator to permit generating the maximum amount of by-product electric power from steam turbines with-

out wasting any of the steam. A steam accumulator installed for this purpose will serve as a flexible connecting link between all parts of the plant and serve as a sort of balance wheel for the demands of steam for manufacturing and for electric by-product power.

A sectional view of a Ruths steam accumulator is shown in **Fig. 182c.** The piping connections are laid out in a simple way as they would be for only one kind of service as, for example, the supplying of steam at constant pressure for steam turbines in a power plant. The pipe marked **N** is connected to the steam main in the boiler room. All the high-pressure steam in excess of that used by the turbines passes from this line through the two regulating valves V_1 and V_2 which have suitable connections as shown. V_1 is a compound valve which is controlled mainly by the pressure in the steam main in the boiler room, while the control valve V_2 is a reducing valve intended to maintain a constant pressure in the steam main **P** supplying the steam turbines in the power plant. If at a certain moment more steam is passed through the valve V_1 than passes out through the valve V_2 the excess of steam will be passed through the connecting pipe **O,** the check valve **E,** the distribution pipe **F,** and the steam nozzles **G** into the water sprays of the accumulator. The heat in the steam discharged into the accumulator in this way will be stored by heating the water with which the accumulator is filled. Now when, on the other hand, the steam demand in the low pressure line **P** exceeds the supply of steam which comes in through the boiler room through the pipe **N,** the pressure of the steam in the pipe line **O** will be reduced so that the check valve **F** will close and the other check valve **I** will open and so much of the boiling water in the accumulator will be evaporated into steam that the efficiency in the low-pressure line is made up and a constant steam pressure is maintained in the pipe supplying the steam turbines. A water level gage **L** shows the level of water in the accumulator; and piping and valves at **N** are provided to maintain a proper level of water in the accumulator.

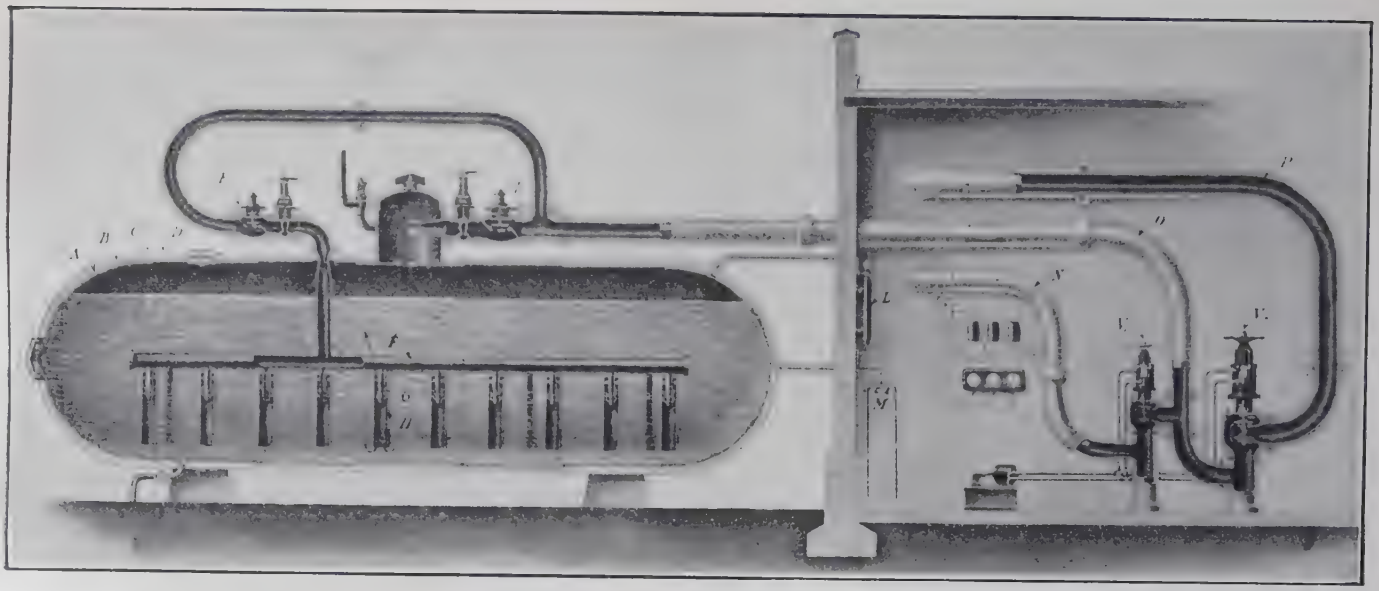

(361) FIG. 182c. Section of Ruth's Steam Accumulator.

Amount of Water in a Regenerator. The quantity of water W in pounds required in a regenerator is

$$W = \frac{wr}{.65\ (t_2 - t_1)}$$

where w = total weight of steam "regenerated" per time interval, pounds; r = latent heat at average pressure (usually 971 B.T.U.); t_2 and t_1 the boiling temperatures at the higher and lower pressures in the regenerator. These pressures usually range from 18 to 15 pounds per square inch absolute, although sometimes the pressures may be as low as 12 pounds per square inch absolute.

Low-Pressure Turbines. A steam turbine designed for operation with low-pressure steam has, of course, relatively few rows of blades compared with ordinary high-pressure turbines.

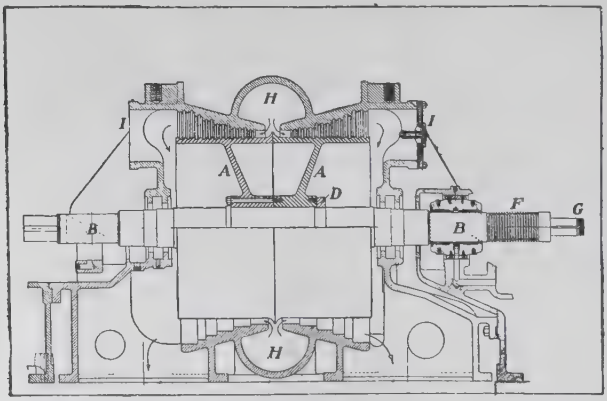

FIG. 184. 1000-kilowatt-Westinghouse Low-Pressure Turbine.

Fig. 184 is a copy of a shop drawing of a 1000-kilowatt **Westinghouse double-flow low-pressure turbine.** The exhaust steam from the engines enters through the annular space **H** and is distributed to the right and left sections of Parsons blading. The upper half of the drawing is a section of the rotor and shows the method of construction. The exhaust is discharged through the base as indicated by arrows. The openings **I, I** are provided for

convenient inspection of the blading. They are covered with suitable covers in which automatic relief valves are fitted.

Economy curves of this turbine are shown in **Fig. 185.** The pressure of the steam delivered to the turbine was approximately atmospheric. The vacuum, as shown by the curves, was $27\frac{1}{2}$ inches for one test and 28 inches for the other.

A Curtis exhaust steam turbine installed in Philadelphia receives the exhaust steam from reciprocating engines at a pressure of 15 to 16 pounds per square inch absolute, and exhausts into a condenser with an average vacuum of 28 inches. The turbine has no governor, but takes all the steam the engines will supply. The output over and above that obtained from

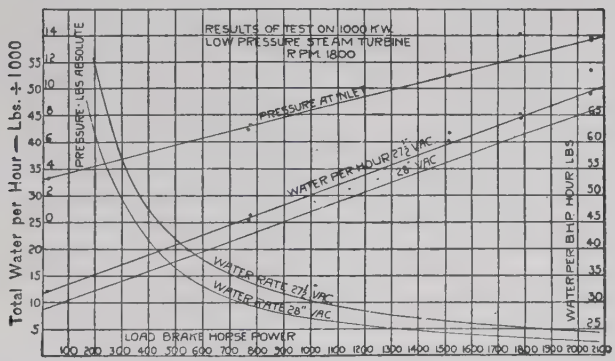
RESULTS OF TEST ON 1000 K.W.
LOW PRESSURE STEAM TURBINE
R.P.M. 1800
Total Water per Hour — Lbs. ÷ 1000
PRESSURE - LBS ABSOLUTE
PRESSURE AT INLET
WATER PER HOUR 27½" VAC
28" VAC
WATER RATE 27½" VAC
WATER RATE 28" VAC
WATER PER B.H.P. HOUR LBS
LOAD BRAKE HORSE POWER

Fig. 185. Curves of Steam Consumption of a 1000-kilowatt Westinghouse Low-Pressure Turbine.

the reciprocating engines is increased about 66 per cent. for the same steam consumption.

Since the exhaust from reciprocating engines is often very wet, it is **good practice to insert a steam separator** in the steam pipe leading to the low-pressure turbine.

Most applications of low-pressure turbines have been made in collieries and steel mills, where non-condensing engines are the rule. Results are, however, so satisfactory that the design of new plants having a compound engine with a smaller low-pressure cylinder than is usually provided, which is to discharge its exhaust into a steam turbine may be successful.

Low-Pressure Steam Turbines Combined with Gas Engines. There is also another field open to the low-pressure steam turbine. The hot cooling water from the jackets of large gas engines could be heated by the exhaust gases, and the low-pressure steam thus formed would drive a steam turbine.

CHAPTER X.

MIXED-PRESSURE TURBINES.

It sometimes happens that there is an available source of low-pressure steam which it is desired to utilize for the development of power, but where unfortunately there is not always at hand a sufficiently large amount of this low-pressure steam to take care of the power requirement. To suit this condition it is not infrequent to provide in a steam turbine a high-pressure section to take steam at boiler pressure and thus help out the low-pressure section when its normal supply of steam is low. In this type of construction when, however, the supply of low-pressure steam is sufficient for the power requirements, the supply of high-pressure steam is cut off entirely by the governor; and on the other hand when the supply of low-pressure steam becomes again sufficient in quantity, no more high-pressure steam is used.

The generous use of live steam in low-pressure steam turbines is not by any means as poor engineering practice as at first thought it appears. The obvious reason for admitting live steam to the turbine is that the supply of low-pressure steam from the engines is insufficient for the turbine requirements, and that consequently some of the engines have been relieved of their load more or less suddenly. The boiler plant continues, however, to make steam at the former rate, and the safety valves will soon blow off unless the excess steam can be used in the power plant. By taking this excess of steam to the turbine to help in carrying its load, which we shall assume has not been reduced, will serve to use this excess of steam to the best possible advantage. It is not an unusual practice even to pipe the discharge from the safety valves on the boilers into the receiver in the low-pressure piping supplying the turbine. These conditions are met most

frequently in the suddenly variable loads in rolling mills and in hoisting operations where the reciprocating engine drives the rolls or hoists and the low-pressure turbine supplies a more or less constant electrical load for both lighting and comparatively light power requirements. If the intervals requiring the use of high-pressure steam are relatively long, as for example five to ten hours on the average, then a so-called **"mixed turbine"** type should be used. The accumulator method is also adaptable for the longer period but is expensive as regards first cost.

The so-called "mixed" steam turbine has been a development of the applications of steam turbines to suit two important conditions of operation which are as follows: (1) the case where a low-pressure turbine is to be used to develop an amount of power for which there is not constantly available a sufficient amount of low-pressure steam to carry the average load; and (2) when there are large enough quantities of low-pressure steam at certain times to carry the load but at more or less long intervals there is no exhaust steam supplied at all. Both of these cases require the supplying of large quantities of steam from sources independent on the exhaust lines and live steam direct from the boilers is invariably the substitute. For this sort of service with widely varying steam pressures the mixed-pressure turbine has found acceptable application. In speaking of a mixed-pressure turbine in this chapter we shall think of one having separate high- and low-pressure portions in a single casing. A good example is shown in **Fig. 185a,** where the high-pressure portion is provided with an impulse wheel which is made easily removable so that when for long periods high-pressure steam is not needed it can be taken off. High-pressure steam enters at the steam chest opposite the nozzles in the "impulse" section. Low-pressure steam enters only the reaction blading through the vertical pipe coming up behind the "reaction" section. Such a turbine differs essentially from the ordinary low-pressure turbine which is provided with its own governor only in having under the control of the governor a special set of valves arranged to supply live steam to nozzles directing steam into a section of

high-pressure blades before discharging through the low-pressure sections along with a supply of low-pressure steam with which it mixes. A very common type of mixed-pressure turbine con-

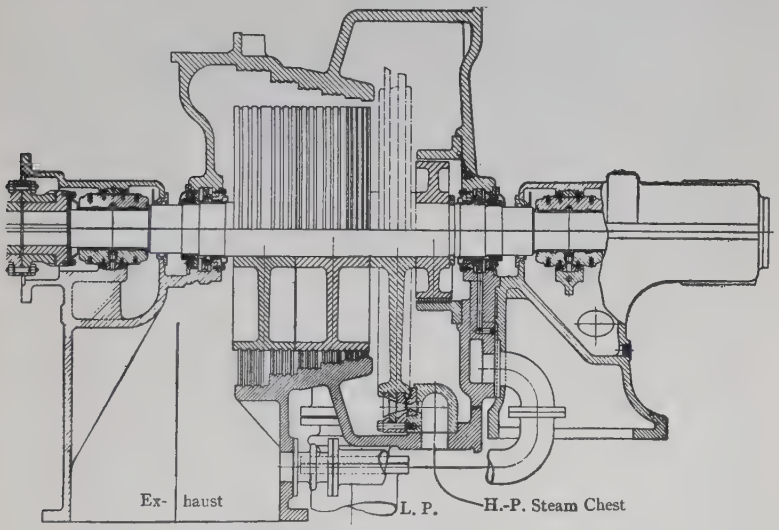

FIG. 185a. Mixed-pressure Turbine.

sists of an impulse wheel in which the energy drop from boiler to about atmospheric pressure is absorbed and the remainder of the energy is taken out by expansion in low-pressure reaction blading. An installation of this kind is illustrated by **Fig. 185b.** The valves under the control of the governor are adjusted so that no high-pressure steam is admitted until the valves on the low-pressure line are wide open. There are often excellent opportunities for the installation of mixed-pressure turbines in conjunction with accumulators; but in every case a check valve must be provided between the accumulator and the turbine in the low-pressure line to prevent live steam getting back into the shell of the accumulator, which will probably not be strong enough to withstand the excessive stresses that might be produced.

In many mixed-pressure turbines the high-pressure section, if of a simple disk construction, is frequently made removable

as in **Fig. 185a,** so that the "windage" loss due to its revolution when not in use can be eliminated. A good estimate is that about 2 per cent. of the power of the turbine is lost in the air resistance of such a high-pressure section.

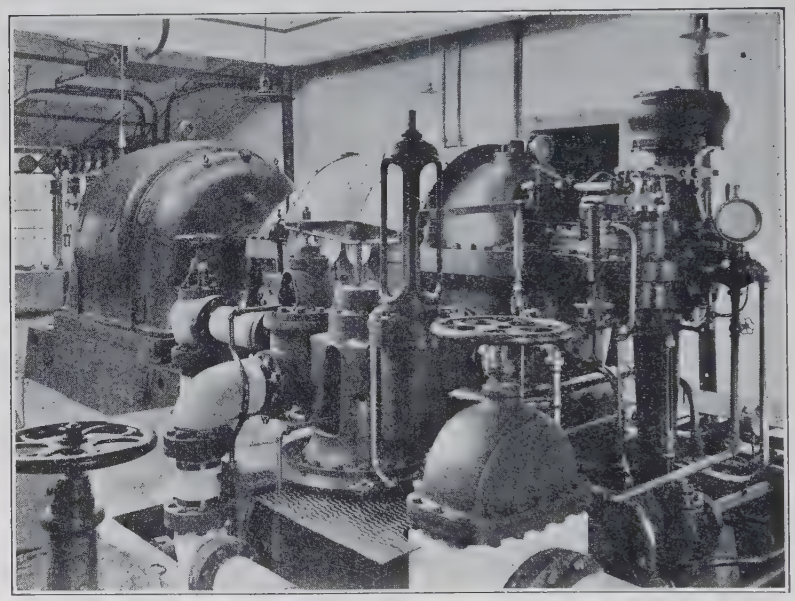

FIG. 185b. Low-pressure Turbine with Live Steam Valve Installed at Peace Dale, R. I.

Mixed-pressure turbines are not often used in sizes larger than about 2000 kilowatts. To meet the requirements of the larger capacities it is best to use a regular or "complete expansion" turbine in combination with a smaller simple low-pressure turbine.

CHAPTER XI

BLEEDER, REGENERATIVE OR EXTRACTION TURBINES.

The name "bleeder," "regenerative" or "extraction" turbine is given to one designed to take steam at boiler pressure and exhaust part of this steam at a normally low vacuum while another part is "extracted" or taken out from one of the stages at a pressure of five to ten pounds per square inch gage pressure; that is, just a little above atmospheric. In many cases, as for example in cotton, woolen, and paper mills, this steam is "extracted" for manufacturing purposes, usually heating water in vats. More commonly, however, such turbines find their application for supplying the low-pressure steam required in a heating system for houses, factories, office buildings, etc. Because this latter supply is needed only a part of the year and otherwise is variable with the seasons, there will be times when the turbine operates by complete expansion of all the steam supplied to it by the boilers. Obviously it is necessary to provide in such turbines a means whereby the "bleeder" steam can be taken out at any time, and with sufficient back pressure even at light loads to maintain a pressure in the section from which the steam is to be withdrawn to overcome the resistances of pipes and valves, so that steam can flow freely as required. It is desirable also that the pressure in this section of the turbine should be fairly constant. To accomplish this result in Westinghouse-Parsons turbines a partition diaphragm has been used to separate completely the high-pressure from the low-pressure portion, as shown in **Fig. 185c.** The steam enters the high-pressure section through admission valve **A** and passes normally out through the bleeder passage and into the mains to be supplied with steam. When the turbine uses more steam than is needed for the service supplied the pressure in these passages "backs

up," and the weight loaded by-pass* valve **V** opens when the pressure exceeds that for which the valve has been set. The steam then flows out into the low-pressure sections of the turbine and thence into the condenser. It is the function of this valve to maintain sufficient pressure in the passages to create the desired flow into the mains. There is usually some throttling action in valves of this type which may cause a slight drop in the available energy of the steam supplied to the low-pressure sections.

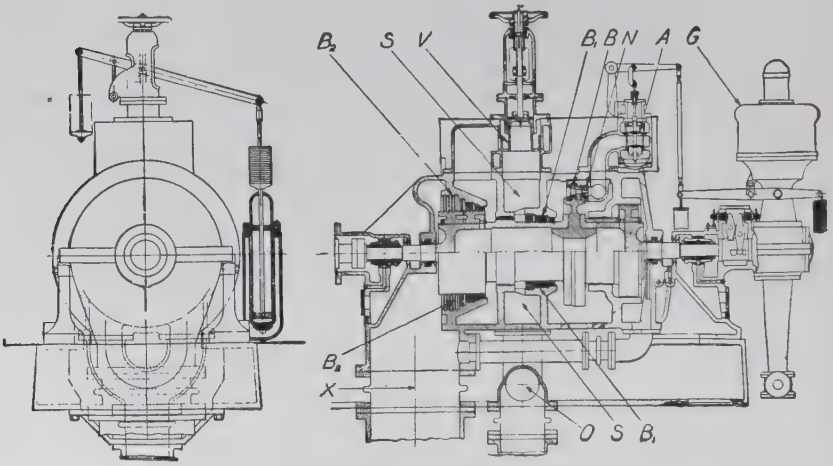

FIG. 185c. Westinghouse-Parsons "Bleeder" Turbine.

To avoid the throttling action, Curtis "bleeder" turbines are designed to regulate the flow of steam by the use of ring-shaped valve over the nozzles leading **from** the stage from which the steam is to be "extracted." This valve is operated automatically by a mechanism responsive to the pressure in the stage so that the effective area of the nozzles is changed as required to maintain a constant pressure. By this method the closing of the nozzles occurs only in groups, so that any slight throttling action that might occur due to partial opening would create its loss only in a small group rather than in all the nozzles

* Similar to a relief or safety valve in its action.

in the stage; those not throttled would be either closed off entirely or else wide open.

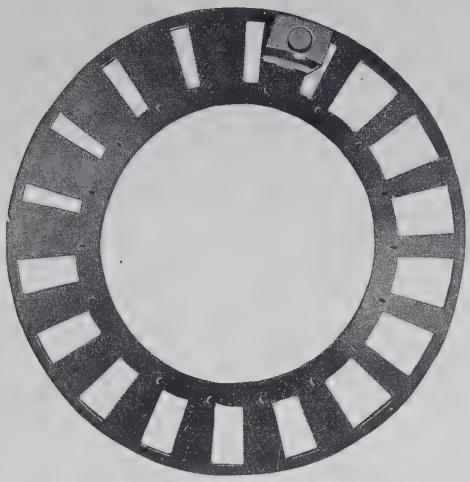

FIG. 185d. Ring Valve of Curtis Bleeder Turbine.

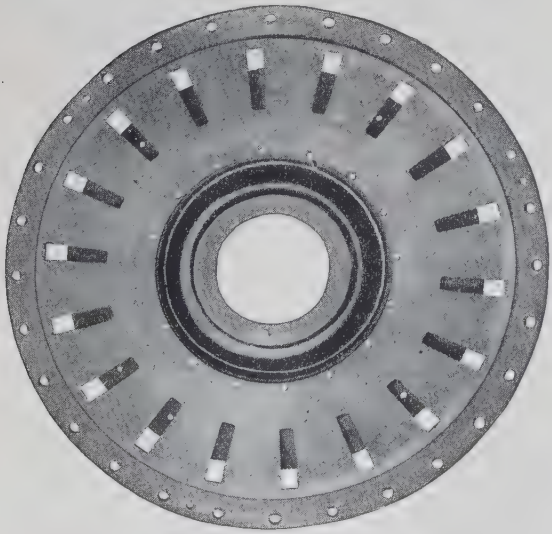

FIG. 185e. Side of Diaphragm of Bleeder Turbine.

Parts of this device are illustrated by the following figures: **Fig. 185d** shows the ring valve used for covering the nozzles

which are bolted in the usual construction to the side of the diaphragm (**Fig. 185e**). This valve is operated by the piston in an oil (or steam) cylinder which is in turn moved by being subjected to oil or (steam) under pressure admitted from a high-pressure supply by a small pilot valve actuated by leverage connections to the diaphragm (30) in communication by small piping with the stage in which the constant pressure is to be maintained. **Fig. 185f** shows a cross-sectional view of the mechan-

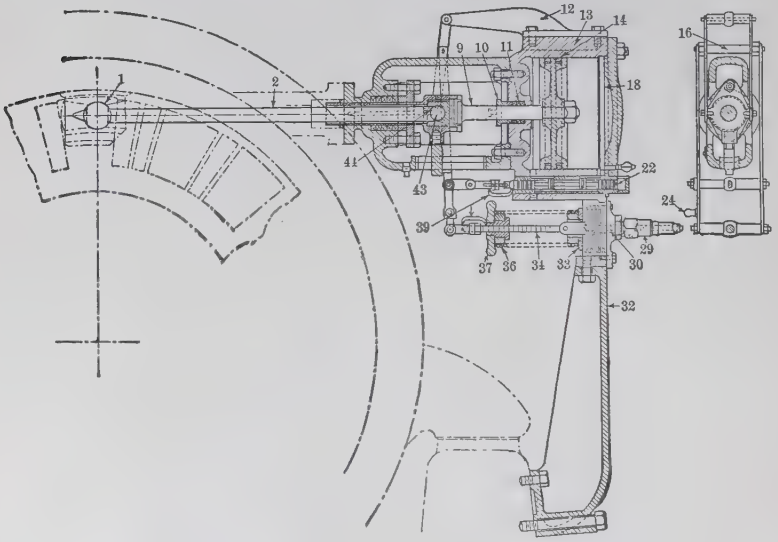

Fig. 185f. Valve Gear of Curtis Bleeder Turbine.

ism which actuates the valve. By means of a flexible joint at (1) the piston rod (2) moves the valve plate back and forth over the face of the nozzles. Pressure on the piston (14) in the oil (or steam) cylinder (13) gives the movement to the piston rod. Movements of the piston are effected by means of the pilot valve (22) which is in turn actuated by the diaphragm (30) by means of the rods (34) and (39). This diaphragm with its "corrugated" or "accordion" sides forms a cylindrical chamber which is in communication by means of small piping with the stage to be controlled, and from which the "bleeder" steam is to be taken.

Movements of the diaphragm are opposed by the spiral spring (36) which can be set to maintain any desired steam pressure in the stage.

Careful inspection of **Fig. 185d** shows that the ports in the ring valve are not all of the same size but are of progressively increasing width around the circumference from the narrowest to the largest. The narrow parts begin closing up on the first movement of the valve. There are four groups. The second group begins closing only after the first or narrowest set is fully closed.

A balance-plate (**Fig. 185g**) is put on top of the ring valve (**Fig. 185d**) for the purpose of assisting in equalizing the pressure on the two sides of the valve, and thus reducing the force required to move it, since the steam pressure is not effective on the whole surface of the ring valve.

Fig. 185g. Balance-plate for Curtis Ring Valve.

It is comparatively a very easy matter to remove some of the steam which has been partly expanded in the turbine by the use of suitable automatic or hand-controlled valves even when the quantity of steam required at a constant pressure in such a bleeder line is quite variable. By this method it is possible to

extract the greatest amount normally possible as required for generating power and at the same time supplying at a reasonably constant pressure " usually about atmospheric," or about 5 pounds above, the requirements for heating or industrial purposes.

Design of Large Steam Turbines for Bleeding Operation. Large steam turbines which are not intended for use of economizers for heating the feeding water of the boilers are quite generally operated by the method of extracting or bleeding steam from the casing at 2, 3, or 4 points, the pressure at each point of extraction or bleeding being different. In extensions to steam power plants already equipped for operation with economizers the turbines are generally designed for the extraction or bleeding of steam at two instead of the larger numbers of points mentioned. The general tendency however is to increase the number of extractions or bleeding points to three or four when economizers are not provided, while in new installations for very high pressures five bleeding or extraction points are sometimes used; although in many cases it is doubtful if there is any gain in the economy of the unit by the use of heaters to " **regenerate** " the steam above the fourth point of bleeding or extraction.

In some cases steam turbines are not designed to give the best results with bleeding or extraction operation for the reason that the guarantees are usually made on the basis of non-bleeding service. Many purchasers of large steam turbines specify that the casings shall have a certain number of bleeding or extraction points, and require the guarantees to be made on operation with no bleeding or extraction of steam, so that the manufacturer will naturally design the blading in the proper proportions for the guaranteed conditions.

The bleeding or extraction of steam at the various points in the operation of the turbine changes the distribution of steam pressures in the blading by lowering the pressure in the stages from which steam is removed and also in the subsequent stages. This change of the pressure from the designed conditions obviously causes a loss which continues through the whole operating

life of the turbine; and while this loss is not as a rule very large, it is of enough significance to warrant the designing of turbines for bleeding or extraction operation for the actual conditions of service.

It is sometimes claimed that one of the principal gains from bleeding or extraction of steam from the stages of a turbine is the removal of a part of the water of condensation when the steam is wet, and the stages of the turbines following the point of bleeding or extraction should operate at higher efficiency because of the removal of moisture. It is a general opinion of operating engineers, however, that it is possible to remove very little of the moisture from the steam by a method of extraction or bleeding. There are some cases where apparently the steam flowing through the stages has been made drier by bleeding or extraction; and it was observed that there was a slight pitting on the blades on the high-pressure side of the bleeding or extraction point and no pitting on the blades toward the low-pressure end.

When steam is taken from the casing by bleeding or extraction and passed through heaters to be used in later stages as **"regenerative" steam** the output of the turbine is in most cases less than it would be without the **bleeding and the return of the steam.** Because of this falling off of capacity it is customary at times of "peak" load, to operate such turbines without bleeding or extraction so that all the steam entering at the high-pressure end discharges through all the stages and in this way the maximum capacity of the machine is usually increased from two to ten per cent.

The steam turbines which are arranged for the bleeding or extraction of steam which is to be returned again to a lower-pressure stage in the turbine after passing through a heater requires a compensating device on the governor to adjust the admission of high-pressure steam. **Fig. 185h** shows the operating mechanisms for adjusting the pressures in two of the stages from which steam is removed.

Fig. 185i shows a sectional view of a double bleeder or extraction steam turbine designed for operation with a steam

accumulator (see page 355). The high-pressure steam from the boilers is admitted to the high-pressure section of the steam turbine at the left-hand side at a gage pressure of 300 pounds per square inch. When high-pressure steam has passed through six stages and the gage pressure is reduced to 145 pounds per square inch, a considerable amount of steam is removed from the

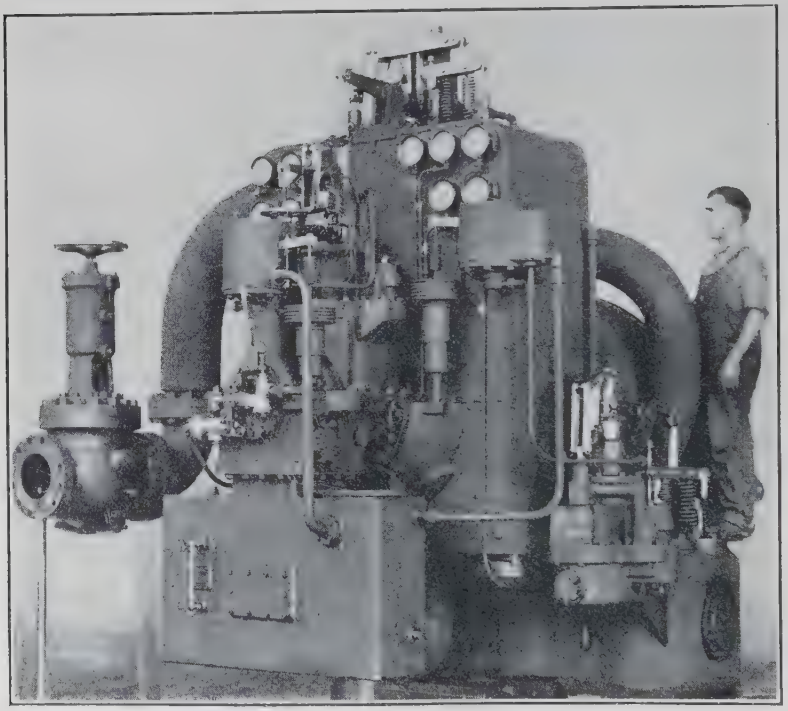

Fig. 185h. Governing and Compensating Devices of Regenerative Turbine.

casing by bleeding or extraction through the valve shown at the top of the figure. The remainder of the steam flows through a second section of the turbine and when the steam pressure is reduced to about 50 pounds per square inch, an additional amount of steam is removed by bleeding or extraction. In the operation of this turbine only the first and second sections of the high-pressure turbine shown at the left-hand side of the figure are

used. When, however, a greater amount of electric power than can be developed in these two sections is needed, additional power is obtained by passing all or a large part of the steam from the second section into the lower-pressure turbine at the right-hand side of the figure; and under these circumstances, very little steam will be removed by bleeding or extraction.

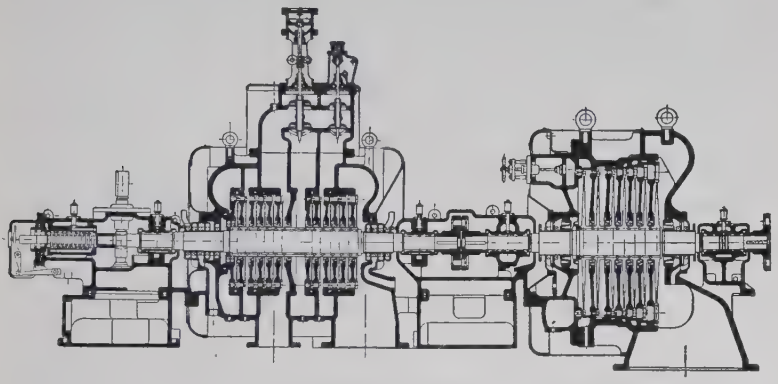

Fig. 185i. Two-unit Extraction Turbine with Automatic Control.

Automatically Operated Extraction Turbines for Manufacturing Plants. In spite of the general tendency to obtain the power for manufacturing plants by transmission from large central generating stations, there is a certain class of manufacturing plant which still continues to generate its own power more profitably than it can be purchased. Because of the importance of this kind of service, manufacturers of steam turbines have found it necessary to change many of their designs in order to provide adequately for the use of the waste heat in the form of exhaust steam for process work. The decisions of the engineers who select the mechanical equipment for factory power plants cannot be based on a general rule in order that a power plant of this kind can justify its existence. It must be economical in the joint production of heat in the form of steam, and the electric current required for power purposes. In other words, industrial plants requiring large amounts of steam for process services can usually be operated more cheaply by gen-

erating their own electric power than by purchasing it. On the other hand, in most cases it is not profitable to install a plant with steam turbine equipment for the purpose of generating electric power for use in the plant if the exhaust steam is to be used only for heating the buildings. When, however, there is a considerable demand, aside from the heating requirements, for exhaust and extracted steam for process services in manufacturing, it is possible to obtain for the whole plant a higher economy than by the largest and most efficient condensing unit now employed in central stations. The radiation loss from extraction turbines is not nearly as large as claimed by some designers. Actually, this loss is less than one per cent. in well-designed machines, and is about equal to the bearing friction loss of the turbine. Electric losses in the generator will be about 4 or 5 per cent.

Extraction turbines can be made with a number of stages for condensing or non-condensing service, and steam extraction can be arranged at different points. A condensing double-extraction unit like the one shown in **Fig. 185i** can be regulated in several ways. Automatic control of the load, pressure and quantities of exhaust or extracted steam has been successfully applied to meet many typical conditions of service. The simplest form of automatic control is by the method of maintaining a constant pressure at the extraction opening, being accomplished by a pressure regulator controlling through a piston the amount of opening of the valve through which the extraction steam must pass. When a heater is used in connection with extraction steam, the temperature in it can be controlled by a thermal relay. The exhaust pressure can be regulated by controlling either the pressure or the quantity of steam extracted at higher pressures. The combination of two turbines as shown in the figure when arranged to exhaust at both a high pressure and a low pressure, can be used to maintain a constant pressure at either turbine by shifting the load from one unit to the other.

CHAPTER XII.

MARINE TURBINES.

One of the most important fields for the steam turbine is the propulsion of ships. In the mercantile marine the progress of the turbine had been extremely rapid, the first mercantile vessel propelled by turbines having been built only a very few years ago. That vessel had about 700 tons displacement, and developed 3500 indicated horsepower, comparing with a tonnage of 45,000 and 70,000 horsepower in the *Lusitania* and *Mauretania*. Careful trials had shown that at all speeds above 14 knots the turbine was more economical than the reciprocating engine, being 15 per cent. better at 18 knots, 31 per cent. better at 20½ knots, and 36 per cent. better at 20.1 knots. In the Dover-Calais service it had been found that the turbine boats carried passengers at two knots greater speed with 25 per cent. less coal per passenger than boats propelled with reciprocating engines. A saving in coal of about 9 per cent. was computed for the turbine steamers belonging to the Midland Railway (England), as compared with similar steamers of the same company equipped with reciprocating engines. The difference in initial cost and in weight of machinery was found to favor the turbine driven ships by 1½ and 6 per cent. respectively. When used for marine service, doubtless the greatest defect of practical steam turbines is that they cannot be reversed. Many attempts have been made to devise a turbine to reverse in a simple way comparable with a reversing reciprocating engine. It is the present practice to provide turbine driven ships with two turbines used only for reversing, and as they are not intended for high speed, they may be of small power compared with the main turbines. These two reversing turbines are usually fitted to the same shafts as the low-pressure turbines, and when the ship is running ahead their rotors revolve idly in a vacuum.

When the ship is to be run backward the steam is shut off from the "ahead" turbines and is admitted to the auxiliary reversing turbines. There is, of course, a disadvantage from not having at times the full normal motive power of the ship available for backing. Besides, conditions are not ideal when a large portion of the plant is idle for a greater part of the time. These reversing turbines will occupy a great deal of longitudinal space, so that the floor space required for an installation of marine steam turbines is larger than that required for reciprocating engines for the same conditions of service.

The White Star Company (International Mercantile Marine Company) has decided to operate ocean steamers with a combined reciprocating and turbine engine plant. The two outer shafts are driven by quadruple expansion reciprocating engines and the central shaft by a low-pressure turbine operated by the exhaust steam from the low-pressure cylinder of the reciprocating engines. For going backward, the reciprocating engines are used, as they are readily reversed, and in the ordinary service the turbine and reciprocating engines are operated together. By this combination the advantages of reciprocating engines for reversing are secured, together with the great range of expansion which is possible with the steam turbine.

It is difficult to say what developments the future will bring in the applications of steam and gas turbines to the marine service. Practically all the new battleships and cruisers for the American and British navies are now turbine driven. If we consider that the steam turbine commenced its real development only in 1885, the future certainly may have rich possibilities.*

Fig. 185j represents the results of tests made at variable speeds and powers on a standard combined impulse and reaction type of turbine. In explaining the results of these tests Mr. H. T. Herr states that investigations now under way by the "Westinghouse interests" will insure the elimination in the near future of the reciprocating engine in the field of marine propul-

* Complete and detailed discussions of the Curtis and Parson types of marine steam turbines and speed reduction gears are given in *Marine Steam Turbines*, by the author, published by John Wiley & Sons, New York.

sion as the turbine generator has practically eliminated it for electric power plant service.

On account of the difficulty of adjusting the inherent requirements of the steam turbine for operation at relatively high rotative speed and the corresponding difficulty, opposite however, in effect, of the efficient operation of the propellers of steamships at anything but relatively low speed, the applications of steam turbines to the propulsion of ships has been very much limited. If it were not for these difficulties there is no reason why the steam turbine should not displace the recipro-

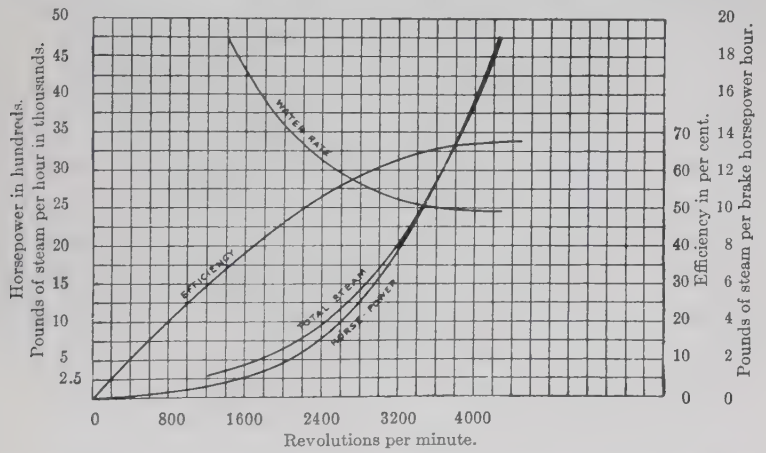

FIG. 185j. Curves Showing Variation of Steam Consumption, Horsepower, and Efficiency of Latest Designs of Steam Turbines with Speed.

cating steam engine almost entirely for this service. On this account, however, the application has been confined almost entirely to merchant and naval vessels designed for high-speed service. Experience has shown that in the applications of steam turbines to slow-speed ships there has been no appreciable saving in weight, in space, or in the cost of operation, over what it would have been with reciprocating engines. The nearest approach to the solution of this problem is to be secured probably by the application of gearing essentially similar to that designed by De Laval. This sort of gearing cannot, however,

be applied without modification to turbines developing more than possibly 1000 horsepower. A design much better suited to high-speed conditions and also adaptable for large power has been developed by the Westinghouse Machine Company with the coöperation of Mr. George Westinghouse, Admiral George Melville, and Mr. John H. Macalpine. The essential principle embodied in their improvements consists in the application of a so-called "**floating frame**" designed to carry the pinion on the main turbine shaft. The experimental gear developed in the early stages had a floating frame supported on pivots, permitting flexibility as regards horizontal movement of the pinion, but was rigid as regards vertical movements. Very recently Mr. Westinghouse developed a very important improvement consisting in the substitution of a flexible support by means of hydraulic pistons taking the place of the rigid vertical supports, and in this way improving very much the efficiency and the wearing properties of the gear. This improvement in wearing properties had also the effect of reducing to a minimum all noise and vibration which in the original design were considerable. In this later design (**Figs. 185k and l**), the main frame supporting the pinion is held up by the pistons in the hydraulic cylinders filled with oil under pressure. This construction permits vertical movements of the pinion along with its flexibility in its floating frame and is therefore a great improvement in that the earlier design permitted only lateral movement. The vertical movement is permitted by the supporting of the floating frame on the piston connected to the supporting rods. Similarly the lateral movement is permitted by the flexibility of the horizontal pistons on the two sides of the pinion.

For a more complete description and discussion of the "floating frame" type of reduction gear see *Engineering*, vol. 95, pages 169 and 609.

Water rate curves drawn from the data of acceptance tests of the battleships *North Dakota* and *Delaware* are shown in **Fig. 185m.** Curves **A** and B_1 show the steam consumption per

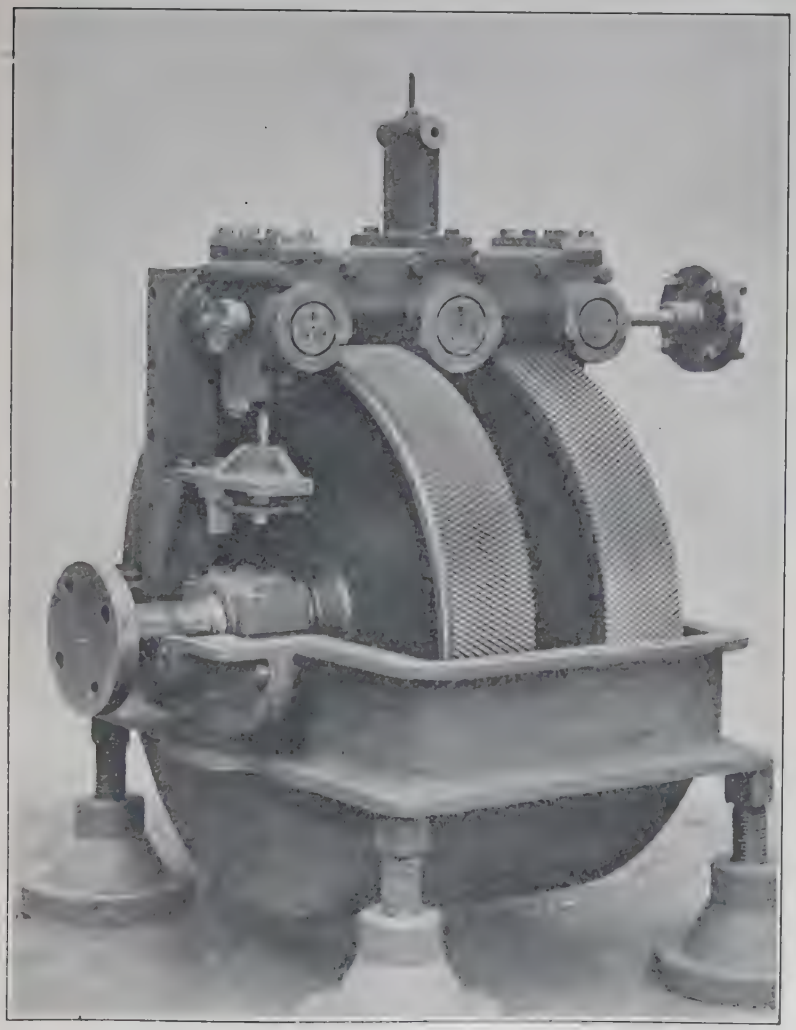

FIG. 185k. "Floating Frame" Reduction Gear, Showing Gears when Side of Casing is Removed.

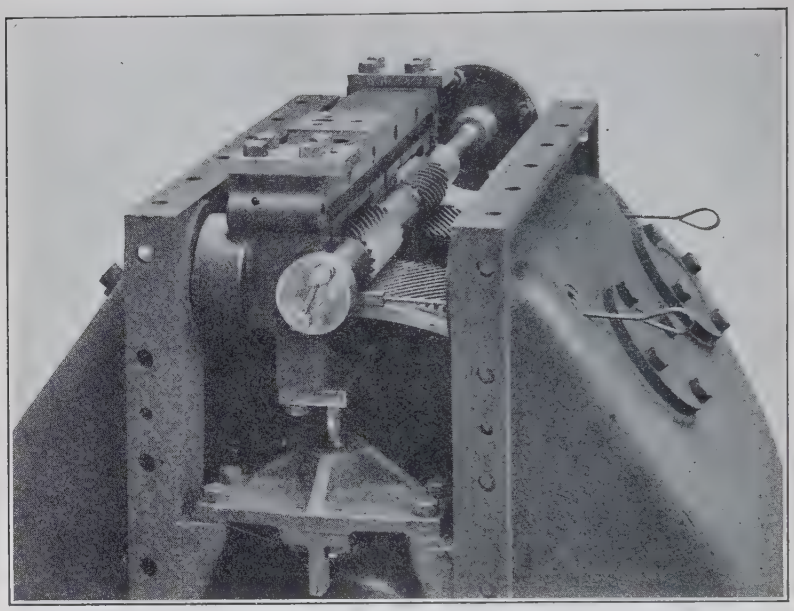

FIG. 185l. Reduction Gear, Showing Flexible Support of Pinion.

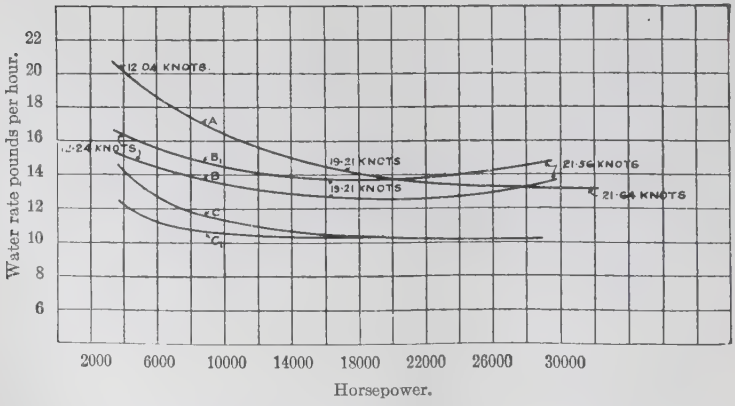

FIG. 185m. Water Rate Curves of U. S. Battleships and Computed Curves if Geared Steam Turbines were used.

shaft horsepower per hour of the engines in the two battleships, while **C** and C_1 show the corresponding results if **geared** turbines had been used instead of reciprocating engines. It is estimated that with a geared turbine combination of the Westinghouse " floating frame " type the economy of the prime movers in vessels of the *Delaware* class could be improved 30 per cent. at full speed and 25 per cent. at cruising speed. **Fig. 185n**

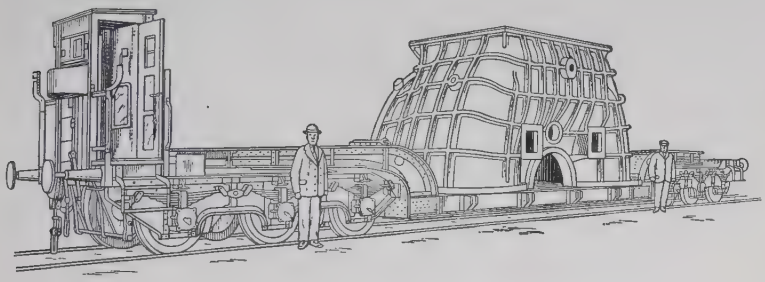

Fig. 185n. Low-pressure Turbine Casing for Passenger Steamship.

shows the enormous size of the casings for the low-pressure sections of the steam turbines installed in modern battleships.

Electrical Transmission for Ships. Another method different from the use of reduction gears has been applied for making the steam turbine more adaptable for marine service. This method consists in using on the vessel steam turbines direct connected to high-speed electric generators, which can operate then under practically identical conditions as in " land " service. These turbines, obviously, can be designed to operate at a speed best suited to obtain high efficiency. The electric current from the generators is used to drive slow-speed electric motors on the shafts of the propellers, the speed here being that giving best efficiency for the propellers. This method offers great flexibility in the handling of a vessel, as the motors can be very quickly reversed, and changes of speed are readily obtainable.

The application of electricity to the propulsion of ships is best suited to very large vessels requiring good fuel economy at two or more speeds. High powered warships are typical and probably the best examples. When, as in the ordinary merchant service, steamships operate practically continuously at a constant pre-determined speed, the transmission of power from the steam turbines to the propellers can be done most economically by a mechanical means, instead of by generating electricity in electric generators attached to the turbines and then using this electricity to drive electric motors connected to the propellers. In the operation of warships, however, it is necessary to design the power transmission apparatus so as to be able to maintain the maximum speed of the warship for a long time, and yet in order to establish reasonably economical conditions of service, it will be necessary to devise a means by which the ship can be operated at a moderate cruising speed without great loss. For these conditions, the electric method of power transmission is by far the best yet devised.

The fundamental principles of electric machines upon which this kind of service depends is that the speed of the alternating current motors is inversely as the number of electro magnets operating as poles. For example, if in an electric motor there are thirty-two poles and in the generator there are two poles, the speed of the motor is one-sixteenth of that of the generator. Now in the application of the electrical method, it can be arranged so that by throwing a switch there will be sixteen poles, or thirty-two poles, or sixty-four poles operative on the motor. When it is required to drive the propellers at low speed which is the top speed of the ship, a switch is moved to have a certain number of poles at the motor corresponding to the speed. The poles in the generator remain fixed in number and there is no change. One of the important advantages claimed for the electric method is that one-half of the motive power of the ship can be destroyed, and if the other half still remains operative, it will be possible to drive the ship at a very good cruising speed. Electric transmission thus makes possible the

use of a plurality of cruising and generating units so that damage to one or more parts will not disable the vessel. According to official data, it is shown that the electrical method of transmission costs considerably less than the mechanical and that electrically driven battleships are much more economical than those driven by other methods. Relative costs are shown by comparison of the contract price for prime movers and electrical propelling machinery for the battleship New Mexico, which was only a little more than $431,000, while the lowest price given for similar equipment for mechanical transmission was about $600,000.

The electrical method gives a very simple means for the reversal of the propellers on a ship, by merely changing electrical connections without mechanical devices such as complicated piping, valves, etc., ordinarily needed when there is direct mechanical connection between the prime mover and the propeller. The usual methods of reversing the propellers when driven by steam turbines with mechanical transmission results in low efficiency. The electrical method, on the other hand, gives full reversing power without affecting the efficiency of the equipment in the forward direction.

Large steam turbines together with direct-connected generators, such as would be used on warships, give efficiencies based on the available energy in the steam of over 80 per cent. The electric motors have, on the average, an efficiency of about 95 per cent. for this kind of service, and if we assume a boiler efficiency of 80 per cent. the coal consumption would be only 0.825 pound per shaft horse-power per hour, as calculated for coal containing about fourteen thousand British thermal units per pound. It should be noted in this connection that this figure compares favorably with the operation of Diesel oil engines when the necessary lubricating oil for such engines is taken into account.

Some good data are now available as to the relative weight of prime movers and other propelling machinery for vessels equipped with (1) reciprocating steam engines, (2) steam tur-

bines transmitting their power to propellers through gearing, (3) steam turbines transmitting their power to propellers by electrical means. These data show that the weight is approximately the same for the last two methods, but is nearly 100 per cent. greater for an installation using reciprocating steam engines. Taking as a basis of comparison the equipment with steam turbines with electrical propelling machinery, the steam consumption of the steam turbines with mechanical propelling machinery is about 20 per cent. greater and for reciprocating engines is about 25 per cent. greater.

In order to be able to correctly judge the relative economy of different methods of propulsion, it may be interesting to compare the water rate per effective horsepower, taking for examples the battleships *Florida* and *Utah*, which are equipped with Parsons turbines; the *Delaware*, which has reciprocating engines, and the *New Mexico*, with electric drive.

	Propeller Speed.	Water Rate per Effective Horsepower per Hour. (Corrected for propeller losses.)		
		12 Knots.	19 Knots.	21 Knots.
Florida	328	31.8	24.0	23.0
Utah	323	28.7	20.3	21.0
Delaware	122	22.0	18.7	21.0
New Mexico	175	17.3	15.0	16.4

The new battle cruisers of the United States Navy are designed to have a speed of 35 knots, at which speed each requires about 180,000 horsepower. There are four propellers operating at 250 revolutions per minute at maximum speed. The installation for these ships consists of four high-speed turbine-generators, each having a capacity of about 35,000 kilowatts. On each propeller shaft there are two independent induction motors, each having a capacity of 22,500 horsepower. The switchboard is arranged so that any combination of generating units and motors can be used.

CHAPTER XIII.

TESTS OF STEAM TURBINES.

Testing Steam Turbines.* In every power plant the means should always be available for making tests of the steam equipment to determine the steam consumption. Usually tests are made to determine how nearly the performance of a turbine approaches the conditions for which it was designed. The results obtained from tests of a turbine are to show usually the steam consumption required to develop a unit of power in a unit of time, as, for example, a horsepower-hour or a kilowatt-hour.

In such tests a number of observations must be made regarding the condition of the steam in its passage through the turbine and of the performance of the turbine as a machine. To get a good idea of what these observations mean, it may be profitable to follow the steam as it passes through the turbine. The steam comes from the boilers through the main steam pipe and the valves of the turbine to the nozzles or stationary blades as the case may be. It then passes through the blades and finally escapes through the exhaust pipe to the condenser. It is preferable to have a surface condenser for tests so that the exhaust steam can be weighed. The weighing is done usually in large tanks mounted on platform scales.

Methods for Testing. The important observations to be made in steam turbine tests are:

1. Pressure of the steam supplied to the turbine.

2. Speed of rotation of the turbine shaft, usually taken in revolutions per minute.

3. Measurement of power with a Prony or a water brake, if the power at the turbine shaft is desired; or with electrical instruments (ammeters, voltmeters, and wattmeters), if the power is measured by the output of an electric generator.

* For complete and detailed information regarding the testing of steam turbines and other prime movers, as well as the revised codes of testing adopted by the American Society of Mechanical Engineers, see *Power Plant Testing*, Third Edition, pages 354–386, by the author (McGraw-Hill Book Co., N. Y.).

4. Weight, or measurement by volume, of the condensed steam discharged from the condenser. Unless a surface condenser is used it is very difficult to obtain the amount of steam used by the turbine. All leakages from pipes, pumps, and valves, which is part of the steam which has gone through the turbine, must be added to the weight of the condensed steam. The accuracy of a test often depends a great deal on how accurately leaks have been provided against, or measured when they occur.

5. Temperature of the steam as it enters the turbine. If the temperature is higher than that due to the pressure of the saturated steam given in steam tables, the steam is superheated; if, however, the temperature is not higher the steam may be wet, and a calorimeter must be attached as near the turbine steam chest as possible.*

6. Vacuum or back-pressure.

All gauges, electrical instruments, and thermometers should be carefully calibrated before and after each test so that observations can be corrected for any errors. The zero readings of Prony and water brakes for measuring power should be carefully observed and corrected to eliminate the friction of the apparatus with no load. Unless all these precautions are taken the difficulties in getting reliable tests of turbines are greatly increased. In all cases tests should be continued for several hours with absolutely constant conditions if the tests are to be of value.

The most valuable test of a steam turbine is made when varying only the load; that is, with pressures, superheat, and speed constant. When the steam consumption is then plotted against fractions of full load, a **water-rate curve** is obtained. For such a curve a series of tests are needed, each for some fraction of full load; and in each separate test the power as well as all the other conditions must be held constant.

* The most satisfactory tests of turbines are made with steam slightly superheated rather than wet. When steam is very wet (more than about 4 per cent. moisture for ordinary pressures) the determination of the quality is difficult. There is also a danger that steam showing only a few degrees of superheat by the reading of the thermometer is actually wet. The high temperature is due in such cases to heating from eddies around the thermometer case or in steam pockets near it.

Another important test of the performance of steam turbines is made by varying both the speed and the power and keeping the other conditions constant. The observations of speed and power from such a test give a power parabola as illustrated in Fig. 80. This curve shows at what speed the turbine gives the greatest output.

For complete tests of a steam turbine the steam consumption should be determined at full load (1) with varying initial steam pressure; (2) with varying vacuum; and (3) with varying superheat.

A complete set of tests as outlined will give sufficient data to determine all the corrections usually required.

Commercial Testing. The methods used by the New York Edison Company in commercial tests of steam turbine-generator units may well be explained briefly.

During a test the load on the turbine unit is maintained as constant as possible by "remote control" of the turbine governor by the switchboard operator. The maximum variation in load is to be held within 4 per cent. above and below the mean. For some time previous to the test the turbine is run a little below the load required for the test, but at least ten minutes before the starting signal is given the test load must be on the machine.

Three-phase electrical load is measured by the two-wattmeter method,* using Weston indicating wattmeters of the standard laboratory type. These instruments are calibrated by a well-known testing laboratory immediately before and after the test. Power factor is maintained substantially at unity and all electrical readings are taken at one-minute intervals.

When the turbine is provided with a surface condenser, the steam consumption, or water rate, is determined by weighing in a large tank supported on platform scales the condensed steam delivered from the condenser hot well. Above the weighing tank a reservoir is provided which is large enough to hold the condensation accumulating between the weighings which are made at intervals of five minutes. By using a loop connection

* See Mark's *Mechanical Engineers' Handbook*, 2d Edition, page 1682; Kent's *Mechanical Engineer's Handbook*, 10th edition, page 2026, or Foster's *Electrical Engineer's Pocket-Book*.

for the gland water supply (of Westinghouse turbines) or the water from the step bearing (of Curtis turbines using water for this bearing) the necessity for correcting the weighings for these amounts is avoided.

Because the circulating water at the stations of this company is usually quite salt, any condenser leakage is detected by testing the condensed steam by the silver-nitrate method with a suitable color indicator. This color method is said to be a decided advantage over the usual method of weighing the leakage accumulating during a definite period when the condenser is idle and is tested for only one particular vacuum. By taking samples of circulating water and condensed steam at the same time, it is possible to detect any change in the rate of condenser leakage.

The water level in the hot well is maintained at practically a constant point by means of a float valve in the well automatically controlling the speed and, therefore, the amount of the delivery of the hot-well pump. This device avoids the necessity for the difficult correction to be made in a test when the levels in the hot well are not the same at the beginning and end of a test. Temperatures and pressures of the admission steam are determined by mercury thermometers and pressure gauges located near the main throttle valve of the turbine; the amount of superheat is determined by subtracting from the actual steam temperature after making thermometer corrections the temperature of saturated steam corresponding to the pressure at the point where the temperature is measured. All gauges and thermometers are calibrated before and after the test.

Vacuum is measured directly at the turbine exhaust by means of a mercury column with a barometer alongside for reducing the vacuum to standard barometer conditions (30 inches). By this latter arrangement the necessity for temperature corrections which are necessary when the two mercury columns are not at the same place is avoided.

Fig. 188 shows a 5500-kilowatt Westinghouse-Parsons turbine set up for testing in the shops before shipment to the customer.

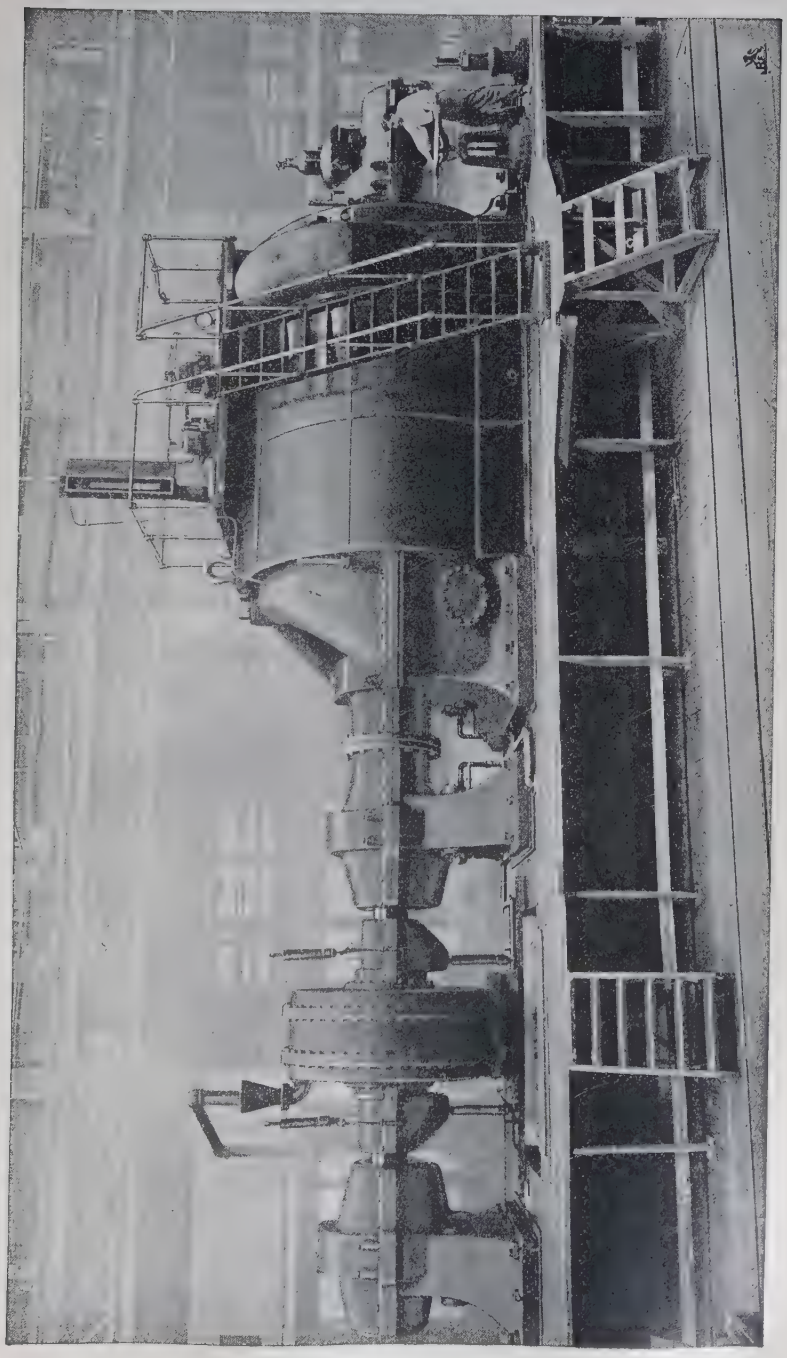

FIG. 188. Westinghouse Turbine Fitted for Testing with a Water Brake.

The power is measured by means of a large water brake shown in the figure at the left of the turbine.

Reports of Tests. The tables given below have been prepared to show the steam consumption, together with the most important other data, of what are believed to be reliable tests of standard makes of steam turbines. The vacuum given in the tables is the equivalent referred to 30 inches barometer.

Curtis Turbines. The following results were obtained by Messrs. Sargent and Lundy with a 2000-kilowatt Curtis turbine-generator.

Kilowatts.	Steam Pressure (Gauge).	Superheat, Deg. F.	Vacuum, Inches.	Pounds per Kilowatt-hour.
555	155.5	204	28.5	18.09
1067	170.2	120	28.4	16.31
2024	166.3	207	28.5	15.02

Also the following results are reported with a 9000-kilowatt turbine-generator in Chicago:

Kilowatts.	Steam Pressure (Gauge).	Superheat, Deg. F.	Vacuum, Inches.	Pounds per Kilowatt-hour.
5,374	182	133	29.43	13.15
8,070	179	116	29.35	13.00
10,186	176	147	29.47	12.90
13,900	198	140	29.31	13.60

Tests of 30,000-Kilowatt Westinghouse and Curtis Turbines. The following tests of a 30,000-kilowatt cross-compound Westinghouse turbine is given as reported by Stott & Finley:*

Kilowatts.	Steam Pressure (Absolute).	Superheat, Deg. F.	Vacuum, Inches.	Pounds per Kilowatt-hour.
16,342	224.2	101.6	28.41	11.77
20,472	220.4	121.0	28.58	11.47
26,740	224.0	108.5	28.86	11.26
30,232	220.3	123.0	28.78	11.41

* *Transactions, American Society of Mechanical Engineers*, vol. 38, page 655.

Below is also a table of the tests of a 30,000-kilowatt Curtis turbine, as reported by H. B. Reynolds.† This Curtis turbine should more properly be called a Curtis-Rateau turbine, as it consisted of 20 stages. The steam consumption has been corrected to standard conditions of 225 pounds per square inch absolute pressure, 150 degrees Fahr. superheat, and 29 inches of vacuum, referred to 30 inches barometer.

Kilowatts.	Actual Steam Conditions.			Total Condensate, Pounds per Hour.	Corrected Condensate to Standard Condition, Pounds per Hour.	Pounds per Kilowatt-Hour.
	Steam Pressure (Absolute).	Temp. at Throttle, Deg. F.	Vacuum, Inches.			
13,985	237	551	29.00	163,047	164,262	11.75
18,243	227	546	28.96	205,723	205,682	11.28
24,159	228	514	29.01	274,292	266,912	11.05
30,470	223	514	29.02	351,675	342,663	11.25
34,448	224	498	28.96	407,232	388,877	11.29
No load	234	502	27.93	16,090	.....	.....

Test of 60,000-Kilowatt Turbine. The following is a test of a Westinghouse three cylinder steam turbine as reported in *Power*, April 1, 1919. Operating conditions were as follows: Steam pressure, 275 pounds per square inch gage; 175 degrees Fahrenheit superheat; 28½ inches vacuum, referred to a 30-inch barometer:

Load, kilowatts.....30,000 40,000 50,000 60,000
Steam, per kilowatt-hour, lbs... 11.55 11.15 10.90 11.10

B.T.U. per K.W.-hr. at best load = 13,200. Thermal efficiency at best load based on K.W. = 3413 ÷ 13,200 = 25.85 per cent.

Tests of Ljungstrom Turbines. The following tests of a Ljungstrom turbine, made in England by Captain Riall Sankey, gives the results of a test of a 1500-kilowatt unit:

† *Transactions, American Society of Mechanical Engineers*, vol. 43, page 113.

	Test No. 1	Test No. 2
Duration of test	1 hr. 40 min	2 hr. 40 min.
Steam pressure before throttle valve, lb. per sq. in. gage	208	206
Steam temperature before throttle valve, deg. F.	583	569
Condenser back pressure, lb. per sq. in. abs.	0.68	0.64
Load, kilowatts	1,469	1,492
Steam per kw-hr., pounds	12.42	12.47
B.t.u. per kw-hr	15,562	15,562

Parsons Turbines. A 1500-kilowatt Parsons turbine was tested at Sheffield, England, with the following results:

Kilowatts.	Steam Pressure (Gauge).	Superheat, Deg. F.	Vacuum, Inches.	Pounds per Kilowatt-hour.
530	145.0	110	28.9	21.58
1071	131.0	124	28.3	18.24
1585	128.5	125	27.5	17.60

These last tests show well the increased steam consumption (about 50 per cent.) when running non-condensing.

Westinghouse-Parsons Reaction Type Turbines. The table below gives the results of tests of a 400-kilowatt Westinghouse-Parsons turbine.

Brake Horsepower.	Steam Pressure (Gauge).	Superheat, Deg. F.	Vacuum, Inches.	Pounds per B.H.P. Hour.*
279.4	153.1	92.5	28.0	14.34
410.7	153.2	102.9	28.0	13.45
657.3	152.7	100.3	28.0	12.48
967.5	149.6	100.2	27.6	12.79
1207.5	152.0	99.9	27.3	13.55

* Observe the steam consumption is in pounds per *brake horsepower* hour, instead of pounds per *kilowatt*-hour as for some of the other results given here.

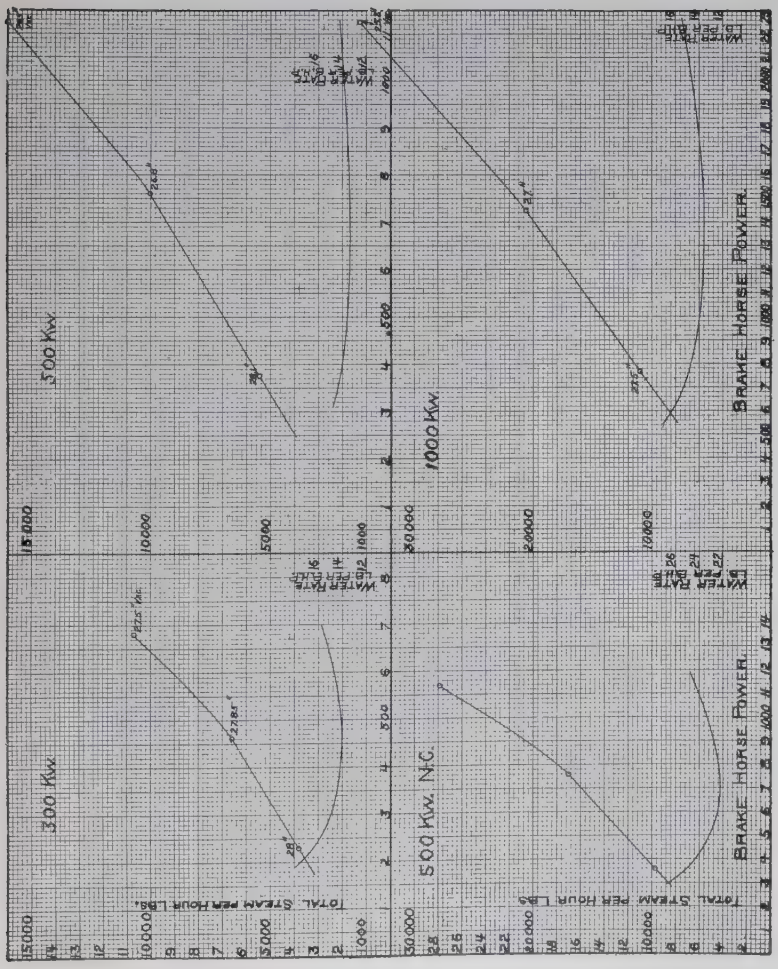

Fig. 189. Curves of Steam Consumption per Brake Horsepower-hour and Total Steam per Hour of 300, 500, and 1000 kw. Westinghouse-Parsons Steam Turbines.

300-KILOWATT TURBINE (3600 R.P.M.).

Brake Horsepower.	Steam Pressure (Gauge).	Superheat, Deg. F.	Vacuum, Inches.	Pounds per B.H.P. Hour.
232.7	145.1	4.1	28.0	15.99
460.6	144.6	4.8	28.0	13.99
688.5	140.3	7.0	27.2	15.73

The curves given in **Fig. 189** were plotted to show graphically the steam consumption of 300, 500, and 1000 kilowatt Westinghouse-Parsons turbines with varying loads.*

Rateau Turbine. A 1000-kilowatt Rateau turbine built at the Oerlikon works gave the following results of steam consumption:

Kilowatts.	Steam Pressure (Absolute).	Superheat, Deg. F.	Vacuum, Inches.	Pounds per Kilowatt-hour.
194	186	47	27.73	31.97
425	155	21	27.6	24.91
871	181	11	23.6	24.69
1024	179	10	25.05	21.98

Zoelly Turbine. A 5500-kilowatt Zoelly turbine installed at the Ouest Electricity Works, Paris, is said to operate at full load with a steam consumption of approximately 12.0 pounds per brake horsepower-hour at 160 pounds per square inch gauge pressure, 200 degrees F. superheat, and 27 inches vacuum.

De Laval Turbine. The following table gives results of tests by Dean & Main of a 300-horsepower De Laval turbine:

Brake Horsepower.	Steam Pressure (Gauge).	Superheat, Deg. F.	Vacuum, Inches.	Pounds per B.H.P. Hour.
196.0	197.7	16	27.4	15.62
298.4	197.0	64	27.4	14.35
352.0	198.5	84	27.2	13.94

Steam Consumption of Turbines. The following table of the steam consumption of modern steam turbines of various types, was prepared by Professor A. G. Christie and is based on the operating conditions as follows: steam pressure 200 pounds per square inch gage pressure, 100 degrees Fahrenheit superheat, and 28 inches vacuum, referred to 30 inches barometer:

* The numbers marked on the curves to indicate the vacuum represent the actual readings taken in the test and are not referred to a standard (30 inches) barometer.

Kilowatts.	Pounds per Kilowatt-hour.	Kilowatts.	Pounds per Kilowatt-hour.
250	18.0	4,000	14.2
500	17.0	5,000	13.8
750	16.4	7,500	13.4
1000	16.0	10,000	13.1
1250	15.8	15,000	12.8
1500	15.6	20,000	12.6
2000	15.2	25,000	12.5
2500	14.9	30,000	12.4
3000	14.6	45,000	12.3

The results shown in the above tests give the relative steam economy of the principal types of turbines from light load to overload. Tables I and II* on the following page give the comparative results of the latest reported tests in America and in Europe.

Steam Consumption of Turbines Increases With Age. The Detroit Edison Company has from time to time made numerous tests on the large turbines which are installed in their steam power plants at Delray and Connors Creek. In the following table data are given of the steam consumption at standard conditions of ten turbines, varying in rating from 7000 kilowatts to 20,000. In the eighth column of the table two values of steam consumption at the same conditions are given for each turbine. The first value for each machine is that obtained from the first recorded test after the turbine was installed and was in proper running condition. The second value in this column was obtained in a recent test of each machine after it had been operating the number of years specified in column six. In column nine is the average annual increase in steam consumption in pounds per kilowatt-hour. It will be noticed that the annual increase in steam consumption is much less in the case of the two horizontal turbines in the Connors Creek plant than for the others included in the table. The reason for this is that in the time

* Compiled by H. T. Herr and A. G. Christie.

TABLE I.

No.	Maker of Turbine.	Type.	Date of Test.	Load KW.	r.p.m.	Steam Pressure, Lbs. Abs.	Superheat.	Vacuum referred to 29.92 in. Barometer.	Pounds of Steam per KW.Hr.	Efficiency Ratio.*	Reference.
84	Westinghouse Machine Co.	Parsons	1905	5,694	750	193.2	131.50	27.41	16.20	60.7	Purchaser's Test, Penn. T.&T. Co.
253	Westinghouse Machine Co.	Parsons	1907	9,865	750	191.7	96.00	27.31	14.98	67.2	Electrical World, Jan. 29, 1908.
	General Electric Co.....	Curtis	1907	10,186	720	190.7	147.00	29.47	12.90	62.1	Electrical World, Jan. 29, 1908.

TABLE II.

No.	Maker of Turbine.	Type.	Date of Test.	Load KW.	r.p.m.	Steam Pressure, Lbs. Abs.	Superheat.	Vacuum referred to 29.92 in. Barometer.	Pounds of Steam per KW.Hr.	Efficiency Ratio.	Reference.
1	Erste Brunner.....	Curtis-Parsons	1910	2,128	1500	156.2	120.31	27 89	13.82	71.8	Periodische Mitteilungen.
2	Erste Brunner.....	Curtis-Parsons	1910	6,000	960	184.9	197.64	28.18	12.56	71.3	Zeit. d. V. D. Ing., 12/10/'10.
3	Erste Brunner.....	Curtis-Parsons	1910	7,442	960	192.0	205.51	28.18	12.625	70.3	Periodische Mitteilungen.
4	Westinghouse Machine Co.	Curtis-Parsons	1910	9,173	1800	181.7	59 07	27.81	14.57	68.9	Trans. A.S.M.E., Vol. 32.
5	Erste Brunner.....	Curtis-Parsons	1910	1,416	1260	128.2	135.69	27.60	15.18	68.8	Periodische Mitteilungen.
6	Allis-Chalmers.....	Parsons	1908	4,300	1800	186.4	107.97	27.96	14.02	68.4	Sibley Jour. of Eng., 1/11.
7	Richardson & Westgarth..	Parsons	1910	6,257	1200	203.7	176.00	29.10	11.90	68.4	Electrician, Vol. 66, p. 862, 1911.
8	General Electric Co.....	Curtis	1912	12,460	720	207.5	191.00	27.52	13 63	68.2	Jour. A.S.M.E., Aug. '12, p. 1169.
9	Brown-Boveri & Cie.....	Curtis-Parsons	1911	3,053	1360	150.2	146.40	29.00	13.01	68.0	Dinglers P. J., 6/17/'11.
10	Brown-Boveri & Cie.....	Curtis-Parsons	1911	1,750	1500	176.4	214.50	27.08	14.23	67.5	Zeit. f. d. G. Turb., 5/30/'11.

* Efficiency ratio is the steam consumption compared with that of the ideal Rankine cycle. (See pages 28 and 93. Also Moyer's *Power Plant Testing*, pages 304–322.)

between the initial and final tests of these two turbines the blading had been reconstructed so that a comparison on the same basis with the vertical turbines at the Delray station is not possible. The second of the Connors Creek turbines was operated in the recent test at a higher load than the initial. The results in the last column in the table are probably the most interesting as indicating that on the average there is an annual increase of steam consumption on the basis of the guaranteed conditions of about one per cent. per year for large steam turbines.

Location of Plant.	Type.	Steam Pressure Gauge, lbs. per sq. in.	Superheat, deg. F.	Time Yr.	Test Load Kilowatt.	Steam Rate Standard Conditions	Aver. Annual Incr., lbs. per kw. hr.	Guaranteed Conditions, lbs. per hr.	Average Annual Incr. in % of Guarantee.
Connors Creek	Hor.	220	200	7.8	20,000	11.05 11.16	0.01	11.04	0.13
Connors Creek	"	220	200	9.8	15,000 20,000	10.82 11.14	0.03	11.45	0.29
Delray	Vert.	210	170	5.9	7,000	13.32 14.26	0.16	14.0	1.14
Delray	"	210	170	6.0	7,000	13.26 13.89	0.11	14.0	0.79
Delray	"	210	170	9.1	7,000	14.30 15.53	0.14	14.0	1.00
Delray	"	210	170	6.0	7,000	13.70 14.41	0.12	14.0	0.86
Delray	"	210	170	9.6	10,000	14.59 15.86	0.13	15.6	0.83
Delray	"	210	170	6.3	10,000	14.50 14.96	0.07	15.6	0.45
Delray	"	210	170	6.8	10,000	14.94 15.45	0.08	14.5	0.55
Delray	"	210	170	6.8	15,000	13.44 15.04	0.24	13.55	1.77

HEAT UNIT BASIS OF EFFICIENCY.

The usual methods used for correcting steam turbine tests to get a standard for comparison explained in Chapter VI are not established on a highly scientific basis. Engineers appreciate generally that a more rational method of comparison of the

economy of heat engines on a heat unit basis should be adopted in cases where it is practicable. As regards steam turbines there are, however, so many uncertain factors entering into the determination of a **thermodynamic** efficiency from the available energy that for the present such methods can be of little value, except in some special cases. Comparatively high superheats are now generally used, and our knowledge of the effect of reheating in a multi-stage turbine is very indefinite.

A **thermal efficiency** can, however, be calculated readily and more satisfactorily by determining what percentage the heat equivalent of the work is of the heat "used by the turbine," assumed to be the difference between the total heat in the steam at the initial conditions and the heat ("of the liquid") in the condensed steam at the temperature of the exhaust.

By this method the full load test of a Westinghouse-Parsons turbine reported by F. P. Sheldon & Co. will be calculated from the data given in an official report.

THERMAL EFFICIENCY OF A 400-KILOWATT STEAM TURBINE.

Brake horsepower	660
Corresponding indicated or "internal" horsepower of a reciprocating engine $= \frac{660}{.933}$	708
Total steam used per hour, pounds	9169
Steam used per "internal" horsepower per hour, pounds	12.96
Steam pressure, pounds per square inch **absolute**	166.9
Superheat, degrees F.	2.9
Vacuum, referred to 30 inches barometer, inches	28.04
Temperature of condensed steam, degrees F. (at .96 pound per square inch absolute pressure)	100.6
Total heat contents of one pound of dry saturated steam at the initial pressure, B.T.U.	1193.9
Heat equivalent of superheat in one pound of steam, B.T.U. (*Cp.* from Fig. 12)	1.9
Total heat contents of one pound of superheated steam, B.T.U.	1195.8
Heat of liquid in condensed steam, B.T.U.	68.6
Heat used in turbine per pound steam, B.T.U.	1127.2
Heat used in turbine per "internal" horsepower per minute, B.T.U. $= 1127.2 \times \frac{12.96}{60} =$	**243.5**
Heat equivalent of one horsepower per minute, B.T.U. $= \frac{33{,}000}{778}$	42.42
Thermal efficiency, per cent. (42.42 ÷ 243.5)	**17.4**

In order to make the results of such calculations of steam turbine tests comparable with the usual heat unit computations of reciprocating steam engine tests the results are generally expressed in terms of indicated or **"internal" horsepower.** F. P. Sheldon & Co. assumed the mechanical efficiency of a reciprocating engine of about the same capacity at full load to be 93.3 per cent.

Standard forms for data sheets and for tabulating results of steam turbine tests are given in *Power Plant Testing* by the author. (See pages 354–386 (Third Edition).) Full explanations of methods and of necessary precautions are given.

CHAPTER XIV.

STEAM TURBINE ECONOMICS.

The Best Conditions of Vacuum, Superheat, and Steam Pressure. For normal operating conditions, a great deal can be learned about the most profitable and satisfactory vacuum, superheat, and initial steam pressure for steam turbines from a comparison and study of existing modern power plants.

DEVELOPMENT OF POWER PLANT UNITS

Year	Boiler Pressure, Pounds per Square Inch (Gage)	Heating Surface, Square Feet	Kilowatts per Unit.	Steam, Pounds per Kilowatt-Hour
1879	80	60	.....	.....
1881	100	.....	16	140
1891	150	1,800	.....	.....
1893	150	.....	100	31
1896	150	3,600	250	.....
1898	150	.....	750	22.8
1901	160	8,100	1,600	18.4
1903	175	21,700	4,000	18.0
1906	175	.....	6,000	17.7
1907	200	.....	5,000	13.7
1909	200	23,500	15,000	13.5
1915	200	.....	20,000	11.3
1916	...	.....	.....	.....
1918	225	.....	45,000	10.8
1920	240	26,500	60,000	10.0
1921	350	29,800	.....	.....
1923	350	30,600	.....	.....
1924	400	.....	70,000	.....

The rate at which boiler design and turbine output has progressed is almost phenomenal, and the problems which face engineers today in the light of modern advancement and development embrace designs for steam boilers of 400 pounds per square inch working pressure and 30,000 square feet of heating surface,

operating with turbines of 50,000-kilowatt capacity. This is present-day power plant engineering grown up from the small beginning of little more than 40 years ago as summarized in the preceding table:*

Relative Cost of Turbines and Reciprocating Engines. It may be stated as a general rule that the large sizes of steam turbines, and this is especially true of combination units consisting of steam turbines and generators, that they are much cheaper than correspondence sizes of reciprocating engines or reciprocating engines and their generators. Small steam turbines sometimes cost more than cheap steam engines, while steam turbines including reduction gears cost practically the same as good steam engines, when both are equally suitable for the service.

The amount of steam used by large steam turbines is much less than that required for reciprocating steam engines of the same capacity. It has often been stated that engines of the highest grade, and therefore of expensive design, with a capacity of 100 to 1000 kilowatts have equal and sometimes lower steam consumption than the corresponding size of steam turbines.

Data acquired from cost records of power stations on sites near adequate supplies of condensing water, show that the cost of erecting public utility power plants, with capacities from 20,000 to 60,000 kilowatts, is about $100 per *kilowatt* of installed capacity, when no spare turbine generator capacity is provided. The cost of the boiler room, designed to burn bituminous coal, including buildings, is about $300 per *boiler horsepower* installed, though this cost may vary widely because of differences in operating conditions and in the quality of the apparatus installed. An extension to an industrial boiler plant costs approximately $150 a boiler horsepower, when the refinements in design and the high grade equipment used in public utility stations are not required. Modern large industrial power plants having load conditions similar to public utilities usually find the same advantages in high operating efficiencies from the use of moderately high steam pressures and equipment designed for high efficiencies. For such plants the boiler room equipment would

* In large part from *Power Plant Engineering*, June 1, 1924.

cost about the same as for a public utility station so that, allowing a cheaper building, the cost of the boiler plant would be close to $250 a boiler horsepower. By using a more cheaply constructed building than the public utility station finds desirable, the cost of an industrial plant may be brought down to $100 per *kilowatt* installed and, if low investment charges are essential, this cost in some cases may be brought below $80. These are averages of costs based on an average building material commodity price index of 170, considering 1913 prices as 100.

Maximum Size of Steam Turbines and Steam Engines. Manufacturers of steam turbines have not considered it wise to put into production a larger size of steam turbine than about 70,000 kilowatts. As a comparison it may be interesting to note that the largest reciprocating steam engine is probably in a rolling mill at Lukens Iron Works, Pennsylvania, which is rated at 25,000 horsepower (equivalent to 16,500 kilowatts). The largest reciprocating steam engine direct-connected to an electric generator is rated at about 5000 kilowatts.

The Question of the Most Profitable Vacuum. Steam turbine manufacturers are inclined, naturally, because of the obvious advantages of turbines over reciprocating engines for operation at high vacuums, to draw attention to the reduction in the steam consumption when a plant is operated at a high vacuum. Then the question is often raised as to the actual economy considering the increased first cost of the condensers, pumps, and piping, together with probably larger operating expenses. A great deal depends on the local conditions, particularly on the average temperature of the condenser cooling water. At places only slightly elevated above the sea-level and where the temperature of the water supply for the condensers is very low — near the freezing point for a large part of the year — it is doubtless profitable to install condensing apparatus of sufficient size to operate steam turbines at from 28.5 to 29 inches vacuum. The following table, calculated by J. R. Bibbins, gives side by side the theoretical and the practical vacuums at sea-level for varying temperatures of the cooling water.

VACUUM AT SEA LEVEL FOR VARYING TEMPERATURES OF COOLING WATER.

Temperatures of Cooling Water. Deg. F.	Theoretical Possible Vacuum. Inches.	Perfect Condenser, No Temperature Difference. Inches.	Actual Condenser, 15° F. Difference. Inches.	Actual Condenser, 15° F. Difference. Inches.
Ratio Water to Steam.....	Infinite.	60 to 1.	60 to 1.	100 to 1.
32	29.83	29.67	29.43	29.54
60	29.50	29.12	28.56	28.82
70	29.30	28.77	27.72	28.38
75	29.10	28.51	27.37	28.11

In modern surface condenser installations there is usually a difference of about 15 degrees F.* between the temperature of the condensed steam and of the discharged water. It will be seen then in the above table that with the reasonable ratio of cooling water to steam of 60 to 1 the maximum vacuum obtainable, when the cooling water is taken in at 60 degrees, is 28.6 inches, and when taken in at 70 degrees is only 27.7 inches.†

The fact must not be lost sight of that the elevation has an appreciable effect on the maximum possible vacuum and consequently on the most profitable vacuum. At an elevation of 1000 feet above the sea-level the possible vacuum obtainable with a given condensing apparatus will be about an inch less than at tide-water, and the vacuum reduction is, of course, in proportion for other elevations.

Bibbins has also calculated the actual percentage saving when the condenser equipment is increased so that the plant can be operated at 28 inches instead of 26 inches. It is estimated that the cost of the condenser equipment including pumps and piping will be $4000 more for a 2000-kilowatt plant to operate at 28 inches vacuum than at 26 inches vacuum. The results are given in the table on the following page:

* This is a conservative value. In good modern practice a considerably smaller temperature difference is obtainable.

† A firm of engineers, which has been installing steam turbines almost exclusively in the power plants it has designed and constructed, has equipped a power plant at Tampa, Florida, with Diesel oil engines because of the cost of cooling water in a warm climate.

RELATIVE ECONOMY OF 28 INCHES VACUUM OVER 26 INCHES IN A 2000-KILOWATT PLANT.

Estimated Increased Cost of Equipment is $4,000.

Net Saving expressed as Percentage of Increased Capital Cost to Secure 28 Ins. Vacuum over that for 26 Ins.	Average Load in Kilowatts.	Hours of Service per Day.	Actual Evaporation, Pounds.	Steam Consumption, Average Pounds per Kilowatt-hour.	Water Saved per Kilowatt-hour by Raising Vacuum from 26 Ins. to 28 Ins.	Coal, Dollars per Ton.
118	1500	24	9.5	23	1.84	4.50
27	1000	24	8	22	1.76	2.25
4	1000	10	8	22	1.76	1.13

In the calculations for the above results the rate of interest was taken at 5 per cent. and depreciation at 7.5 per cent. on the extra cost of equipment. Cost of extra power consumed was at the rate of 1 cent per kilowatt-hour, and 10 cents per 1000 gallons of feed-water saved.

Although it may be stated, in general, that it is profitable to equip a station to operate under **normal conditions** at a vacuum of 28 inches instead of 26 inches, it will be observed from the above table that there are cases where there is practically no advantage either way. In the third case given, where the plant has only a 10-hour load and coal is very cheap, the gain is only 4 per cent.

Operation at 29 inches vacuum compared with 28 inches is not nearly so favorable to the higher vacuum as the comparison of 28 inches with 26 inches.

It will be observed in the table on the following page that the volume of the steam is increased practically in the same **ratio** (the volume is practically doubled) when the vacuum is increased from 28 inches to 29 inches as when increased from 26 inches to 28 inches. Fig. 181 shows graphically the very large increase in volume of the steam in its passage through the five stages of a large Curtis turbine operating at 29 inches vacuum.

TABLE OF THE VOLUME OF A POUND (SPECIFIC VOLUME) OF DRY SATURATED STEAM AT HIGH VACUUMS.

Vacuum, Inches.	Volume, Cubic Feet.
29	665*
28	342
26	176

* Ratio of the volume at 28 inches vacuum to that at 26 inches is 1.94, and the ratio of volumes at 29 inches vacuum and at 28 inches is 1.95.

It may be stated then that the capacity of the condensing equipment for a turbine operating at 29 inches vacuum must be practically four times as large as it would be for one exhausting at about 26 inches vacuum. Or, in other words, the volume of a pound of steam at the exhaust is 166 cubic feet larger at 28 inches vacuum than at 26 inches, but that at 29 inches it is 323 cubic feet larger than at 28 inches. Now if as has been stated the cost of the condensing equipment is $4000 more for a 2000-kilowatt unit when 28 inches vacuum is substituted for 26 inches, the **increased cost is obviously much greater when 29 inches vacuum is compared with 28 inches.**

For turbines of which the **steam consumption** is not reduced very much more per inch of vacuum between 28 and 29 inches than between 26 and 28 inches, in a comparison of the economic operation at 29 inches vacuum with 28 inches there is a large increased capital cost for condensing equipment which is not offset by a proportionate reduction of the steam consumption, and **there are probably comparatively few places — unusually located as regards low elevation, low temperatures, large capacity, expensive fuel, or high load factor — where an installation for operation at an average vacuum of 29 inches is profitable.**

The **percentage** change in the steam consumption is approximately the same at light ("fractional") loads as at full load (see page 190). Now because the steam consumption per kilowatt-hour is greater at light loads, the **change in steam consumption per kilowatt-hour** is therefore also greater at light loads than at

full load. Ordinarily this fact is stated by saying that a change in vacuum has a greater "effect" at light than at full load, and that the effect is more marked at high than at low vacuums. The effect of vacuum on the steam consumption of any impulse

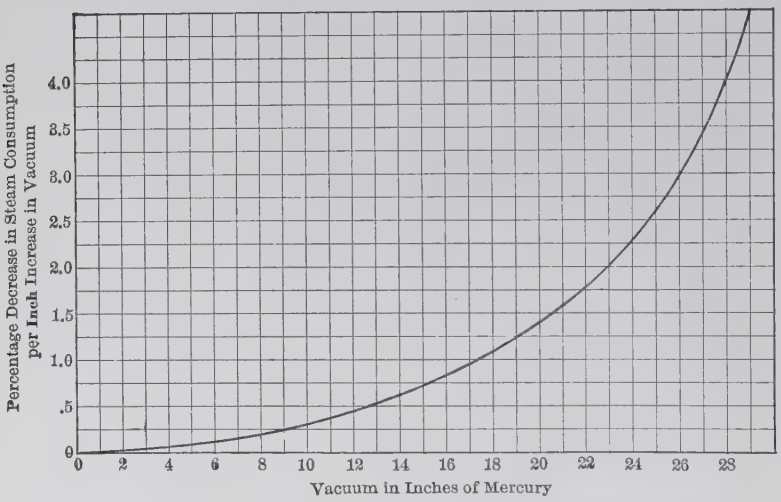

FIG. 190. Percentage Curve of the Effect of Vacuum on the Steam Consumption of a Single-Stage Impulse Turbine.

turbines of the **single-stage type** is probably shown very accurately by **Fig. 190** (reproduced from Fig. 88).*

* In the catalogs of the General Electric Company it is stated that a curve like Fig. 127 is typical for most Curtis turbines. Actually, however, a curve like Fig. 78 is more accurate. Emmett has stated recently in a published communication that "around 27 inches the change in economy per inch is 6.6 per cent.; 28 inches 7.8 per cent.; and 29 inches 9.5 per cent."

Parsons states in a paper read before the Institution of Electrical Engineers in 1904 that in a turbine "the benefit derived from a good vacuum is much more than in a reciprocating engine. Every inch of vacuum between 23 and 28 inches affects the steam consumption on an average about 3 per cent. in a 100-kilowatt; 4 per cent. in a 500-kilowatt; and 5 per cent. in a 1500-kilowatt turbine, the effect being more at high vacuum and less at low." It seems very doubtful to the author whether, in general, vacuum corrections can be classified according to the size of the turbine. There are some very large turbines of the Parsons type of which the vacuum correction is less than 4 per cent. per inch of vacuum.

The variation of the steam consumption of a 500-kilowatt Westinghouse-Parsons turbine for vacuums from 25 to 29 inches

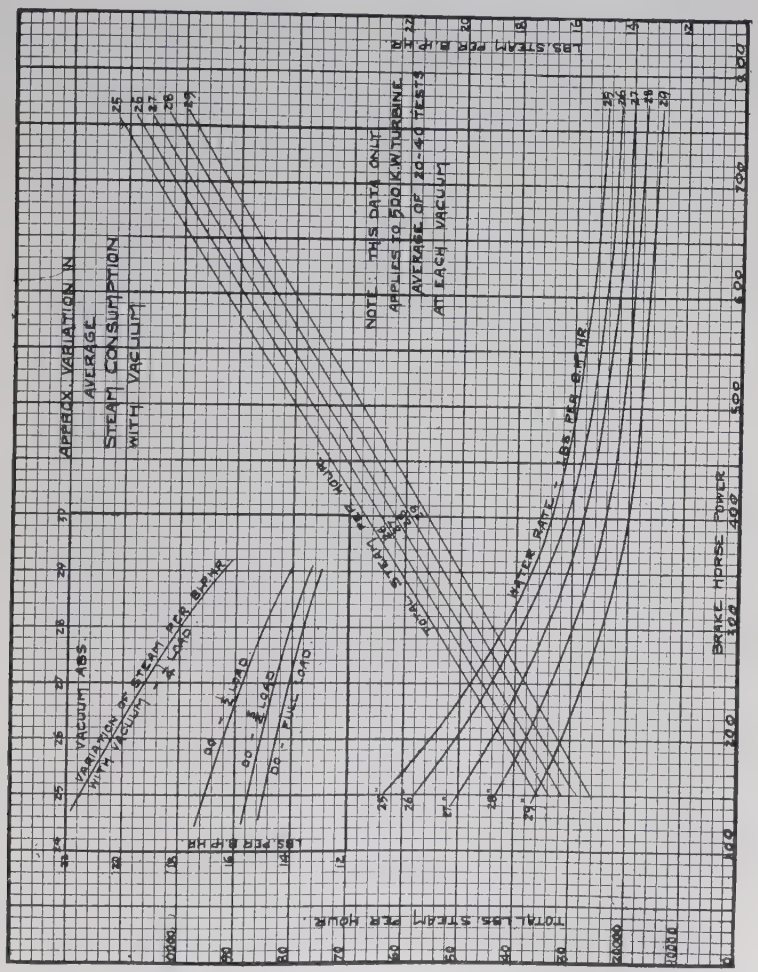
APPROX. VARIATION IN AVERAGE STEAM CONSUMPTION WITH VACUUM
NOTE: THIS DATA ONLY APPLIES TO 500 K.W. TURBINE AVERAGE OF 20-40 TESTS AT EACH VACUUM
LBS. STEAM PER B.H.P. HR.
VACUUM ABS.
VARIATION OF STEAM PER B.H.P. WITH VACUUM
LBS. PER B.H.P. HR.
STEAM PER KW HOUR
WATER RATE - LBS PER B.H.P. HR.
BRAKE HORSE POWER
TOTAL LBS STEAM PER HOUR

FIG. 191. Curves of Steam Consumption of a 500-Kilowatt Westinghouse-Parsons Turbine for 25, 26, 27, 28, and 29 Inches Vacuum.

from light loads to overloads is illustrated by the curves in Fig. 191. What might be called a curve of normal vacuum correction

factors for comparing those of 26, 27 and 29 inches with 28 inches in Westinghouse turbines is given in **Fig. 192.**

Chilton,* after stating that the impression is no longer so common that a high vacuum is necessary to secure good results with steam turbines, says that the difference in economy of Allis-Chalmers-Parsons turbines between 24 and 27 inches vacuum is 5 per cent. per inch. Between 27 and 28 inches the saving is 6 per cent., and between 28 and 29 inches is 7 per cent.

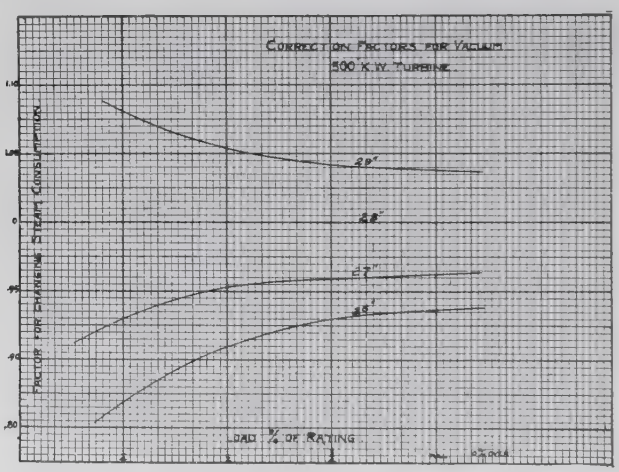

Fig. 192. Vacuum Correction Factors for Westinghouse Single-Flow Turbines.

An idea of the relative quantity of condensing water required for different vacuums may be gained by comparing that required for the usual operating vacuums. For example, with injection water of 70 degrees F., the usual temperature upon which condenser guarantees are based, it is customary to estimate that to obtain a vacuum of 27 inches about 36 pounds of water will be used for each pound of steam condensed, and about 1.4 times this quantity is required for a vacuum of 28 inches. With injection water at 60 degrees F., which may be considered the winter temperature, the quantities required for the foregoing vacuums are

* *Street Railway Journal*, Oct. 19, 1907.

approximately 28 and 34 pounds respectively. Having the quantity of condensing water required, the cost of fuel, and cost of water delivered to the condenser, the vacuum best suited to the conditions under consideration may be readily determined. Theoretically, the effect upon the turbine of reducing the vacuum below that for which it is designed, is to reduce the capacity and to lower the rating at which maximum economy is obtained.

The following table * illustrates the percentage gain in economy per inch of vacuum for various vacuums. The close agreement between the actual results and the theoretical values should be observed. The table applies, however, only to turbines using very high steam pressures and superheats. For " land " turbine practice it is serviceable only for comparison.

Inches of Vacuum.	Gain in Per Cent.			
	28	27	26	25
Curtis	5.1	4.8	4.6	4.2
Parsons	5.0	4.0	3.5	3.0
Westinghouse-Parsons	3.14	3.05	2.95	2.87
Theoretical	**5.2**	**4.4**	**3.7**	**3.0**

Effect of Superheating on Economy. The effect of superheat on the economy of De Laval and Parsons turbines is usually stated to be 10 per cent. per 100 degrees F. superheat. This statement is probably very nearly correct for the usual ranges of superheat in practice and is the usual correction employed by most consulting engineers for correcting steam turbine tests † up to about 150 degrees F. superheat.

Some investigations made by Professor Hobart show that the mean superheat correction for Parsons turbines is almost exactly

* *Mechanical Engineer*, vol. XIX, No. 8.

† The superheat corrections used by the engineers of the Westinghouse Companies, by Dean & Main, and by Parsons, are all approximately 10 per cent. per 100 degrees F. superheat.

10 per cent. **per 100 degrees superheat** for all superheats from 0 to 100 degrees F. Between 100 and 150 degrees superheat it is approximately 8 per cent., and between 150 and 250 degrees is about 6 per cent. It is the opinion of the author that the results of this investigation can be considered quite accurate, as a large number of tests were compared. A curve showing approximately the same sort of variation in the superheat correction of De Laval turbines is given in Fig. 87. Chilton states that tests of Allis-Chalmers-Parsons turbines show that the "increment of saving becomes smaller as the superheat is increased"; adding that for 50 degrees F. superheat the steam consumption is reduced 7 per cent. (at the rate of 14 per cent. per 100 degrees); for 100 degrees 10 per cent; and for 150 degrees 12.5 per cent. (at the rate of a little more than 8 per cent. per 100 degrees).

According to Kruesi of the General Electric Company 100 degrees F. superheat reduces the steam consumption of Curtis turbines 8 per cent., but "the first 50 degrees of superheat is of greater value than the second 50 degrees."*

When steam at about 150 pounds per square inch gauge pressure is superheated 100 degrees F. the total heat of the steam is increased about 4.8 per cent. with an additional **fuel expenditure** of approximately 6 per cent. if the boiler equipment is good. Now since the steam consumption is reduced from 8 to 10 per cent. for 100 degrees F. superheat there is obviously a saving of from 2 to 4 per cent. in the cost of fuel.

Experience seems to show that the best economic results will be obtained with from 100 to 150 degrees F. superheat for turbines of the Parsons type, and about 50 degrees superheat for Curtis turbines of more than one stage. In all kinds of turbines of the single-stage impulse type there is probably always a saving

* Because curves of steam consumption per kilowatt-hour for varying superheats (like Fig. 126) were apparently straight lines, most turbine engineers, until very recently, believed that at high superheats the percentage correction was increased instead of being reduced as more recent results show. Since it has been fairly well established that the specific heat of superheated steam has very low and minimum values at from about 200 to 250 degrees F. superheat, the later results seem to be the more reasonable.

of from 4 to 5 per cent. in fuel cost per 100 degrees F. superheat within the practicable limits of superheating.

Although there is much yet to be determined concerning superheated steam, it has been shown by experience in turbine plants that a considerable saving in fuel can be secured by superheating the steam at least a moderate amount. The greater saving in turbines of the Parsons type over multi-stage Curtis turbines is due to the larger "skin-friction" or disk and blade rotation losses of the large number of rows of blades in Parsons turbines. The curves in Fig. 69 show the very large percentage that these losses are reduced when the blades revolve in dry steam instead of wet steam. When the admission steam to a Parsons turbine is dry saturated the steam in the low-pressure stages will probably have nearly 20 per cent. of moisture, while if it is superheated 150 to 200 degrees F. the steam in these stages will be nearly dry.

Finally, the use of a high degree of superheat must depend not only on the type of turbine, the load factor, and the size of the units but also upon the nature of the service as regards severe and frequent variations in the load, having in mind the difficulties which have been encountered in the practical operation of superheaters, steam piping, valves, pumps, and auxiliary machinery.

Reasons for the Improved Economy in Turbines and Reciprocating Engines Due to Superheated Steam. A gain in steam and fuel economy results from the use of superheated steam in either turbines or reciprocating engines. In the turbine the gain comes principally from the reduced fluid friction of the steam moving at a high velocity through passages and blades, some of which have also a comparatively high velocity. In a reciprocating engine the gain from superheated steam is due to the reduction of cylinder condensation, resulting in less loss due to the cooling of the cylinder from the reëvaporation of moisture at the lower pressures near the end of the stroke. On account of this cooling of the cylinder ends, the loss due to the "initial condensation" of the steam admitted on the return stroke is often 40 to 50 per cent. of the weight of steam admitted. This loss is partly or

entirely prevented when the steam is superheated, depending upon the degree of superheat. In a steam turbine there is a similar loss due to condensation, but it is **due almost entirely to the mere expansion of the steam.** The walls of the turbine casing remain, however, at a practically uniform temperature, so that there is no opportunity for loss through reëvaporation of condensed steam.

Steam Pressure Best Suited to Turbines. Probably the most suitable operating pressure for most power plants is about 150 pounds per square inch gauge pressure (165 absolute) at the throttle valve, and at least in plants of moderate size, a greater saving can be obtained by the use of a moderate amount of superheat than by increasing the pressure beyond this point. In large plants steam pressures of from 250 to 350 pounds per square inch are not now unusual.

Chilton states that there is a gain of 2 per cent. in steam consumption from increasing the steam pressure from 150 to 250 pounds per square inch.* Against the saving in steam consumption must be charged the increased cost of piping, valves, and boilers, and also the loss due to increased leakage and steam friction on the blades. Increasing the steam pressure will also increase considerably the cost of the turbine. A "rough and ready" correction used a great deal by turbine engineers is one-tenth per cent. reduction of the coal bill for each pound per square inch increase in steam pressure.

Speed Variation as it Affects Economy. A steam turbine will give its best economy at some particular speed, just as it has been found to give its best economy at some definite load. For this reason the design of a turbine should be worked out very carefully with velocity diagrams to determine whether at the speed required by the operating conditions it will give the best economy. Whenever any changes are made in the design of a turbine, the manufacturers will always make tests to determine the steam con-

* The engineers of the Westinghouse and General Electric companies use practically the same correction for initial pressure. It may be added that the **correction for exhaust pressure** (back pressure) of non-condensing turbines is about ten times as large as the correction for initial pressure.

sumption at various speeds, and curves like those shown in Fig. 80 are calculated and plotted. If it is found that the turbine has a lower steam consumption at a slightly different speed from that for which it is rated, either the angles of the blades or the pressures should be changed. The reasons for such changes are obvious, since the blade speed has a very definite relation to velocity of the steam in the blades. If the designer is not successful in securing this relation for the rated speed, there will be impact of the steam against the blades and a consequent loss of efficiency.

The curve of steam consumption in Fig. 80 shows the change in economy at various speeds. At 2000 revolutions per minute the steam consumption is 19.6 pounds per kilowatt-hour; at 1800 revolutions (rated speed) it is 19.45 pounds; at 1600 revolutions, about 19.8 pounds; at 1400 revolutions, about 20.7 pounds; and at 1000 revolutions, about 24.7 pounds. It will be observed in these curves that the ideal conditions have been secured in the design of this turbine; that is, the steam consumption is lowest and the output (load) greatest at the rated speed. Within a range of about 50 revolutions above or below the rating (a total variation of about 6 per cent.) the steam consumption is practically constant. These curves are typical for all good designs of steam turbines.

When a **speed test** is made of an impulse turbine the best results are obtained as regards the accuracy of the design by running the turbine with a number of nozzles wide open to give approximately full load at the designated speed. The test for each speed can then be made of comparatively short duration, as the steam can be weighed **continuously** between the first and last tests without interruption when the speed is being changed and the corresponding load or output measured. With a constant number of nozzles discharging steam the rate of flow will be the same at all speeds.

Comparative Economy of Steam Turbines and Reciprocating Engines. To summarize the results of tests on a number of large steam turbines and reciprocating engines the following tables have been prepared. Steam consumption of most of the turbine tests was given in the published data in terms of kilowatt-

hours or electrical horsepower-hours. In order to make comparisons with the reciprocating engine it was necessary to reduce all to a **common standard — brake horsepower-hour.** To express all the results in this common standard various efficiencies must be assumed. In the calculations the **generator efficiencies** given on page 527 were used to obtain the following coefficients to change the steam consumptions from the rate per kilowatt-hour to that per brake horsepower-hour:

Rating of Turbine, Kilowatts.	Coefficient.
300 and 400	.68
500	.71
1,000 to 3,000	.72
5,000 to 10,000	.73

Mechanical efficiency of reciprocating engines of 3000 to 5000 horsepower is about 91 per cent.; 1000 horsepower, about 90 per cent.; and 400 to 700 horsepower, about 89 per cent.

In the following tables are given the steam consumptions of a large number of steam turbines and some particularly good reciprocating engines. A great many of the steam turbine tests given are approximately the full load data taken from the tests recorded at the end of the preceding chapter, and some others are taken from Chapter VI.

The ratings given in the tables are those for what is generally known by engineers as "full load;" meaning that the turbine can carry economically a load at least 50 per cent. larger than this rating. This statement is necessary because some manufacturers use a rating based on **maximum output.**

Assuming average values of the corrections given above by various authorities, an **approximate equivalent** steam consumption has been calculated for each engine at 0 degrees F. superheat, 28 inches vacuum, and 165 pounds per square inch absolute steam pressure.

STEAM CONSUMPTION OF TURBINES.

A = American, E = English, F = French, G = German, S = Swiss, and W-P = Westinghouse-Parsons.

Turbine.	Rated Power.	Conditions of Test.				Steam per Hour as per Test.		Equivalent Steam per b.hp.-hr. at 0 Degs. Sup., 28 ins. Vac., 165 Lbs. Abs. Press.*
		Superheat, Deg. F.	† Vacuum Inches.	Steam Pressure Lbs. Abs.	r.p.m.	Pounds per kw.	Pounds per b.hp.	
	hp.							
De Laval (G)....	30	0	non-con.	100	.....	.....	39.6	
De Laval (G)....	150	0	26.4	114	.....	.....	17.70	15.81
De Laval (A)....	300	0	26.6	206	.....	.....	15.17	15.03
	kw.							
Parsons (E).....	300	0	26.6	158	3000	23.15	15.70	14.71
W-P (A).....	300	5	28.0	160	3600	.....	13.99	13.99
W-P (A).....	300	100	28.0	168	3600	.....	12.48	13.77
	hp.							
Zoelly (G).....	500	107	28.7	201	.....	18.82	13.37	15.84
	kw.							
W-P (A).....	500	1	27.8	164	3600	.....	13.28	13.17
Curtis (A).....	500	290	28.0	165	1800	15.10	10.71	13.20
Curtis (E).....	500	104	26.9	168	1800	20.5	14.55	14.68
Rateau (F).....	500	0	26.7	136	2400	21.2	15.05	13.25
W-P (A).....	1000	0	27.0	163	1800	.....	13.61	13.04
Rateau (S).....	1000	10	25.0	179	.....	21.98	15.80	12.83
Parsons (S).....	1200	468	28.8	178	.....	15.30	11.00	15.52
Parsons (E).....	1500	125	27.5	144	.....	17.60	12.67	13.48
Curtis (A).....	2000	207	28.5	181	900	15.02	10.82	13.47
Parsons (G).....	3000	235	27.0	139	1350	14.74	10.60	12.00
Curtis (A).....	5000	142	28.8	189	750	13.52	9.87	11.95
W-P (A).....	7500	96	27.3	193	750	15.15	11.03	11.95
Curtis (A).....	9000	116	29.6	194	750	13.00	9.50	12.00

Additional data from recent tests of steam turbines are given in tables I and II, page 363.

Combined Steam Engine and Low-pressure Steam Turbine. The combination units of a large Allis engine with Curtis exhaust steam turbines (see Fig. 181c, page 345), as installed in the 59th Street Power Station of the Interborough-Metropolitan System in New York, have a rated capacity of 15,000 horsepower

* Correction curves in Figs. 91a and 91b were used to correct the De Laval tests for superheat and vacuum and the usual correction of .1 per cent. improvement in economy per pound increase of pressure.

For Parsons and Westinghouse-Parsons turbines the following corrections were used:

Superheat (300–1000 kw.) 10 per cent.; (1200–7500 kw.) 8 per cent. per 100 degrees F.

Vacuum (300–1000 kw.) 4 per cent.; (1200–7500 kw.) 3 per cent. per inch.

Pressure .1 per cent. per pound.

and the following for Curtis, Rateau, and Zoelly turbines:

Superheat, 8 per cent. per 100 degrees F.

Vacuum (26–28 ins.) 7 per cent.; (28–29.5 ins.) 8 per cent. per inch.

Pressure .1 per cent. per pound.

† Referred to 30 inches barometer.

and give a steam consumption of 13.19 pounds per kilowatt-hour (about 8.74 pounds per i.h.p.-hour) with steam supplied to the engine initially dry saturated (no superheat), 194 pounds per square inch absolute pressure and exhausting from the turbine at 28.8 inches vacuum, referred to 30 inches barometer.

STEAM CONSUMPTION OF RECIPROCATING ENGINES SHOWING EXCEPTIONALLY HIGH ECONOMY.

Engine.	Horsepower (ind.).	Superheat, Degrees F.	Vacuum, Inches.	Steam Press., Lbs. Abs.	r.p.m.	Steam per Hour.		Equiv. Steam Consumption per b.h.p. at 0 Deg. superheat, 28 Ins. Vac. and 165 Lbs. Abs. Pressure.	References.
						i.h.p.	b.h.p.		
Rockwood-Wheelock ..	595	0	25.4	174	76.4	13.00	14.61	14.62	F. W. Dean, Trans. A.S.M.E., 1895.
McIntosh & Seymour.	1076	20	27.1	138	99.6	12.76	14.19	13.89	F. W. Dean, Trans. A.S.M.E., 1898.
Leavitt Pumping Engine.	576	0	27.3	191	51.6	11.20	12.59	13.03	E. F. Miller, Technology Quarterly, Vol. IX.
Rice & Sargent (Phila.).	420	297	25.8	157	102	9.56	10.75	13.39	D. S. Jacobus, Trans. A.S.M.E., 1904.
Westinghouse (vertical).	5400	0	27.3	200	76	11.93	13.12	13.76	Eng. Record, May 28, 1904.
Kerchove.....	3600	308	27.6	146.5	86	11.78	12.95	13.58	Von der Kerchove.
McIntosh & Seymour (Boston).	2000	92	25.5	171	100	11.05	.....	.....	.....
Allis-Chalmers (New York).	7500	0	25.1	190	80	11.96	.....	.....	.....
Moabit (Berlin).....	2500	223	28.1	203	85	8.96	.....	11.45‡	.....
Erie-Lentz (simple engine).	282	141	0	156	208	15.24‡	.....	.....	J. A. Moyer in *Power*, 1912.
Buckeye (compound engine).	142	256	27.2	196	195	9.65	10.82‡	.....	*Power*, 1912.

Effect of Superheat, Vacuum, and Admission Pressure on the Economy of Reciprocating Engines. According to Professor Schroeter* the steam consumption of reciprocating steam engines is reduced about 6 per cent. for 50 degrees F. and about 9 per cent. for 100 degrees F. of superheat. Parsons† has shown that in a triple-expansion engine the steam consumption can be reduced only .4 per cent. per inch with an increase of

* Storm Bull., *Journal of Western Society of Engineers*, December, 1903.

† *Proc. Inst. of Naval Architects*, April, 1908; *Mechanical Engineer*, May 1, 1908, and *Die Turbine*, July, 1905.

‡ Probably World's records for steam engines.

vacuum between the limits of 25 and 28 inches, and at a still higher vacuum there is practically no gain at all. Increased **initial steam pressure** reduces the steam consumption of reciprocating engines .1 to .2 per cent. per pound per square inch.

A comparison of the two tables shows that in large capacities steam turbines will give, for the same standard conditions, better economy than reciprocating engines.* It is shown that for sizes from 3000 to 9000 kilowatts the steam consumption of turbines is about 12 pounds per brake horsepower-hour at the assumed standard conditions of 0 degrees superheat, 28 inches vacuum, and 165 pounds per square inch absolute pressure; and that, operating at the same conditions, the steam consumption of the best designs of reciprocating engines is about 13 pounds.

Economy of Small Reciprocating Engines and Turbines. Nearly all small high-speed reciprocating engines rapidly deteriorate in economy, primarily because the valve leakage becomes excessive. Although an engine of this kind will meet the guarantees of steam consumption in a shop test, it has been shown that very soon they require a much larger amount of steam.† Tests of seven high-speed engines of various types rated at 100 to 200 horsepower conducted by Dean and Wood in 1907 show that the steam consumption of such engines after a comparatively short duration of service was found to vary from 49.4 to 60.5 pounds per kilowatt-hour at full load. These rates are very high when compared with the economy of small De Laval and Curtis turbines as given in Figs. 91c and 128. Parsons stated in 1904 that the full-load steam consumption of turbine-generators of his design under the conditions of 100 degrees F. superheat, 27 inches vacuum, and 155 pounds per square inch absolute steam pressure was approximately 25 pounds per kilowatt-hour for one of 100 kilowatts capacity, while that of the 200 and 500 kilowatt sizes

* It must not, however, be overlooked that these standard conditions were selected in the first place for comparing the economy of steam turbines. It happens that the vacuum is taken a little higher than is usual in the operation of reciprocating engines.

† "Economy Tests of High Speed Engines," by F. W. Dean and A. C. Wood, *Proc. American Soc. Mech. Engineers*, vol. 27.

was respectively 22 and 20 pounds. He stated that the equivalent results with dry saturated steam and 28 inches vacuum would be about ten per cent. larger.*

It has been shown by repeated tests that the steam consumption of these turbines is not materially increased when operated continuously for long periods. Weithammer † states that he made tests of a De Laval turbine-generator when new and after five years of service, and calculated the deterioration in economy to be not more than two per cent.; and this lower efficiency was probably largely due to wear of the reduction gears. It would appear that the deterioration of Curtis turbines should be even less because of less erosion from steam at very high velocities and the absence of the reduction gears. It is stated that there are cases where De Laval blades have been so much worn as to require replacing in a year.‡ Such an experience is, however, unusual.

POWER PLANT ECONOMICS.

The following table prepared by Mr. H. G. Stott of New York is interesting in many of its items. Actual data were used to determine the values under the heads of "Maintenance" and "Operation." The first column is for a plant with compound condensing reciprocating engines operating without superheat, and in all cases the values have been suitably corrected to make the other columns directly comparable with the first.

Mr. Stott advocates the use of an exhaust steam turbine to be operated by the exhaust steam from reciprocating engines. By increasing the pressure of the steam supplied a moderate amount as well as superheating it the output of a power plant of the type represented by the first column in the table can be doubled at a comparatively small cost for turbines and boilers.

* *Trans. Inst. of Electrical Engineers*, vol. XXIII.

† *Die Dampfturbinen*, page 104.

‡ Lea and Meden, *Transactions American Soc. Mechanical Engineers*, vol. 25.

DISTRIBUTION OF MAINTENANCE AND OPERATION.
(Charges per Kilowatt-Hour.)

	Reciprocating Engines.	Steam Turbines.	Reciprocating Engines and Steam Turbines.	Gas Engine Plant.	Gas Engines and Steam Turbines.
Maintenance.					
1. Engine room, mechanical....	2.57	0.51	1.54	2.57	1.54
2. Boiler room or producer room	4.61	4.30	3.25	1.15	1.95
3. Coal and ash handling apparatus.....	0.58	0.54	0.44	0.29	0.29
4. Electrical apparatus.....	1.12	1.12	1.12	1.12	1.12
Operation.					
5. Coal and ash handling labor..	2.26	2.11	1.74	1.13	1.13
6. Removal of ashes.....	1.06	0.94	0.80	0.53	0.53
7. Dock rental.....	0.74	0.74	0.74	0.74	0.74
8. Boiler room, labor.....	7.15	6.68	5.46	1.79	3.03
9. Boiler room, oil, waste, etc...	0.17	0.17	0.17	0.17	0.17
10. Coal.....	61.30	57.30	46.87	26.31	25.77
11. Water.....	7.14	7.10	5.46	3.57	2.14
12. Engine room, "mechanical" labor.....	6.71	1.35	4.03	6.71	4.03
13. Lubrication.....	1.77	0.35	1.01	1.77	1.06
14. Waste, etc.....	0.30	0.30	0.30	0.30	0.30
15. "Electric" labor..... ...	2.52	2.52	2.52	2.52	2.52
Relative cost of maintenance and operation.....	100.00	86.03	75.72	50.67	46.32
Relative investment in per cent....	100.00	82.50	77.00	100.00	91.20

That the steam turbine plant has an inherent economy of 20 per cent. better than the best type of reciprocating engine installation is shown by a comparison of the first and second columns.

Prices of Steam Turbines. **Fig. 193** shows by means of curves the price **per kilowatt** of the **normal full load rating** of turbine-generators operating condensing. The prices given are the averages of those given by a number of manufacturers at a time when the cost of foundry pig iron was about $30 per ton. It is estimated that the values given by the curves will be changed roughly about 2 per cent. for a variation of $1 in the price of foundry pig iron.

Unless some such standard of values is given such results can be of little value a very short time after the curves are prepared.

Non-condensing turbines cost about 5 per cent. less than condensing machines. Prices of 25-cycle and 60-cycle generators are usually about the same. Prices do not include charges for freight and erection, which in the eastern and middle western states are about $1 to $1.50 per kilowatt.

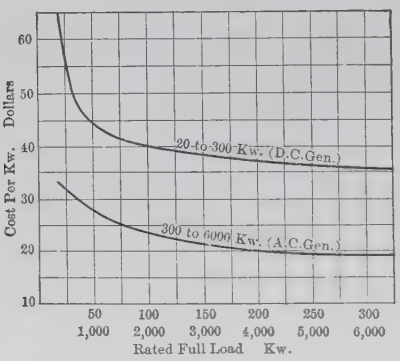

FIG. 193. Curves of the Approximate Price of Steam Turbine-Generators per Kilowatt of the Rated Full Load Output of the Generator.

Mr. W. C. Gottshall, who has very carefully investigated power plant economics, has collected the data on the following page, regarding the probable **maximum** and **minimum** costs per rated kilowatt installed of a power plant equipment of about 10,000 kilowatts capacity.

High-grade power stations of from 5000 to 10,000 kilowatts capacity with thoroughly modern equipments cost usually from $100 to $150 per kilowatt. In a few **very large stations** with **high-grade equipment** the cost has been about $120 per kilowatt installed; but for stations under 10,000 kilowatts' capacity the cost is rarely below $90 per kilowatt.

A building of modern factory type of construction (one story — steel and glass) costs about $2 per square foot of floor space.

COST OF A STEAM POWER HOUSE AND EQUIPMENT.

	Costs per Rated Kilowatt Installed.	
	Maximum.	Minimum.
Boilers and settings	$17.00	$9.00
Stokers	5.00	2.50
Economizers	4.50	2.50
Coal conveyors and bunkers	6.00	2.00
Ash conveyor	1.50	1.00
Piping and covering	12.00	4.00
Feed-water heater	2.00	1.00
Feed pumps	1.00	1.00
Engines or turbines	32.00	20.00
Generators	21.00	18.00
Condensers including pumps†	10.00	2.00
Switchboard	4.00	1.50
Power-house cables and conduits	6.00	3.00
Incidentals (as concrete floor and traveling crane)	3.00	2.00
Foundations for machinery‡	3.50	1.50
Buildings	15.00	10.00
Chimneys and flues	2.00	2.00
Total cost including 10 per cent. for engineering supervision and contingencies (nearly)	$158.00	$93.00

† The cost of condensers is not included in Gottshall's data. Prices given here are those given by J. R. Bibbins (*Report American St. Ry. Association*) for a plant operating at 26 inches vacuum. He estimates that the cost of a plant for 28 inches vacuum is 60 per cent. greater. Bibbins' values may be tabulated as follows:

Cost of Condensing Plant per Rated Kilowatt.

	Inches Vacuum.		
	26	28	29
Barometric condenser	$6 to $7.50	$9.50 to $12	$12 to $15
Surface condenser (including centrifugal lift pump, air cooler, single-cylinder dry vacuum pump, and centrifugal circulating pump)	$7.50 to $10	$12 to $16	$15 to $20
Surface condenser (including wet vacuum pump and centrifugal circulating pump)	$7.50 to $10	$12 to $16	$15 to $20
Ejector condenser	$2 to $2.50	$3 to $4	$4 to $5

‡ Engine and generator foundations cost from $1.00 to $3.50 per kilowatt capacity. Foundations for turbine-generators cost as a rule about one-fourth as much, usually 30 to 40 cents per kilowatt capacity on fairly good sub-soil.

Itemized costs of the 8500-kilowatt power plant of the Fort Wayne and Wabash Valley Railway Company at Fort Wayne, Ind., are given by Bibbins as follows:

Substation apparatus and buildings are, of course, not included. Drawings and a photograph of this station are shown in Figs. 199 and 200.

The double-deck arrangement and the installation of barometric condensers designed for a moderate vacuum make the first cost of this station very low.

	Dollars per Kilowatt.
Building: Including general concrete and steel work, coal bunker, smoke flue, condenser pit, coal storage pit, etc.	10.97
Boiler plant: Including boilers, superheaters, stokers, piping, pumps, heaters, settings, breechings, and tank	13.92
Generating plant: Including turbines, generators, exciters, cables, switchboards, transformers, and ventilating ducts	30.55
Condenser plant: Including condensers, pumps, piping, free exhausts, water tunnels, and intake screen	3.98
Coal-handling plant: Including gauntree crane, crusher motors, and track	0.94
Erection, superintendence, and engineering	5.94
Total, excluding property and siding	66.25

The costs are based upon the following assumptions:

	Per Cent.
(a) Bond interest and taxes	7
(b) Sinking fund, equivalent to 6.43 per cent. depreciation	4.2
(c) Total fixed charges on capital cost	11.2

In calculating the cost of an electric power plant it is necessary to consider the probable life of the plant, so as to make correct yearly reductions for depreciation. Often this is more or less of guess-work on the part of the constructor or owner, and for this reason the following table is interesting. The figures given are those used by two English public corporations, two consulting engineers, and a series of figures taken from various technical publications. Conditions in America are somewhat

different from those of Europe and the depreciation is usually somewhat greater.

ESTIMATED YEARS OF LIFE.

	Authority.				
	Local Gov't Board.	L. Canby Council.	Hammond.	Snell.	Various Publications.
Buildings	30	50	30–60	60	60
Boilers	15	20	10–20	20	15
Steam engines	15–25	30	20–25	25	20
Steam turbines*	10–20	20	10–20	20	20
Dynamos	20	20	25	25	20–25
Storage batteries	5–7	20	15	10	10
Transformers	15	20	15	20	20
Switchboards	25	20	20	20	15
Electric cables (conductors)	12–15	12–50	30	15–20	12–50
Electric meters	15	10	10	15	15
Arc lights	7–10	.....	10	15	.....

Depreciation may be roughly determined by summing the depreciation on the several parts of the plant as follows: building, 3 per cent.; boiler plant and coal-handling apparatus, 10 per cent.; condensing plant, 6 per cent.; generating plant (turbines and generators), 7.5 per cent.; general average, about 6.5 per cent.

Comparisons have been made by L. G. French of the cost of two sizes of turbine-generators with corresponding reciprocating engine costs. He states that the cost of a 750-kilowatt turbine-generator with a surface condenser (operating vacuum not given) and including foundations and installation charges was $37 per kilowatt. A similar reciprocating engine plant cost $40 per kilowatt. A 1500-kilowatt turbine-generator with a similar condenser equipment cost $30.20 per kilowatt, including foundations and installation, while a reciprocating engine equipped similarly cost $32.40 per kilowatt.

* Orrok of the N. Y. Edison Co. states that the company has had 40 small steam turbines of the impulse type in service for five years with practically no expense for repairs.

It is generally believed by engineers who have done recent work in the equipment of large new steam power stations that it is not very probable that large reciprocating engines will ever again be installed to develop power for electrical distribution. One reason is that turbine-driven alternators are particularly adaptable for parallel operation. The low first cost and operating expenses of turbine-generator units as well as the saving in the cost of foundations and floor space are also very important considerations. A manufacturer of very large sizes of both steam turbines and reciprocating engines has stated that a large power station if equipped with reciprocating engines instead of steam turbines would cost at least from 35 to 60 per cent. more than a turbine station of the same capacity.

The following interesting tests of the **power required to operate the auxiliary machinery** * needed for a Curtis turbine were reported by the Turbine Committee of the National Electric Light Association in 1905. The data apply to the auxiliaries of

* The quantity of circulating water required for high-vacuum condensing plants must be increased from the old standard of from 25 to 30 pounds to from 40 to 60 pounds of water per pound of steam condensed for moderate temperatures, and from 60 to 100 pounds of water per pound of steam when used at the higher temperatures common to cooling tower practice. In cases of excessive head or quantity of circulating water the bulk of the power required by auxiliaries is due to the circulating pump. The range of power for this purpose varies so widely that the older method of assuming a given type of plant requiring 5, 10, or 15 per cent. of the total steam consumption to drive auxiliaries is entirely in error without an accompanying statement defining conditions under which circulating water is pumped. The power to drive the air pump is dependent somewhat upon the vacuum, but particularly upon the air leakage into the condensing system. It was for some time assumed that the work of the air pump corresponded to removing the air which entered the boiler in solution in feed-water. As a matter of fact, handling the air in solution is the smallest portion of work done by an air pump, the leakage through piping, pipe joints, pores of castings, stuffing-boxes, etc., imposing the greatest duty, the total quantity of air to be handled ranging from ten or fifteen to thirty or forty times the air dissolved in ordinary water. The actual power to drive the air pump should in good practice be less than .00018 indicated horsepower in the air pump cylinder per pound of exhaust steam per hour. As the amount of power necessary to drive the air pump is a comparatively small portion of the total power for auxiliaries a slight error in this quantity will not largely affect the final result." — C. C. Moore, *Journal of Electricity, Power, and Gas*, March, 1905.

one of the 5000-kilowatt turbine-generators of the Boston Edison Company.

	Test 1.	Test 2.	Test 3.
Kilowatts on turbine	2713.	3410.	4758.
Vacuum	28.4	28.7	28.6
Barometer	29.53	29.95	29.96
	Horsepower Used.		
Boiler feed pump	13.9	23.7	27.4
Circulating pump	69.1	69.1	69.1
Dry vacuum pump	24.3	23.2	23.8
Step bearing pump	6.4	5.8	5.6
Wet vacuum pump	8.6	9.2	9.8
Totals	122.3	131.	135.7
Per cent. power of auxiliaries to power of turbine	3.4	2.9	2.1
Per cent. water used by auxiliaries to that used by turbine	8.4	7.4	5.7

PRACTICAL DESIGNING OF POWER STATIONS.

Special Fields for Steam Turbines and for Reciprocating Engines. Some space will be given here to the economic considerations entering into the design of a modern power station intended for electric distribution of power. There can be no doubt as to the status of the steam turbine in comparison with reciprocating engines for the generation of electrical energy. Practically all the recently designed power stations for electric services are equipped with steam turbine-generators, and in some of the older stations built originally for engine-driven units it is not unusual to see turbines installed to increase the capacity.* There is a marked contrast between a power station equipped with reciprocating engines and one that is turbine-driven. The large and heavy frames, ponderous moving parts, and the large generators of reciprocating engine plants cannot be made to compete successfully with the smaller, more compact, and cheaper turbine units. But, on the other hand, reciprocating

* W. C. L. Eglin, *Report National Electric Light Association.*

engines similar to the Corliss type have a field which for a number of years probably, the steam turbine cannot enter successfully. For irregular loads, suddenly applied, like those of rolling

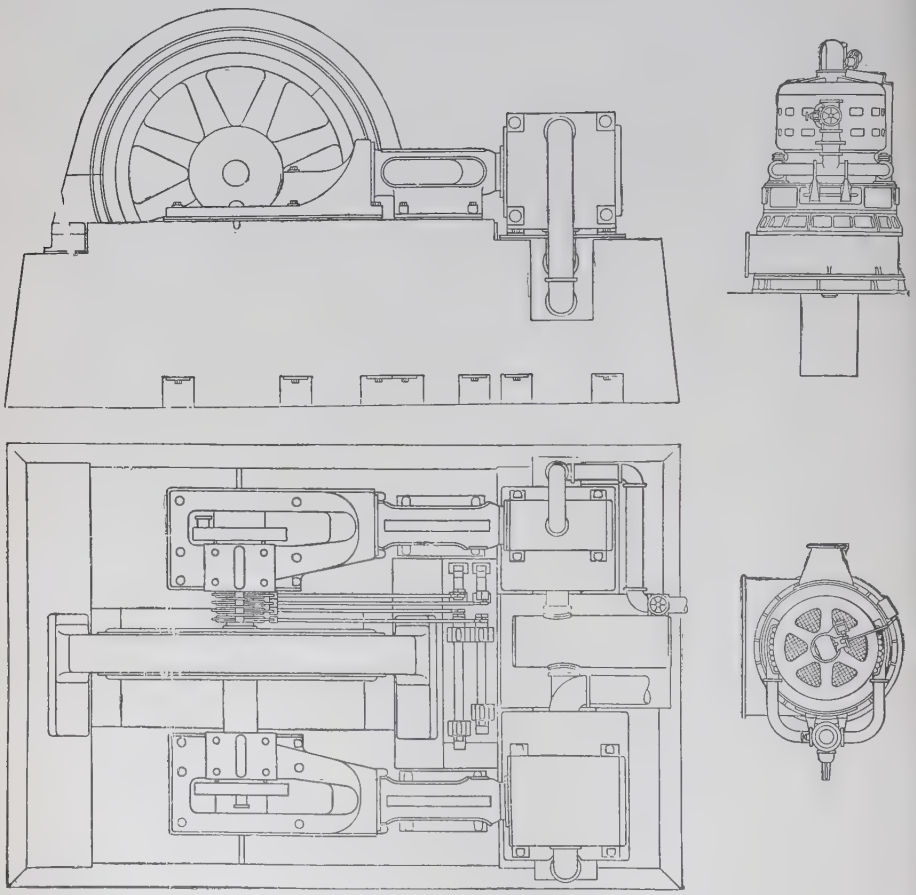

Fig. 195. Comparative Floor Space Required for Vertical Type Curtis Turbines.

mills and mine hoists the reciprocating engine has advantages over the steam turbine, except perhaps when the turbine is used in connection with an electric drive. Because reciprocating

water pumps and air compressors are more efficient, at least up to the present time, than centrifugal pumps and compressors, reciprocating engines are invariably installed in waterworks and compressing plants. In cotton and woolen mills and shops, where the power is transmitted by belts, shafting, and ropes instead of by electrical methods, the reciprocating engine because of its slower speed is generally preferable.

Stated in a few words, the steam turbine is unrivaled by steam reciprocating engines for driving apparatus which can be operated efficiently at a high speed so that a direct-connected unit can be made.

Parallel operation of alternators is greatly facilitated when they are driven by turbines rather than by reciprocating engines. There are always difficulties when reciprocating motion is to be converted into synchronous motion. Besides the advantages of a uniform turning moment which makes possible such close speed regulation that it is possible to operate railway, power, and lighting circuits from one turbine, because of its high speed it produces a more powerful regulating force without the use of a fly-wheel than that of any engine-driven units of the same capacity. Where a steam turbine is installed in a plant with piston engines or water-wheels its **inertia** or **fly-wheel effect** has a steadying effect on the whole system. As an example of this inertia effect it is stated * that a 3500-kilowatt Curtis turbine and generator has at the rated speed (750 r.p.m.) a "storage energy" of 30,600,000 foot-pounds which is sufficient to enable the machine to carry at any load an additional load equal to the full rating for about .75 of a second with a drop in speed of only 3 per cent. and without additional steam. This machine could carry a momentary increase of load of half the rating for 1.5 seconds.

Floor Space for Power Plants. "Compactness" expresses well the primary requisite for the economical design of modern power stations. The small space occupied by a Curtis steam turbine compared with that required for a reciprocating (Corliss) engine

* A. H. Kruesi, *Proc. American Street and Interurban Railway Association.*

of the same capacity is well shown by **Fig. 195.** Floor space occupied by Westinghouse turbine-generators is given by the curves in **Fig. 196,** showing the number of square feet occupied per kilowatt or per brake horsepower. Comparisons of the space required for power units are of little value, however, unless the space for the condensing apparatus and auxiliary machinery is also considered. It is probably fair to assume that for the

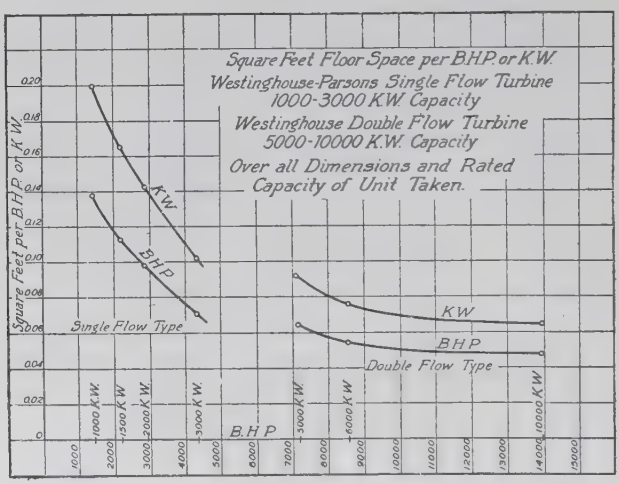

FIG 196. Floor Space Required for Westinghouse Turbines.

conditions where a reciprocating engine would be operated at 26 inches vacuum condensers for a turbine plant would be designed for 28 inches vacuum. Now the volume of steam at 26 inches vacuum is very nearly half that at 28 inches. When surface condensers are used, therefore, the very great increase in the size of the condenser equipment for turbine plants is very obvious. For this reason there has been a tendency in recent years to install barometric or the open type of jet condenser for steam turbines.

A very recent installation of Westinghouse-Parsons turbines, barometric condensers, and Stirling boilers is illustrated in

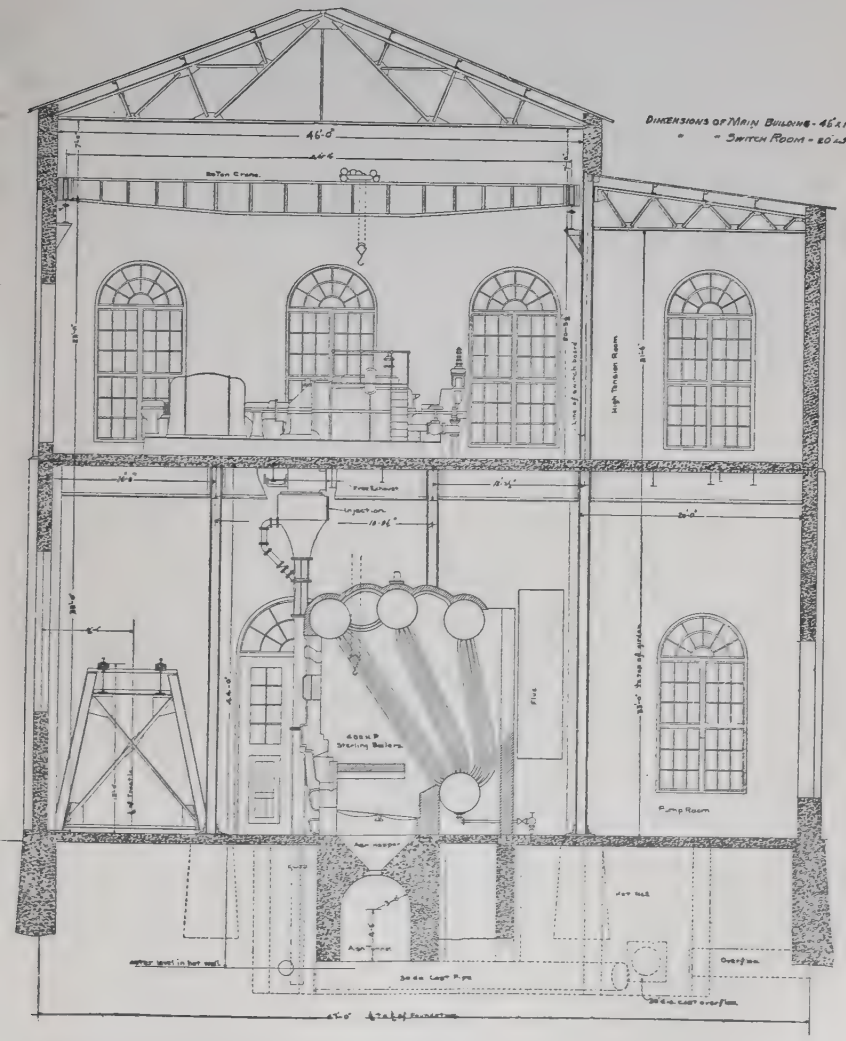

FIG. 197. "Double-Deck" Design of Power House Equipped with Horizontal Turbines.

Fig. 197.* The important features of this design are the placing of the turbines above the boilers and condensers, the use of

* J. R. Bibbins, *Trans. Am. Inst. Elect. Eng*

barometric condensers, and the low total cost of power house and equipment. It is probably one of the most compact arrangements possible in a steam turbine plant consistent with high economy in operation.

In this "double-deck" design the horizontal turbine and barometric condensers are at their best advantage as regards compactness and efficiency.* The connections between the turbines and the condensers are short and direct, which obviates the losses occurring where there are bends in these connections, and the cost of large exhaust piping is saved. The atmospheric relief valve of the turbine is placed between the floor girders, so that it was possible to make the distance between the floor level and the condenser head only 2.5 feet. For stations not at tide-water, turbine plants are usually operated at a moderate vacuum of between 27 and 28 inches. Barometric condensers are now being made to maintain this vacuum without the use of auxiliary dry-air pumps.

With surface condensers by far the most compact arrangement is obtained by installing Curtis vertical turbines with a condenser base. By this arrangement a very direct connection between the turbine and the condenser is secured; but in places where there is likely to be trouble with leaky tubes most engineers will prefer a condenser separate from the turbine.

Drawings showing the cross-section and plan of a design for horizontal turbines, Babcock & Wilcox boilers, and barometric condensers are shown in **Fig. 199.** An exterior view of the same station showing the coal-handling equipment is illustrated by **Fig. 200.**

Plan and elevation of a power station with the turbines and boilers on approximately the same floor level are represented by the drawings in **Figs. 201** and **202.** The first of these figures is particularly interesting because it shows very clearly the arrange-

* A similar "double-deck" arrangement has been proposed for power plants operated by horizontal gas engines and producers. In such a design, where producers, scrubbers, and all auxiliaries are placed on the second floor, it has been shown that the ground-floor area was only 2.25 square feet per kilowatt.

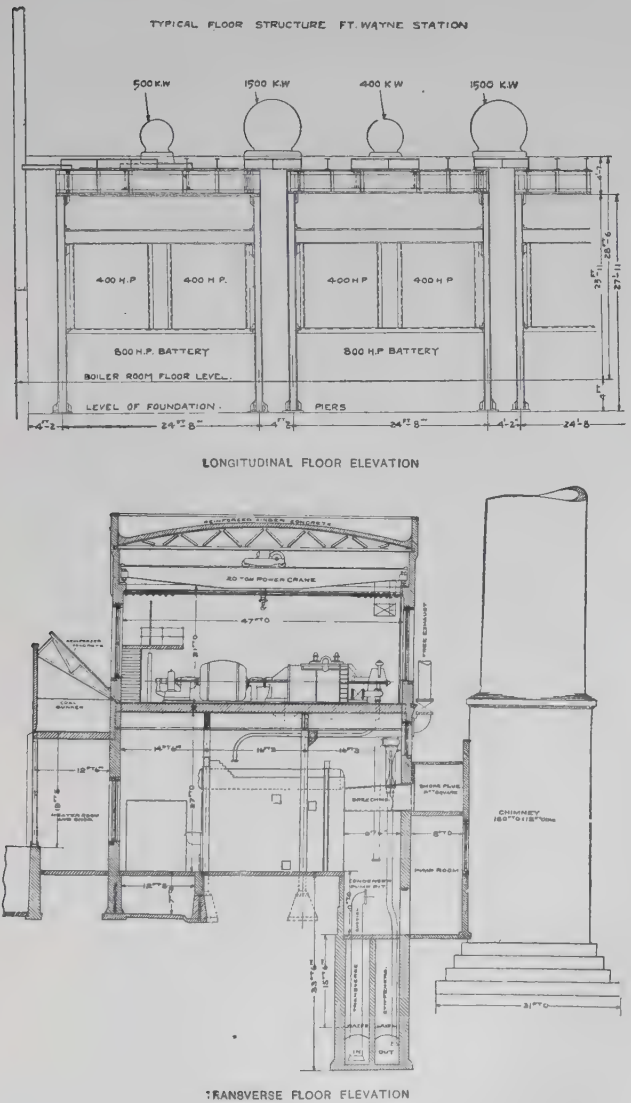

FIG 199. Longitudinal and Transverse Sections of Power Station.

ment of the auxiliaries in stations equipped with surface condensers. **Fig. 203** is intended to show particularly the **piping arrangements** for a typical power station having the turbines and auxiliary equipment in a room adjoining the boiler room.

FIG. 200. View of the Power House Shown in Fig. 199.

OILING SYSTEMS FOR STEAM TURBINES.

A perfect oiling system is obviously a necessity for any machinery operating at a high speed. The efficiency of turbines of the Parsons type depends largely on the smallness of the radial clearances between the rotor and the casing. Now if there is any displacement of the rotor with respect to the casing, caused, for example, by the melting of the white-metal in one of the main bearings, the blading might be entirely torn or "stripped," and the turbine would probably be out of service for several weeks. In Curtis turbines with vertical shafts, on the other hand, very serious results might occur if the flow of oil to the step bearing should be interrupted.

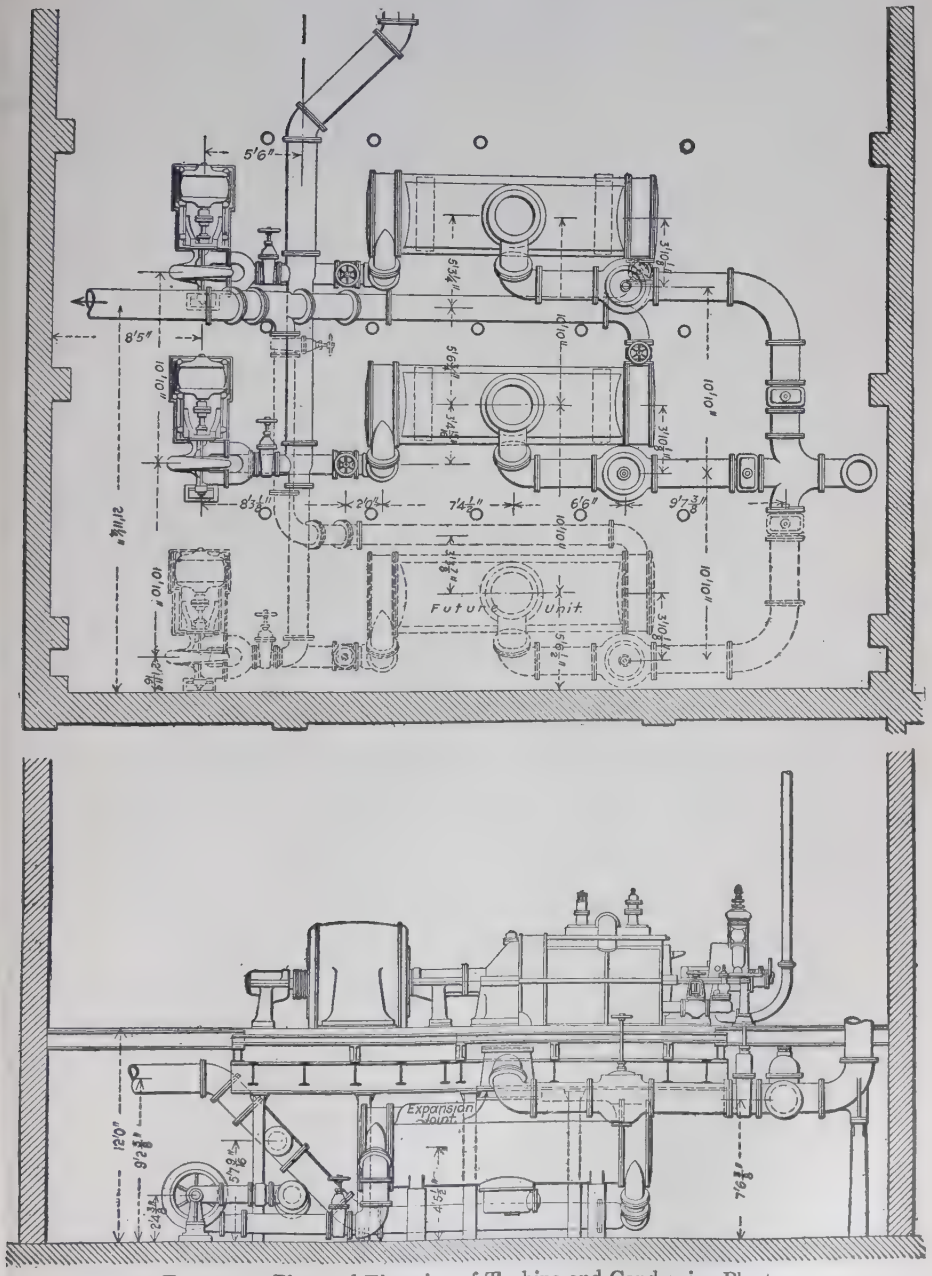

FIG. 201. Plan and Elevation of Turbine and Condensing Plant.

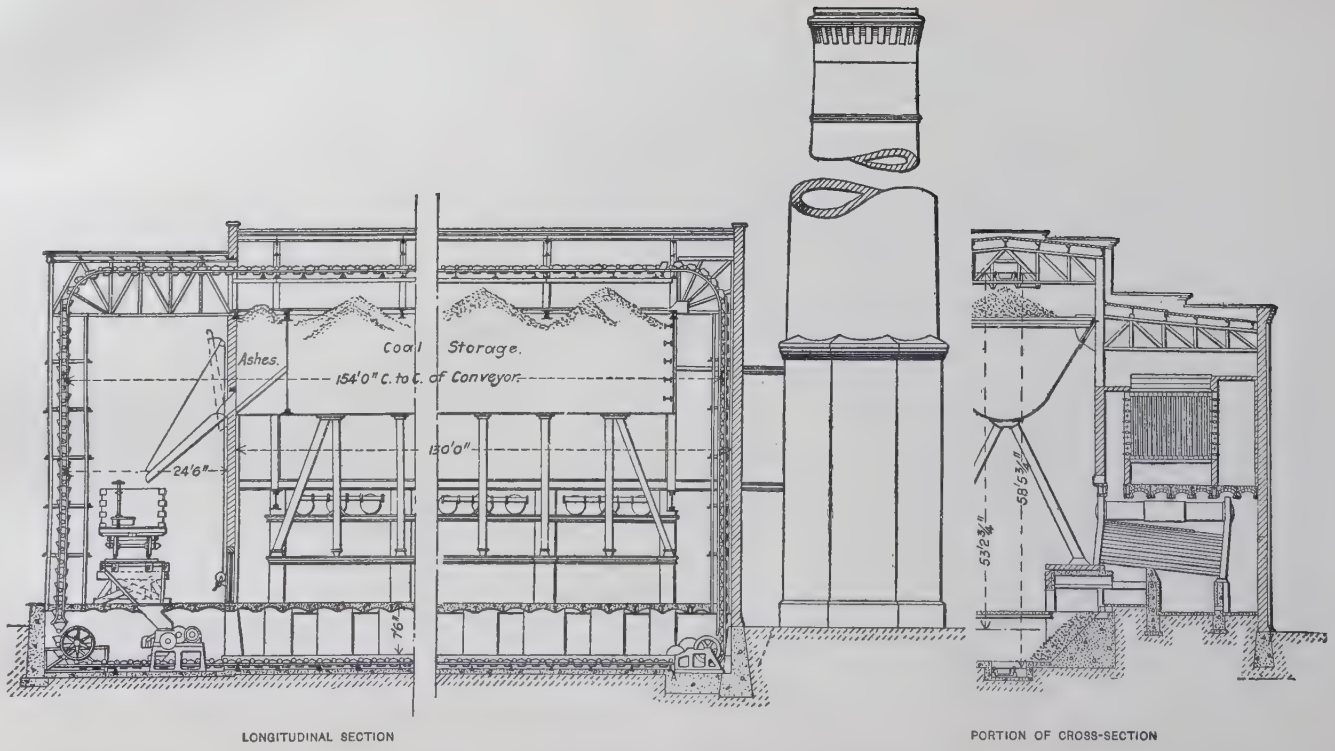

FIG. 202. A Typical Boiler Plant for a Turbine Station.

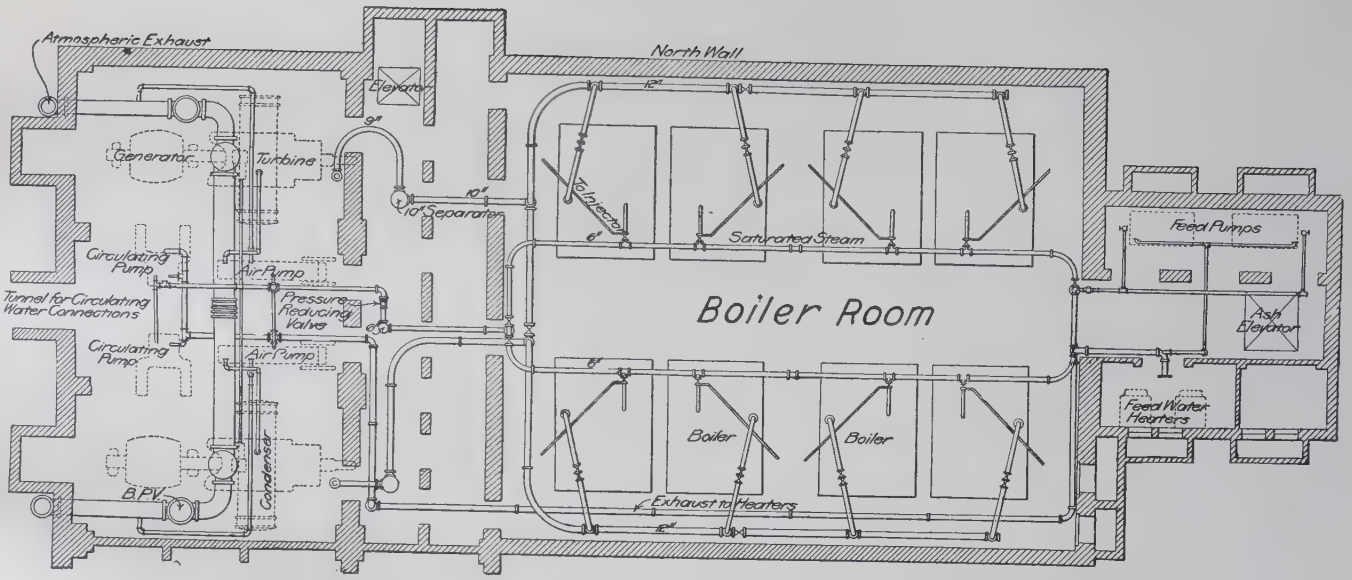

FIG. 203. General Plan of a Turbine Station Building, Showing Arrangement of Auxiliary Equipment and Piping.

There are two usual methods of lubrication for steam turbines: (1) the central system and (2) the single unit system.

In the case of the central system an oil tank is placed at a high point in the building and the oil flows through pipes by gravity to the bearings of the turbine. By means of a "parallel" system of piping any number of turbines can be supplied from one oil tank. The oil leaving the bearings flows into a suitable filtering apparatus provided with cooling coils from which it is pumped back to the main supply tank. The chief objection to this system is the danger of a total shut-down of the oiling system caused by a poor joint or a broken pipe between the supply tank and the turbine bearings.

The alternate system, in which each turbine has its own oil supply and pump, has the advantage in that it assists in reducing the risk of a total shut-down of the plant to a minimum, and if the oil is spoiled in one turbine, due to being mixed with water or being overheated, the entire supply of the station is not ruined.

Until recently nearly all manufacturers of Parsons turbines supplied their machines with plunger reciprocating oil pumps. In this respect an innovation has been introduced in Westinghouse turbines by the use of a rotary oil pump shown in **Fig. 204.** In the drawings shown here there are two sectional views of the pump. A worm gear on the turbine shaft transmits power to the pump by means of the gear wheel **10.** The direction of rotation of the shaft and of the flow of oil is shown by arrows in the sections. The pump cylinder and its rotor are not concentric, and metal strips, backed by springs, are inserted into slots in the rotor. These strips are forced out by the springs to touch the inside of the pump cylinder in every position, so as to form pockets into which the oil enters on one side and is discharged from the other side. Similar rotary pumps are very generally used for all kinds of engineering services.

Piping for Superheated Steam. Much of the trouble resulting from the use of superheated steam is due not so much to want of strength as to the want of elasticity in the parts affected. These

troubles are due particularly to the unceasing variations in temperature resulting from fluctuating loads rather than from high temperatures. As it is possible for water to exist in the liquid state in superheated steam, the variations in temperature may produce a spraying of highly heated surfaces, which greatly increases these difficulties. Changes in the design of pipe

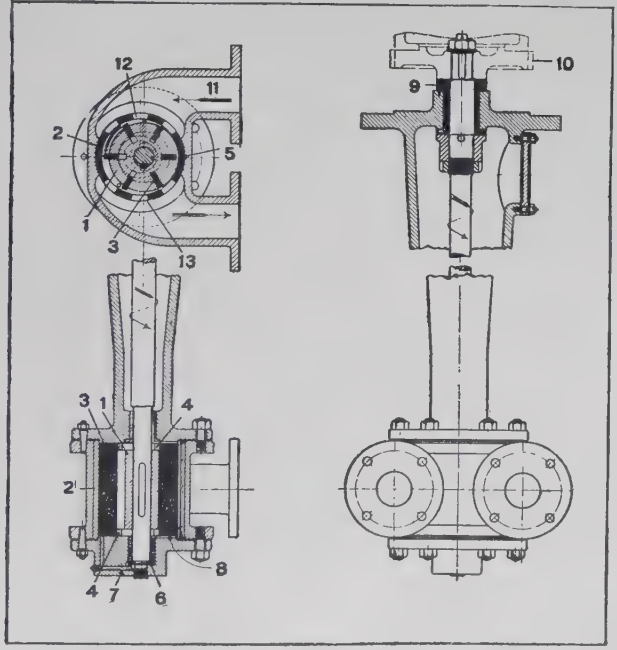

Fig. 204. Westinghouse Oil Pump.

fittings, valves, boilers, and superheaters should be made to allow for this abnormal condition. It is desirable to use annealed steel castings in place of cast-iron for fittings and valve casings, and the use of copper for internal parts of valves and gaskets should be avoided. Low velocities in steam piping, which have become customary on account of the pulsating flow of reciprocating steam engines, are not suitable for superheated steam. Since flexibility is so important a consideration in piping for

superheated steam, it is necessary to use comparatively small sizes of pipes and fittings.

In Curtis turbines, Kruesi states, a velocity of at least 140 feet per second (about 8500 feet per minute) is desirable for dry saturated steam. Now if the steam is superheated 100 degrees F. the volume is increased 15 per cent., but "the velocity in the pipes will be substantially the same on account of the reduction in the steam consumption of the turbine." Although this statement is not quite accurate because the steam consumption of Curtis turbines is usually reduced only 8 to 10 per cent. per 100 degrees F. superheat, it is an important observation that the size of piping should not be increased in proportion to the increase in volume of the steam due to superheating.

CHAPTER XV.

STRESSES IN RINGS, DRUMS, AND DISKS.

Design of a Bucket Band or Ring. A ring or band is one of the simplest means of fastening together a number of separate pieces attached like the blades of a turbine wheel to the circumference of a cylindrical surface. Such bands are always made a little wider than the blades, especially at the side where the steam enters, so that the edges of the blades may not be easily damaged in transportation and from insufficient axial clearances when the turbine is operated.

These bands are very serviceable in taking care of loose buckets which otherwise would be troublesome. The band serves to bind the blades together as a whole, making the blades with weak attachments to the wheel as good as the strongest. The band assists in making a row of blades of uniform strength.*

The design of such a ring revolving at high speeds should be determined by careful calculations; but the theory underlying the design of such a ring serves also for the design of turbine drums and disks.

Centrifugal forces more than any other considerations determine the design of a blade ring or band for strength. These forces produce, of course, tension and a resulting expansion of the ring — both of significant importance.

The **centrifugal force** (CF) **in any sector** (W pounds) of a

* In a Parsons type it cannot be assumed, however, that because the blades can be made stiffer by the use of a band or shroud ring it is possible to reduce radial clearances below the normal amount and at the same time reduce leakage around the blades. There is reason for believing that radial clearances should be increased for satisfactory operation when the "band" construction is used unless the relative expansion of the metals in the ring, blades, drum, and casing is very carefully adjusted.

freely rotating ring of radius **r** inches, velocity **V** feet per second, with an angle θ subtended by the sector, is

$$CF = \frac{WV^2}{g\frac{r}{12}}, \qquad (31)$$

where **g** is the acceleration due to gravity.

This centrifugal force tending to expand the ring by increasing its circumferential dimensions sets up stresses which, for the purposes of calculation, may be represented by **tangential forces** at the ends of the sector. These forces are necessarily equal for equilibrium and are shown as **T** and **T** in **Fig. 208.** If the breadth of the sector is represented by **m** inches and the radial thickness by **n** inches, then the area of the section over which this stress is distributed is **mn** square inches; and if **S** is the unit tensile stress in pounds per square inch, each tangential force is expressed by

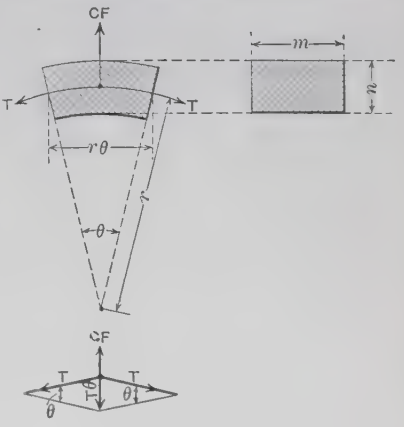

FIG. 208. Forces in the Blade Band or Shroud Ring.

$$T = mnS.$$

This force **T** on the section is tangential, and since the radial centrifugal force (**CF**) must be equilibrated by an equivalent radial force $T\theta$ * or for equilibrium

$$CF = T\theta \dagger,$$
$$\frac{WV^2}{g\frac{r}{12}} = mnS\theta.$$

* This relation is obvious from the geometry of the figure. It is, of course, not quite accurate, but very nearly correct for small values of θ.

† It cannot be assumed that at the moment of rupture the stress will be distributed between the two sections. The assumption made in the equations is, however, very much on the safe side.

Now if z is the weight in pounds of a cubic inch of the material of the ring, the length of the sector (Fig. 208) is $r\theta$ inches; then

$$W = mnr\theta z,$$

$$\frac{mnr\theta zV^2}{g\frac{r}{12}} = mnS\theta,$$

$$S = \frac{12\,zV^2}{g}. \qquad (32)$$

This equation shows that the unit stress in a blade ring or band depends only on the weight of the material and on the peripheral velocity. The last equation can also be expressed in another form, remembering that

$$V = \frac{3.1416\,dN}{60 \times 12},$$

where d is the diameter in inches to the central line of the ring and N is the number of revolutions per minute. Then if we make the approximation of $\pi^2 = 10$, we have

$$S = \frac{zd^2N^2}{g \times 4320},$$

$$S = \frac{zd^2N^2}{139{,}100}. \qquad (33)$$

Equations (32) and (33) are generally used for the design of shroudings and overhanging rims. When such rings are perforated with small holes for the riveting of blades, bending and shear are produced. The stresses due to this bending and shear are, however, small and do not in practical cases often exceed 400 pounds per square inch.

Sometimes rings called "segments" (Fig. 115) are put on the edge of wheel disks and the blades are attached to them. In a construction of this kind the ring must not only restrain the centrifugal force due to its own weight, but also part of that from the weight of the blades if they are not tightly fitted.

If the following symbols are assumed:

r_0 = radius to center line of blades, in inches,
d_0 = diameter to center line of blades, in inches,
w = weight of blades in pounds **per foot** of length of the circumference measured to the center line of the blade ring,
$r\theta$ = length of a short segment of the blade ring to be calculated, in inches,
V_0 = peripheral velocity of blades, in feet per second,
W_0 = weight of the blades, in pounds, of a segment $r_0\theta$ inches long or $\frac{wr_0\theta}{12}$ pounds,

then the **centrifugal force** at the blade ring due to the weight of the blades alone is

$$C_0 = \frac{W_0 V_0^2}{g\,\frac{r_0}{12}} = \frac{wr_0\theta V_0^2}{gr_0} = \frac{w\theta V_0^2}{g}.$$

Then if T_0 is the tangential force in the blade ring due to the weight of the blades, and S_0 is the corresponding unit tensile stress in pounds per square inch,

$$C_0 = T_0\theta = mnS_0\theta \text{ and}$$

$$\frac{w\theta V_0^2}{g} = mnS_0\theta,$$

$$S_0 = \frac{wV_0^2}{gmn},$$

or

$$S_0 = \frac{w\pi^2 d_0^2 N^2}{518{,}400\ gmn} = \frac{wd_0^2 N^2}{51{,}840\ gmn} = \frac{wd_0^2 N^2}{1{,}669{,}200\ mn}, \qquad (34)$$

then the total stress S_t due to the weight of the ring and of the blades is

$$S_t = \frac{zd^2 N^2}{139{,}100} + \frac{wd_0^2 N^2}{1{,}669{,}200\ mn},$$

$$S_t = \frac{N^2}{1{,}669{,}200}\left(12\ zd^2 + \frac{wd_0^2}{mn}\right). \qquad (35)$$

If a blade band or shroud is made in a solid ring and is shrunk on the outside of the blades, as is sometimes the case, then the elongation of the ring due to the centrifugal stresses must be allowed for. In other words, the ring must be made small enough so that there will be a tight fit at the highest speed that will ever be attained.*

Design of Drums for the Rotors of Reaction Turbines. The blades of steam turbines are, as a rule, fastened to a cylindrical drum or to one or more disks. The drum construction is used where there is a large number of stages with a small drop of pressure between the successive stages and usually comparatively low peripheral speeds. Thus the rotor of a Parsons type is made up of a number of drums of different diameters, increasing in size toward the low-pressure end. The drum diameters are determined by the blade speed which is selected by the designer to give approximately the best efficiency for the velocity of the steam in the stages of each section of the rotor.

Calculations to determine the thickness of a section of the drum are the same in principle as for a blade ring as explained in the preceding paragraphs.

The thickness of the drum shell is most simply determined by making calculations in the following order:

(1) Calculate the stress in the cylindrical shell of the drum due to its own weight by equation (**33**). This stress can be determined immediately because it is independent of all dimensions of the drum except the diameter of the shell at its center line. It is assumed, of course, that before the thickness of the

* If s = elongation per inch of length,
S = the unit stress lbs. per sq. inch in the ring at the maximum speed attained,
E = modulus of elasticity in lbs. per sq. inch,
then $s = \frac{S}{E}$, and the total elongation of circumference is $\frac{\pi DS}{E}$ inches.
This means then that the circumference of the ring must be made $\frac{\pi DS}{E}$ inches smaller than if not subjected to centrifugal stress. A very common construction is, however, that of making the ring in segments of about 2 feet in length and riveting the blades to these segments.

metal for the drum is to be determined, the blades have been designed so that their weight can be calculated.

(2) **Allowable unit tensile stress** must be determined. In this connection the factors to be considered are the qualities of the material to be used (see pages 485 and 486) and the grade of workmanship that is available. In some shops in Germany where very expert workmen can be secured and the material is carefully selected and unusually good, a **factor of safety** as low as three is sometimes used. Manufacturers of De Laval turbine wheels make the limiting factor from four to five; but for average American practice a factor of safety of less than five should not be considered. If nickel steel is to be used of which the ultimate strength is say 120,000 pounds per square inch, with a factor of safety of five, the **allowable total stress in the drum shell** would be 24,000 pounds per square inch. Now if the stress due to its own weight, of which the calculation has already been indicated, is still represented by the symbol **S**, and the total stress allowable by S_t, then the permissible stress resulting from the weight of the blades S_0 is

$$S_0 = S_t - S = 24{,}000 - S.$$

(3) The **thickness of the drum shell can now be calculated** by equation (34). Since S_0 is now determined and d_0, **N**, and **w*** are given by the dimensions required for the design of the blades, the thickness **n** can be easily calculated.

Equation (34) can be written in the form

$$mn = \frac{wd_0^2N^2}{1{,}669{,}200 \times S_0}. \qquad (36)$$

Since the weight of the blades has been calculated for only **one row,** the dimension **m** is the distance between the center lines of successive blade rows on the drum.

* Blades made of bronze, zinc, copper, or similar alloys weigh about .30 pound per cubic inch, and steel weighs .28 pound per cubic inch.

Example. The following data regarding the shell of a section of a turbine rotor are given by the drawings accompanying the blade design.

Diameter at root of blades (approximately = d)	25 inches
Diameter at center line of blades (d_0)	30 inches
Revolutions per minute	2000
Weight of blades in one row, per foot (w)	5 pounds
Weight of a cubic inch of material of shell	.28 pound
Distance between center lines of successive rows of blades of the drum	3 inches

The stress in the shell (S) due to its own weight, by equation (30), is

$$S = \frac{.28(25)^2\ (2000)^2}{139{,}100} = 5030 \text{ pounds per square inch.}$$

$$S_0 = 24{,}000 - 5030 = 18{,}970 \text{ pounds per square inch.}$$

$$mn = \frac{5(30)^2\ (2000)^2}{1{,}669{,}200 \times 18{,}970} = .57 \text{ square inch.}$$

But $m = 3$ inches; then

$$n = .57 \div 3 = .19 \text{ inch.}$$

The sections of the rotor are usually supported on disks attached to the shaft. In another paragraph relating to the design of disks, the strength of such forms will be discussed. It should be remembered that, compared with impulse turbines, the peripheral speed is always kept low.* Drums are almost always used for reaction turbines, and separate disks or wheels for impulse turbines.

Fig. 209 is an exact copy of the shop drawing of the rotor of an Allis-Chalmers (Parsons type) turbine. It consists of a central cylinder upon which rings are fitted as shown. These rings are made of steel and are forged as a solid ring. The webs are formed by cutting away the superfluous material in the sides with a lathe. In this type of rotor the central cylinder must be made of sufficient strength to resist the usual torsional stresses

* The peripheral velocity of drum types should not exceed 400 feet per second. Impulse wheels, however, are sometimes designed to operate at 1200 feet per second.

in a "hollow" shaft. The construction of the drums of typical Westinghouse turbines is shown in Figs. 107, 109 and 184.

In impulse turbines where all the expansion of the steam takes place in nozzles placed in diaphragms, or partitions between the stages, there is a large drop in pressure between any two stages, and therefore leakage of steam between the stages will be much greater than with the small pressure drop in the reaction type. The fewer number of stages in the impulse turbine necessarily

FIG. 209. Section of the Rotor of a Parsons Type of Reaction Turbine.

increases the velocity of the steam passing through the blades and at the same time the most economical wheel speed. Within practical limits, wheel speed should always be increased with steam velocity in good designing.

Stresses at Right Angles to Each Other. To determine the stress in flat disks a refinement in the calculations is sometimes necessary in order to obtain more accurate values than those secured in the preceding calculations for the stresses in rings and drums. If, for example, two forces **R** and **T** act **at right angles** to each other, theoretical conditions of elasticity show that the maximum stress or elongation is never quite equal to that due to either of the two forces if acting alone. In other words, an elongation in the direction of the line of action of the force **R** produces a contraction in the direction of the force **T**.* Thus

* This phenomenon is easily observed in a piece of india-rubber. A force in one direction producing an elongation will produce also a contraction in the direction at right angles to the greatest elongation.

if the elongation due to the force **R** is s_r per unit of length we have the relation

$$s_r = \frac{S_r}{E} *$$

where S_r is the stress in pounds per square inch and **E** is the modulus of elasticity of the material. The reduction (s_{nr}) of the dimension at right angles or normal to the direction of the force producing the elongation is proportional to the force itself and also, of course, to the stress. Then

$$s_{nr} = ks_r = \frac{kS_r}{E},$$

where **k** is a constant and has the value of .3 for metals of a homogeneous structure, such as are usually required for the manufacture of machines.

The force **T** in the same way produces elongation

$$s_t = \frac{S_t}{E}$$

and a reduction at right angles (s_{nt}) (in direction opposite to the elongation due to S_r),

$$s_{nt} = \frac{kS_t}{E}.$$

The net elongation in the direction of the force **R** is

$$s_r - s_{nt} = \frac{S_r}{E} - \frac{kS_t}{E} = \frac{1}{E}(S_r - .3\,S_t).$$

Also the net elongation in the direction of the force **T** is

$$s_t - s_{nr} = \frac{S_t}{E} - \frac{kS_t}{E} = \frac{1}{E}(S_t - .3\,S_r).$$

When the two stresses at right angles are nearly equal, as in the case of the disk now under consideration, the elongation is, from the results above, only .7 of that resulting from either force

* See Greene's *Structural Mechanics*, pages 7 and 184; Church's *Mechanics of Engineering*, p. 203.

acting alone. It follows also that when the stresses **are nearly equal** the stresses which are, of course, proportional to deformations are also only .7 of that calculated from only one of the forces. This effect of forces at right angles to each other will be applied in the discussion of the stresses in disks.

Mathematical Treatment of Stresses in Disks. **Fig. 210** shows a section of a turbine wheel cut out (1) by two radial planes making the angle θ with each other, and (2) by the cylindrical surfaces with radiuses of **r** and **r** + d**r**. The two other bounding surfaces are the sides of the disk. The thicknesses of the disk are **t** at the radius **r**, and **t** + d**t** at the radius **r** + d**r**.

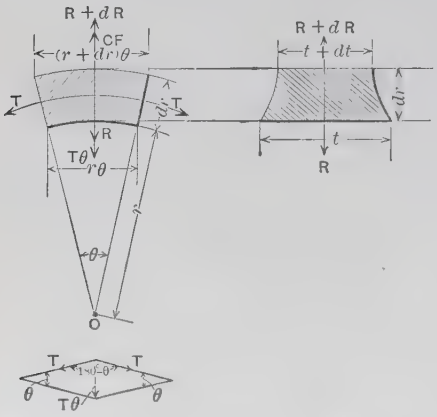

FIG. 210. Diagram of Disk Stresses.

If this sector is rotated about the center **O** it develops the centrifugal force (**CF**). Acting on the surfaces of the sector are also the forces **R** and **R** + d**R** in the radial direction and the forces **T, T** in tangential directions. The two tangential forces **T, T** form the angle 180 − θ degrees with each other, and their resultant is approximately **T**θ when θ is a small angle. We have, then,

$$\text{Forces acting outward} = \mathbf{R} + d\mathbf{R} + \mathbf{CF}.$$
$$\text{Forces acting inward} = \mathbf{R} + \mathbf{T}\theta.$$

If we call the unit stress in the radial direction S_r and in tangential direction S_t, then at a section at radius **r** (if **all the dimensions are in inches**) the following relations result:

$$\mathbf{R} = \mathrm{r}\theta\mathrm{t}S_r,$$
$$\mathbf{R} + d\mathbf{R} = (\mathrm{r} + d\mathrm{r})\ (\mathrm{t} + d\mathrm{t})\ (S_r + dS_r)\theta,$$
$$\mathbf{T} = \mathrm{t}d\mathrm{r}S_t,$$
$$\mathbf{T}\theta = \mathrm{t}d\mathrm{r}\theta S_t.$$

If V is the velocity in inches per second and w is the weight of a cubic inch (the specific weight), then the volume of the sector is very nearly $t\theta r dr$, and

$$CF = t\theta dr \frac{wV^2}{g}.$$

For equilibrium, the sum of the forces acting outward equals the sum of those acting inward, or

$$R + dR + CF = R + T\theta, \text{ or}$$

$$(r + dr)\,(t + dt)\,(S_r + dS_r)\,\theta + \frac{t\theta dr w V^2}{g} = r\theta t S_r + t dr \theta S_t.$$

Dividing through by θ and neglecting infinitesimals of the second order, we have

$$r(t dS_r + S_r dt) + t dr\,(S_r - S_t) + \frac{wt dr V^2}{g} = 0. \quad (37)$$

This general equation is not suitable for calculations, but by assuming conditions of uniform strength or uniform thickness the form can be considerably simplified.

Disk of Uniform Strength. If we assume, then, uniform strength in the disk, the stresses throughout are constant, and if S′ is the stress at any point, then

$$S' = S_r = S_t = \text{constant value}$$

and therefore

$dS' = 0$, and substituting these values in equation (37)

$$r dt S' + \frac{w}{g} t V^2 dr = 0,$$

$$\frac{dt}{t} + \frac{wV^2 dr}{gS'r} = 0,$$

$$\frac{dt}{t} + \frac{w}{gS'} \times \frac{\omega^2 r^2 dr}{r} = 0, \text{ and by integrating,}$$

$$\log t + \frac{w}{gS'} \times \frac{\omega^2 r^2}{2} + K^* = 0.$$

* K is a constant of integration.

Now when $r = 0$, $t = t_0$, and $K = -\log t_0$, so that

$$\log t + \frac{w}{gS'} \times \frac{\omega^2 r^2}{2} + (-\log t_0) = 0,$$

$$\log\left(\frac{t}{t_0}\right) = -\frac{w}{gS'} \times \frac{\omega^2 r^2}{2} = -\frac{wV^2}{2gS'}, *$$

$$\frac{t}{t_0} = e^{-\frac{wV^2}{2gS'}},$$

$$t = t_0 e^{-\frac{wV^2}{2gS'}}, \qquad (38)$$

in which t is the thickness of the required section at the radius r, t_0 is the thickness at the center, and e is the base of Naperian or natural logarithms which is equal to 2.7183 and $\log_{10} e = 0.43429$. **All the symbols in these equations** (including $2g = 773$ inches) **are in inch units.**

If t_1 is the minimum thickness of the disk, then equation (38) can be written

$$t = t\, e^{-\frac{w(V_1^2 - V^2)}{2gS'}}, \qquad (39)$$

where V_1 is the peripheral velocity at the radius corresponding to t_1 and V is the velocity corresponding to t as before.

If the disk is not made of uniform strength throughout, then V_1 is the velocity where the portion designed for uniform strength begins.

Equations (38) and (39) are generally used by the designers of impulse turbines, and for the conditions of average practice they are sufficiently accurate.

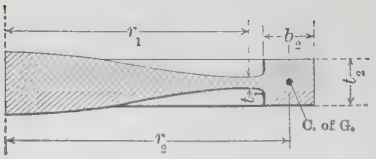

FIG. 211. Section of a Turbine Wheel.

Design of the Rim. An enlarged section or rim is usually required at the circumference of a disk for the attachment of the blades. Stresses in this section require careful consideration.

In Fig. 211, t_1 is the smallest thickness of the disk where it joins the rim (at the radius r_1) and t_2 is the thickness and b_2 the

* The change from linear to angular velocity was made to make integration simpler.

breadth of the rim of which the center of gravity is at the radius r_2.* Blades attached to the rim produce by the centrifugal force due to their weight the stress S_2 in pounds per square inch. Besides this there is exerted on the section of the rim the stress due to the centrifugal force of its own weight and also the radial stress (S_r) in the disk exerted over the thickness t_1. The expansion due to these forces acting on the rim must, for equilibrium, be equal to the expansion of the section of the disk where it joins the rim. The sum of the **radial forces F_r acting on the rim per inch of length** may be stated then as

$$F_r = S_2 t_2 + \frac{w V_2^2 b_2 t_2}{r_2 g} \dagger - S_r t_1, \qquad (40)$$

in which w is the weight of a cubic inch of the material of the rim, V_2 is the velocity at the radius r_2 **in inches** per second.

Radial expansion of the rim (λ_2) is expressed by the following form if a is the area of the rim section in square inches and E is the modulus of elasticity in pounds per square inch,‡

$$\lambda_2 = \frac{F_r r_2^2}{Ea}. \qquad (41)$$

* Because the contraction of the cross-section due to stresses at right angles (page 412), has been neglected in the derivation, equation (38) should not be used for values of **allowable** unit stress less than 15,000 pounds per square inch, as it gives thicknesses at the center, for low stresses, which are sometimes considerably too large. Practical designers who are required to use unusually low stresses for disks will find a suitable discussion in Jude's *The Theory of the Steam Turbine*, pages 188 to 204.

† Centrifugal force due to a weight of a cubic inch at r_2 is $\frac{wV_2^2}{gr_2}$, which becomes $\frac{wV_2^2 b_2 t_2}{gr_2}$ when multiplied by the area of the rim section.

‡ It is easily shown that the tensile stress in a thin cylinder is

$$S = \frac{F_r r}{a} = sE,$$

where s is the elongation per unit of length and a is the area of the section. Then the total *elongation of the circumference* (λ_t) is

$$\lambda_t = \frac{2\pi F_r r_2^2}{Ea}$$

and the *radial elongation* (λ) is

$$\lambda = \frac{\lambda_t}{2\pi} = \frac{F_r r_2^2}{Ea}.$$

Since the radial and tangential stresses in the disk have been made equal in the original assumptions, the unit elongations in every direction must be equal, so that the linear expansion in the length r is

$$\lambda_1 = \frac{1-k}{E} S_r r_1, \tag{42}$$

where k is the coefficient of the contraction of the cross-section for stresses at right angles (see page 413).

For conditions of equilibrium obviously $\lambda_2 = \lambda_1$, and substituting equation (40) in (41) and equating to (42) we have

$$\frac{r_2^2}{E b_2 t_2}\left(S_2 t_2 + \frac{w V_2 b_2 t_2}{r_2 g} - S_r t_1\right) = \frac{(1-k)}{E} S_r r_1 .$$

Usually the percentage error from writing r_1 for r_2 is very small, so that we have in simpler form,

$$\frac{r_1^2}{b_2 t_2}\left(S_2 t_2 + \frac{w V_1^2 b_2 t_2}{r_1 g} - S_r t_1\right) = (1-k) S_r r_1,$$

from which either b_2 or t_2 can be solved. In most cases, however, t_2 is determined by the blade dimensions, so that b_2 is expressed thus:

$$b_2 = \frac{S_r \frac{t_1}{t_2} - S_2}{\frac{w}{g} V_1^2 - (1-k) S_r} r_1 = \frac{S_r \frac{t_1}{t_2} - S_2}{\frac{w}{g} V_1^2 - .7\, S_r} r_1. \tag{43}$$

In this equation the stresses are in pounds per square inch, V_1 and g are in inches per second, t_1, t_2, r_1, and b_2 are in inches.

Minimum Thickness of the Disk. The thickness of large disks at the smallest section is not determined by the allowable stress but by the requirements for safe transportation and by the liability of thin disks to become distorted and unstable in balance. Disks about 5 feet in diameter should have a minimum thickness of from .4 to .6 inch, depending on the quality of the material and the

speed for which they are to be used; and for disks 10 feet in diameter the minimum thickness should be from .7 to 1.25 inches.*

The breadth of the rim (b_2) calculated by equation (43) is the maximum value allowable, but the breadth can be made, of course, less than that calculated. There will be a smaller radial force at the rim of the disk than is necessary to produce the uniform radial stress S_r, and the disk will not be one of uniform strength. The stress at the center will be reduced very much less than that at the smallest section.

If now equation (43) is used to calculate the minimum thickness t_1, with an assumed value for b_2 suitable for the design, negative values may be obtained. In this case a smaller value of S_r must be used in the calculation. Limits for S_r can be easily determined by putting $S_2 = 0$ in (43); then

$$S_r < \frac{wV_1^2}{g\,(1-k)},$$

which is the tangential stress in a freely rotating ring or is the usual "fly-wheel" formula when $k = 0$.

Practical Example. Design of the Rim of a Disk Wheel. A disk wheel 50 inches in diameter is to be designed for an impulse turbine to operate at 3000 r.p.m. The minimum thickness (t_1) is .4 inch, and nickel steel is to be used with an allowable stress of 28,000 pounds per square inch, which weighs .28 pound per cubic inch (w). Approximately the radius (r_1) at the inner edge of the rim is 25 inches, so that V is 7860 inches per second (about 450 miles per hour). The wheel is to carry two rows of blades, so that the thickness of the rim must be made about 3.5 inches. The weight of these blades is equivalent to a solid ring of steel around the rim .3 inch thick.† The weight of the

* Minimum thickness for a wheel 3 feet in diameter is about .25 inch. An approximate rule for the minimum thickness of disks is

$$t_{\min} = .008\,d \text{ to } .01\,d,$$

where d is the diameter in inches.

† Centrifugal force of the blades on a wheel is probably most simply determined by this method of calculating from a drawing showing the dimensions of the blades the thickness of a solid band or ring of the same weight.

blades per square inch of the rim surface is $.3 \times .28 = .084$ pound, and the stress S_2 per square inch due to this weight is (take $g = 386$ inches per second)

$$S_2 = \frac{.084}{386} \times \frac{(7860)^2}{25} = 538 \text{ pounds per square inch.}$$

Substituting these values in (43),

$$b_2 = \frac{28{,}000 \times \frac{.4}{3.5} - 538}{\frac{.28 \times (7860)^2}{386} - .7 \times 28{,}000} \times 25 = 1.5 \text{ inches.}$$

The thickness of the section at the center (t_0) is calculated by (38), using the same allowable stress as before for S′:

$$t = t_0 e^{\frac{-.28\,(7860)^2}{772 \times 28{,}000}},$$

$$t_0 = te^{.80} = 2.23t,$$

$$t_0 = .4 \times 2.23 = .89 \text{ inch.}$$

The expansion of the radius due to the allowable stresses in the disk can be calculated by (42), taking $E = 30{,}000{,}000$ pounds per square inch and $k = .3$,

$$\lambda_1 = \frac{1-k}{E} S_r r_1,$$

$$\lambda_1 = \frac{.7 \times 28{,}000 \times 25}{30{,}000{,}0000} = .016 \text{ inch,}$$

and the expansion of the diameter is .032 inch.

If reaction turbines are to be operated at higher peripheral speeds than 350 feet per second, the stresses due to the centrifugal forces are too large to use a free drum construction, so that the drum must be strengthened with spokes or flat disks. It is considered better practice, however, to divide a drum into short sections, and calculate each section by the method explained here for disk wheels by the use of equations (38) to (42). The Allis-Chalmers Company uses this method for the low-pressure stages of its latest designs as shown in Fig. 209, although the peripheral speed of this section of the drum is usually less than 250 feet per second.

Practical Example. Design of a Wheel Disk without a Hole. Stresses in disks are difficult because the areas over which the forces are distributed are not readily determined; besides, the forces are not uniformly distributed over any one of the areas to be considered. The stresses in a disk are calculated usually by determining the force acting on the "boundary" areas of a circular sector imagined cut out of the disk. Such a sector is shown in **Fig. 212.** The radius is **r** inches, the elementary radial thickness is *dr*, **t** is the thickness of the sector (measured parallel

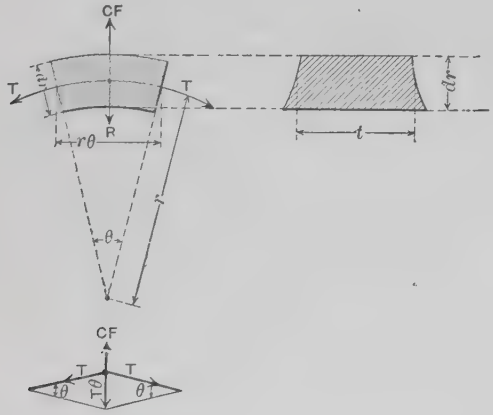

FIG. 212. Forces in a Sector of a Wheel Disk.

to the axis of the shaft), and θ is the angle subtended at the center by this sector. The centrifugal forces cause tangential and radial stresses. If we imagine the disk made up of a series of **concentric** rings, laid side by side and touching, the tangential forces tend to break the rings in the line of the tangent, and the purely radial forces, on the other hand, will tend, as it were, to **break out pieces** which would be carried away in a radial direction. In Fig. 212 the tangential and radial forces are shown more simply than in Fig. 210 in the directions to equilibrate the centrifugal force **CF.** In other words, the tangential and radial forces shown are those balancing the centrifugal forces.

An actual design of a 50-inch plain disk of forged steel **without a hole** at the center for a Riedler-Stumpf turbine is shown in **Fig. 213,** and the following paragraphs show how the calculations were made. Diameter of the disk (d_1) is 46 inches (measured inside the rim, which is 2 inches wide). Smallest section of the disk is taken as .5 inch (see page 418). Speed is 4000 revolutions per minute. The allowable unit stress is 20,000 pounds per square inch, and the disk is **designed for uniform strength.** Weight of the blades is .09 pound per inch of the circumference, producing a centrifugal force of 1840 pounds per square inch at the smallest section of the disk. Now it has been shown* that in a **flat** disk the **stress at the edge due to an external centrifugal load** (like blades and shrouds) **is superposable by simple addition to the stresses** (both radial and tangential) **in the disk due to its own rotation.**

The rim was calculated as in the previous example, and the thickness (t_2 in Fig. 211) was determined by the width required for the blades. From the inner edge of the rim the disk was given a constant thickness of .5 inch till the **tangential stress alone as calculated by equation** (33) **exceeded the allowable limit.**†

* Jude, *The Theory of the Steam Turbine*, page 198.

† It will be observed that these approximations are very much on the safe side because of the effect of "forces at right angles" (see page 412). It is probable, however, that whatever the form of the disk (if not abnormally irregular), the stresses at the center are slightly higher than the peripheral stresses. In case of undue racing due to the failure of the governing apparatus or other cause, a disk designed for *uniform strength* will fly to pieces from the center. A De Laval wheel without the usual "safety groove" near the rim when tested to destruction broke up entirely and projected large pieces through a cast-steel casing two inches thick. When, however, the customary groove was cut just inside the rim, only pieces of the rim were broken off when an excessive speed was reached, and no external damage was done.

It is stated by Jude that the metal left between the "safety grooves" of a De Laval wheel is "only sufficient to carry the traction load of the vanes." From this fact the **minimum thickness of De Laval disks can be easily calculated,** as it is generally stated that the factor of safety at the groove is 5, and the section before the groove is cut is two-fifths larger. Allowable unit stress is probably taken at about 30,000 pounds per square inch.

For some distance from the rim toward the center we have the case of a flat disk. Now in a disk of constant thickness without a hole at the center both the radial and tangential stresses increase from the rim toward the center. At the outer edge of such a disk the radial stress is only that due to the centrifugal force of the blades and rim, while the tangential stress is of considerable magnitude and is always greater than the radial stress, except at the center, where they are equal.* Because both radial and tangential stresses at every section are approximately increased 1840 pounds per square inch by the centrifugal force due to the blades, the **net allowable stress** is 18,160 pounds per square inch. The point where the "increasing" section begins is determined then by the following calculations — substituting in equation (**33**):

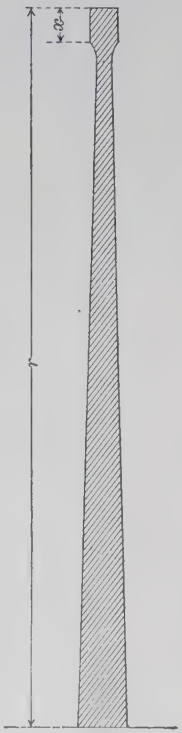

FIG. 213. Design of a Wheel Disk without a Hole at the Center.

$$d_1^2 = \frac{18{,}160 \times 139{,}100}{.28 \times (4000)^2} = 565,$$

$$d_1 = 23.8 \text{ inches, or } r_1 = 11.9 \text{ inches.}$$

Beyond this point toward the center of the disk the section has been made of **uniform strength** as calculated by equation (**38**). The calculation of the thickness where the diameter is 10 inches ($r = 5$ inches) is given by equation (**39**),

$$t = t_1 e^{\frac{.28 \times 21.2\,(10)^6}{723 \times 18{,}160}},$$

in which $t_1 = .5$ inch and $e = 2.7183$, then,

$$t = t_1 e^{.45}$$

$$t = 1.56\, t_1 = .78 \text{ inch.}$$

In the same way the thickness can be calculated for enough points to determine the profile. The section shown in **Fig. 213** is a

* Jude, *The Theory of the Steam Turbine*, page 200.

typical "flat" disk. To facilitate the forging of such disks the profile is not made exactly as calculated but is gradually tapering from the smallest section to the center. The increase in the thickness from the rim to the center is very small compared with many designs, approximating a "concavo-convex" form (Fig. 214). It is argued by some designers that the treatment of the "concavo-convex" forms is entirely wrong and that most probably it is not possible for the stresses all along the central plane to be either equal to or less than those at the rim by merely satisfying equation (38), and that the metal in the bulging part of such disks has little influence in modifying the stresses in the central plane. Some of the best authorities agree that it seems reasonable that whatever the form of the profile of a disk the "stresses

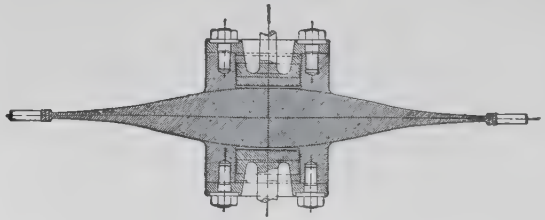

FIG. 214. Typical Solid Disk without a Hole at the Center.

in and about the central plane do not differ greatly from those in a flat disk running at the same speed."*

A typical solid disk **without a hole** for bolts or for the passage of a shaft through it is shown in **Fig. 214.** It was designed for a very much higher speed than the one in Fig. 213, so that it has a bulging from near the center. This design shows an ingenious method for the attachment of the body of the disk to the shaft. It will be observed that the disk is made with a very small section near the rim, so that the stress there far exceeds that anywhere else. If the wheel breaks it will rupture first at this smallest section and the rim and blades will be torn off. When these parts are gone the centrifugal force will be so much reduced on the part of the wheel remaining that there can be still a very

* Jude, *The Theory of the Steam Turbine*, page 204.

great increase in speed without further damage. This disk is designed for a factor of safety of about five at the smallest section, and about seven at every other section.

In designing a disk for high speeds, obviously a section that gives approximately **uniform strength** from the rim to the center is desirable. Experience in such calculations has shown that a disk of the shape shown in Fig. 211 fulfills approximately these conditions.* This disk was designed for a speed of 20,000 revolutions per minute. There is a centrifugal force of about .2 pound per inch on the outside of the rim, due to the weight of the blades which are of the irregular shape shown in Fig. 64.

Disks with Holes in the Center. Up to this point in the discussion of stresses in disks only designs similar to Figs. 213 and 214, **without a hole,** have been considered. When, however, a hole is made near the center of a disk the stresses are greatly increased. There are no very reliable methods for determining the stresses in disks of arbitrary shapes with central holes. According to De Laval, any methods for "taking into account the hub influences in the calculation are only rough approximations" to the actual conditions. It can be shown theoretically that a mere pin-hole at the center of a disk makes the tangential stress S_t at the hole twice that in a disk without a hole. Indeed a small flaw near the center of a disk may seriously affect the magnitude of the stresses. For this reason, steel ingots with any traces of "piping" must not be used for forged disks to be operated at high speeds. For thick disks of the typical De Laval shape when perforated, the exact solution is apparently indeterminate. Methods of calculation for such irregular sections have been proposed which depend on the determination of the **mean stresses** of the whole section. Results from such methods are, however, of no value at all, as it is known that the maximum stresses are often twice the calculated mean stress.

* Besides blow-holes and piping in ingots for drop forgings, most makers put holes into the disks for the attachment of tools for removing the disks from the shafts, and for balancing weights. Very few disks are made that do not have some holes.

The fact remains, however, that disks for turbines are very commonly made with holes in the center for the shaft, and other holes besides are often made for the attachment of tools for forcing the disk from the shaft when the wheel is to be removed. Stress distribution near a central hole of a nearly flat disk can be approximately calculated if a disk of comparatively smaller diameter is imagined cut from its center, and this small disk is then assumed to be of constant thickness and subjected to a radial stress at its rim equal to the **uniform stress** in the large disk if it had no hole. The stresses in this small disk with the hole can be calculated with some degree of accuracy from equation (**37**) by putting $d\mathbf{t} = 0$, since **t has been assumed constant in this small disk.*** **Tangential** stresses calculated in this way for a disk 10 inches in diameter with a hole 1 inch in diameter are shown in **Fig. 215.** **Radial** stress is, of course, zero at the center so that it is not important. The large disk (Fig. 213) was designed to make the combined unit stress in the section 20,000 pounds per square inch, and it is assumed, therefore, that the radial stress on the outside of the

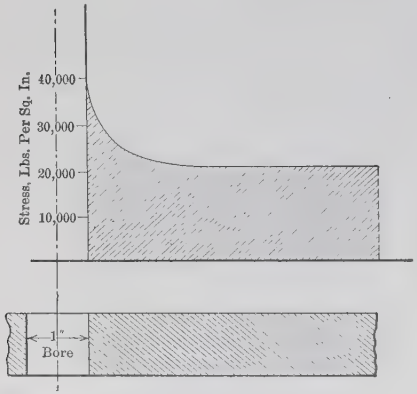

FIG. 215. Variation of Stress in a Disk caused by a Hole at the Center.

* Simplified formulas for a disk of constant thickness are given by Eyerman, *Die Dampfturbine*, pages 88–90; Stodola, *Die Dampfturbinen*, pages 160–161.

The algebraic work involved in obtaining equations suitable for calculations is laborious and complicated. Because these equations are not used directly for other calculations they are not given here. This chapter on stresses is not intended to be an exhaustive treatment, mathematically, and the practical designer wishing to use the minimum factors of safety should carefully study the graphical solutions given by Stodola; but he should remember that these methods referred to are only approximations and in a great measure are justified only because they have stood the test when applied in practice.

small disk has this value. The curve shows that the maximum stress at the hole is 40,000 pounds per square inch and that the stress is rapidly reduced as the distance from the edge of the hole increases till it reaches the constant value of 20,000 pounds per square inch, for which the wheel disk was designed. It should be observed, therefore, that the stress at the edge of a hole at the center of a disk is twice that at some distance away from the hole.* It should be carefully noted, however, that this discussion applies only to holes at the center of a disk. Holes near the rim such as are often made for balancing the disk or as a safety device so that the rim will break first in case of excessive speed, would be allowed for in practice merely by the reduction of the section.

It is, however, a good practice to make the section at the hub of a disk with a hole at the center of sufficient size to withstand the greatest stress that may come to bear at the normal speed. **Fig. 216** shows how the disk in Fig. 214 should be modified that it may be put on a 4-inch shaft. The thickness (z) of the hub will be determined in the usual way as discussed in books on machine design. Only its length (t_0) concerns this discussion. Eyerman† and Stodola give *elaborate graphic methods* for this determination, but they will not be taken up here, as they are of no general interest. For most practical purposes it is satisfactory to make use of the results shown in Fig. 215 and make the length of the boss (t_0) twice the thickness at the same section for a disk without a hole. Instead of reducing the section abruptly in proportion to the reduction in the stress the use of a fillet (see curve *ab* in Fig. 216) of very gentle curvature gives by far the best construction.‡

Because the distribution of stress is changed when a hole is made in the center of a flat disk, the section where the radial

* This has been shown by a mathematical demonstration and the development of suitable formulas by Grubler, *Zeit. Verein deutscher Ingenieure*, vol. XLI, page 860.

† W. Eyerman, *Die Dampfturbine*, pages 86–98.

‡ Stodola, *Die Dampfturbinen*, 5th edition, page 164.

stress equals the allowable limit must be calculated by a different method from that used for the disk without a hole at the center.

To determine, from the general theoretical equations for the stresses in disks, the diameter where the radial stress in a flat disk with a hole at the center has a definite value is very laborious and almost impracticable; but the following more or less empirical formula for the radial stress in a disk of **uniform thickness with a hole in the center** can be used for approximate results. It is practically the same as that given by Cree and Jude * except that it has been simplified by grouping constants and changing the units to correspond with those used in the other equations in this chapter.

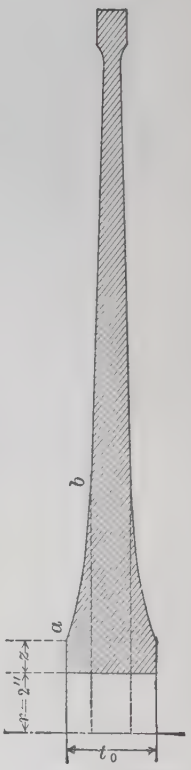

FIG. 216. Design of a Wheel Disk with a Hole at the Center.

If S_r is the radial stress in the disk in **pounds per square inch** at any diameter d_1 **inches, V** is the velocity at the periphery of the disk in **feet** per second, **D** is the diameter of the disk in **inches,** and **d** is the diameter in **inches** of a hole at the center, then

$$S_r = \frac{4\,V^2}{90\,D^2}\left(D^2 + d^2 - d_1^2 - \frac{D^2 d^2}{d_1^2}\right). \quad (44)$$

Now if this equation is to be solved to determine d_1, it can be written

$$d_1^4 + \left(\frac{90\,D^2}{4\,V^2}\,S_r - D^2 - d^2\right)d_1^2 - D^2 d^2 = 0, \quad (45)$$

and putting $B = \left(\frac{90\,D^2}{4\,V^2}\,S_r - D^2 - d^2\right)$ and

$C = D^2 d^2$, then

$$d_1 = \sqrt{-\frac{B}{2} \pm \sqrt{\frac{B^2}{4} - C}}. \quad (46)$$

* Jude, *The Theory of the Steam Turbine*, page 204.

This last equation is easily solved after obtaining the values of **B** and **C** from the dimensions of the disk and the allowable unit stress.

There are two values of d_1 because in going from the rim toward the center the radial stress increases to a maximum value and then decreases to zero at the edge of the hole. The larger value of d_1 is always taken to determine the design because between the two values of d_1 the radial stress has its maximum value.

In the design for this example for the material used $S_r = 18{,}160$ pounds per square inch, $D = 46$ inches, $d = 4$ inches, and $V = 500$ feet per second. The value of **B** is then 1358, **C** is 33,856, and d_1 is calculated to be 36.5 inches.

The section from the 36.5 inch diameter inward toward the center is made of **uniform strength** and is calculated by the use of equation (39) in the same way as in the preceding examples.

Approximate Methods for Stresses in Disks * with Hole in Center for Shaft. Mathematical determination of all the stresses requiring consideration in a disk is not possible by any method of exact analysis. For a complete determination, tangential, radial, and axial stresses must be calculated. The problem is very much simplified, however, if a portion of a disk is of practically constant thickness, as at the hub, so that the axial stress there is negligible. For the section of constant thickness only tangential and radial stresses need be considered. By the methods outlined here and the use of the charts on the following pages, the usual analytical calculations of stresses in disks are very much simplified and nine-tenths of the time usually required for such calculations is saved.

The discussion of stresses given here will be applicable to disks of the sectional shape shown in **Fig. 217** made up of straight and

* For suggestions in the preparation of this chapter, acknowledgment is due to Mr. M. Nusim of Ingersoll-Rand Company and Mr. S. H. Weaver of the General Electric Company. The mathematical demonstration is discussed in detail in an article in "General Electric Review," August, 1917, and "Proceedings of the American Society of Mechanical Engineers," 1917. The curves are reproduced from the article in the "General Electric Review."

curved lines. To regard the curved lines as arcs of circles makes the mathematical solution extremely difficult; and instead of arcs of circles, the more readily solvable hyperbolic curves will be assumed. In fact, there is very little error in assuming for the curved lines on disk sections the typical hyperbolic equation of the form $t = Cr^a$, where t is the thickness at the radius r (both in the same linear units), C is " dimension " constant, and

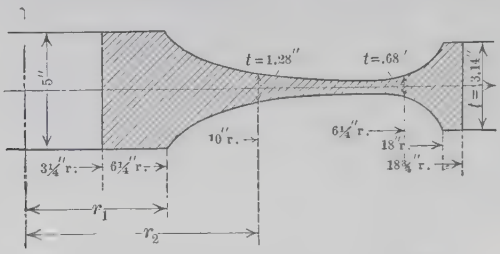

FIG. 217. Section of Typical Blade Disk.

a is another constant depending on the shape of the section at the point where the stresses are to be determined. The latter of these constants has a **negative** value when the thickness of the disk decreases with an increasing radius, has a **positive** value in parts where the thickness and radius increase together, and has a **zero value for constant thickness.**

For a given section of a disk, as for example, in **Fig. 217** (where the thickness decreases with increasing radius) the constant a has a negative value to be determined from one of the following equations in which r_2 is always to be taken for a larger radius than r_1, and t_1 is the thickness at the radius r_1 and t_2 at the radius r_2. Then we can write the following equations: *

$$a = \frac{\log_e \frac{t_2}{t_1}}{\log_e \frac{r_2}{r_1}}, \qquad (1)$$

or

$$a = -\frac{\log_e \frac{t_1}{t_2}}{\log_e \frac{r_2}{r_1}}. \qquad (2)$$

* See Stodola's " *Die Dampfturbinen*," 5th edition, pages 160–174.

The formula above is given in two forms for convenience in calculating. The first form (1) is to be used when $\frac{t_2}{t_1}$ is greater than unity, and form (2) when $\frac{t_1}{t_2}$ is greater than unity. On the other hand, when any part of a disk is of constant thickness, obviously, a equals zero.

In order to solve the equations of tangential and radial stress as given by the simplified equations in the next paragraph, it is necessary to know two values of stress at different points of the section. Ordinarily, one of these points is taken at the circumference of the bore where the axial stress is zero. The other point in the section of the disk easily determinable for stresses is at the rim where the axial stress is only that due to the centrifugal force * due to the weight of the blades or buckets attached to the rim.

The value of centrifugal force as thus calculated is not, however, a unit stress and this value must be divided by the outer cylindrical area of the rim or the circumferential area of the rim section at the point of attachment of the blades or buckets in order to obtain the unit axial stress at the rim. After the determination of the axial stress in two points as indicated, the calculation of radial stress for any other points in the cross section can be determined by equating the two following equations showing tangential stresses T_1 and T_2, respectively, at the corresponding values of the radius r_1 and r_2:

* Centrifugal force can be conveniently calculated from the formula $CF = .00001421\,WDN^2$ where CF is the centrifugal force in pounds, W is the weight of the blades or buckets attached to the rim, D is the diameter of the disk at the point of attachment of the blades or buckets, and N is the number of revolutions per minute. A simplified formula for centrifugal force is sometimes expressed in terms of its value per one thousand revolutions per minute, and in this form the above formula becomes $CF = 14.21\,WD$. The latter formula must be multiplied by the square of the number of thousand revolutions per minute to get the actual centrifugal force. Thus, if the centrifugal force per one thousand revolutions per minute has been found to be twenty thousand and the actual speed is four thousand revolutions per minute, then the centrifugal force at the actual speed would be $20{,}000 \times (4)^2$ or $20{,}000 \times 16 = 320{,}000$ pounds.

$$T_1 = Dr_2^2 - ER_1 + FR_2 \qquad (3)$$

$$T_2 = Ar^2_2 - BR_1 + Cr_2. \qquad (4)$$

The coefficients **A**, **B**, **C**, **D**, **E**, and **F** are functions only of the shape constant a and the ratio of the radiuses $\frac{r_1}{r_2}$, and when

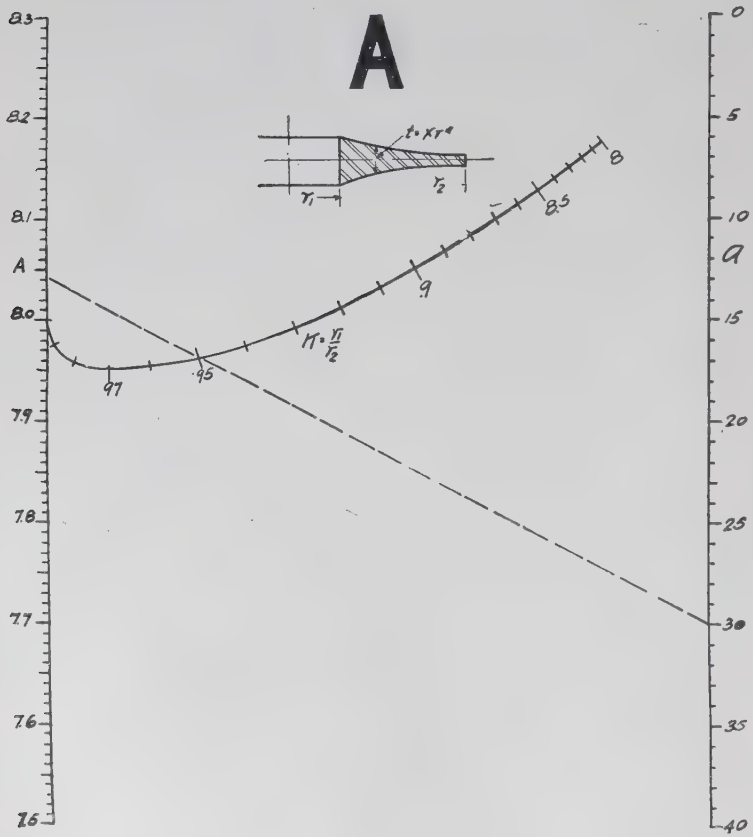

FIG. 217a.

these factors are calculated for a typical disk for particular values of a and $\frac{r_1}{r_2}$, they may be preserved in a table for future stress determinations in disks in which the same values of a and

the ratio of radiuses can be applied even if actual dimensions and speed of wheel are entirely different. It should be noted that in the use of these equations, r_1 is to be selected so that it is smaller than r_2. See **Fig. 217.**

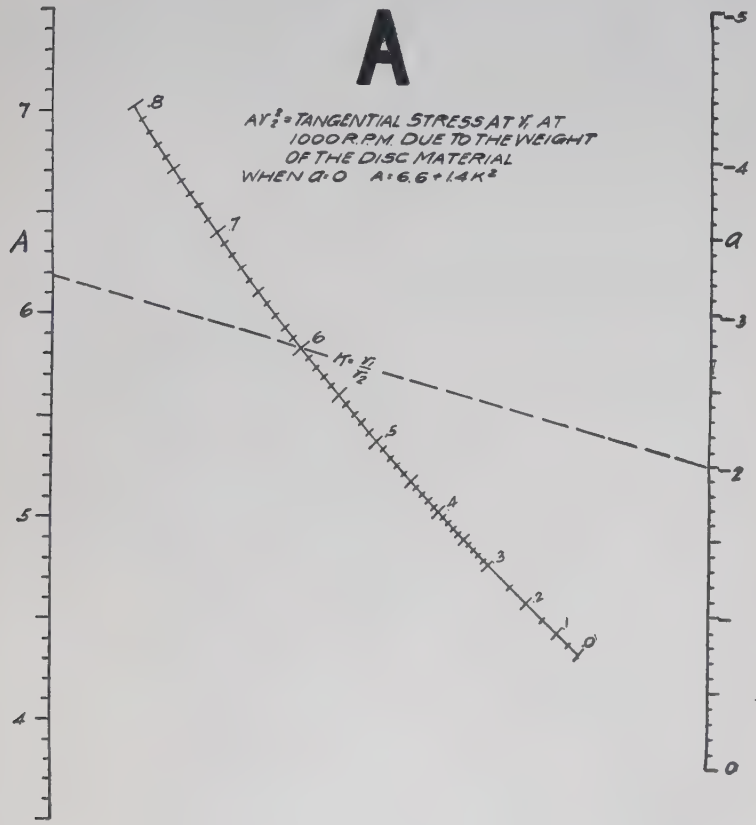

FIG. 217b.

The coefficients **A, B, C, D,** and **E** are plotted as charts (**Figs. 217a** to **217j**) as calculated with almost exact accuracy from equations simplified to apply to ratios of thickness not greater than 5, for values of the constant a between zero and -5, and for the ratio $\frac{r_1}{r_2}$ from 0.4 to 0.8; while for values of a (say

between zero and +40) and for $\frac{r_1}{r_2}$ between 0.8 and 0.97, the error will not exceed about one-half per cent. On the charts, these coefficients can be read with accuracy to three significant figures which are close enough for commercial designing. The charts giving values of the coefficients on the following pages are reproduced here through the courtesy of Mr. S. H. Weaver and the *General Electric Review*.

The values of the coefficients **A, B, C, D, E,** and **F** are relatively simple for portions of a disk in which there is constant thickness, and they can be calculated accurately and as quickly as they could be read from the charts. The following values of the coefficients should therefore be used for the case of uniform thickness without reference to the charts. This is the special case where the "shape constant" a equals zero. The weight of the material to be used is 0.28 pound per cubic inch, and the values of **A** and **D** per one thousand revolutions per minute are as follows:

$$\mathbf{A} = 6.6 + 1.4\left(\frac{r_1}{r_2}\right)^2 \text{(per 1000 r.p.m.)}$$

$$\mathbf{C} = 2 \div \left[1 - \left(\frac{r_1}{r_2}\right)^2\right]$$

$$\mathbf{B} = \mathbf{F} = \mathbf{C} - 1$$

$$\mathbf{E} = \mathbf{C} - 2$$

$$\mathbf{D} = 6.6\left(\frac{r_1}{r_2}\right)^2 + 1.4 \text{ (per 1000 r.p.m.).}$$

The application of the coefficients and formulas will now be illustrated by the determination of the tangential and radial stresses in a disc wheel of which the half section is shown in **Fig. 217.** The wheel is to operate at 3600 revolutions per minute.

The very first part of the calculation will be the determination of the values of the "shape constant" a for approximate hyperbolic curves fitting the section shown. These will be de-

termined from the values given of equations (1) and (2) at the beginning of this section. For this determination, the cross section of the wheel has been divided into five imaginary rings. The first ring will be the section included between the circumference of the hub (radius = 3.25 inches) and the point where the radius (r) is 6.25 inches; the second ring from the point where the radius is 6.25 inches to the point where it is 10 inches; the third ring from the point where the radius is 10 inches to 16.25 inches; the fourth ring from the radius of 16.25 inches to 18.00 inches; and the fifth ring from 18.00 inches to 18.75 inches. Similarly, the thicknesses will be stated for the various imaginary rings. The first ring has a constant thickness of 5.00 inches. The second ring has a variable thickness from 5.00 inches to 1.28 inches; the third from 1.28 to 0.68 inch; the fourth from 0.68 to 3.14 inches; and the fifth has a constant thickness of 3.14 inches. The ratio of the radiuses $\frac{r_1}{r_2}$ is for the first ring as calculated from the above data 0.52, for the second 0.625, for the third 0.615, for the fourth 0.903, and for the fifth 0.96. Values of the shape coefficient a for the five imaginary rings are as follows: for the first ring, 0, for the second -2.9, for the third -1.3, for the fourth $+15.00$, for the fifth 0.

The value of the radial stress at the rim of the disk wheel is calculated from the centrifugal force due to the blades or buckets attached to the circumference of the disk. In terms of centrifugal force **per 1000 revolutions per minute,** the centrifugal force is 14.21 times the weight of the blades or buckets times the diameter of the disk. In this example, the radial pull per **square inch of surface** of the circumference of the disk at the attachment of the blades or buckets has been found by the usual arithmetical calculations to be 156.1 pounds per square inch per 1000 revolutions per minute.

For the calculation of **radial stresses** in this example, the following symbols will be used to indicate the stresses at the points marked in **Fig. 217** with dimension lines:

e = radial stress at $6\frac{1}{4}$ inches radius
f = radial stress at 10 inches radius
g = radial stress at $16\frac{1}{4}$ inches radius
h = radial stress at 18 inches radius.

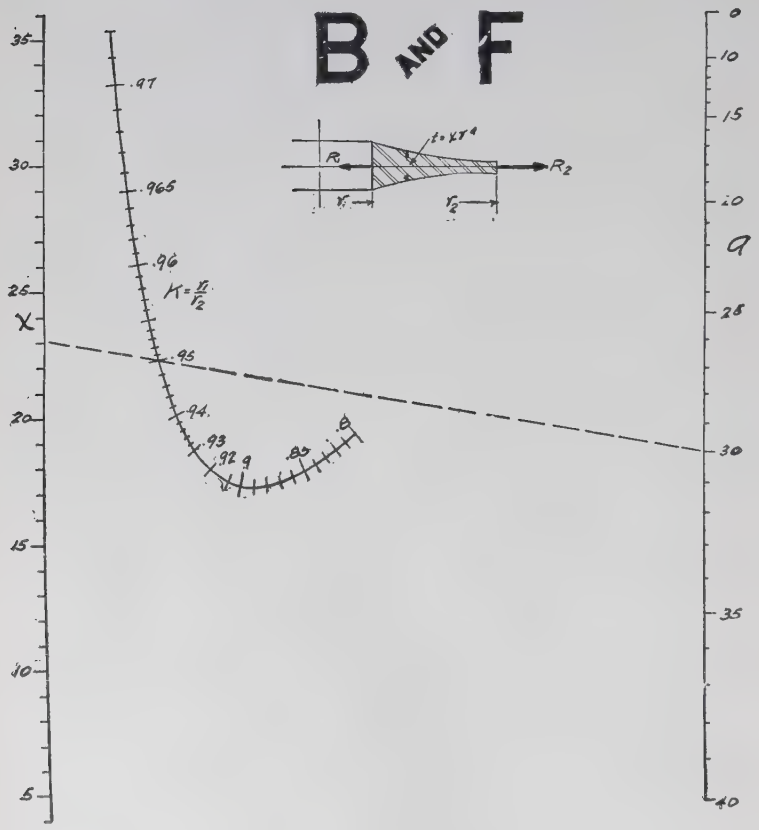

FIG. 217c.

By the notation outlined above, radial stresses are calculated at certain lines in the cross section, and at each of these lines, there will be a single value of radial and of tangential stress, and in this connection, it should be noted that the radial and tangential stress on the circumference of the imaginary ring having $6\frac{1}{4}$ inches radius will have to be the same as the inside

tangential stress of the imaginary ring having $6\frac{1}{4}$ inches radius on the inside and 10 inches radius on the outside. Radial and tangential stresses at the other intersections of the imaginary rings will be analyzed with the help of similar equalities. Thus,

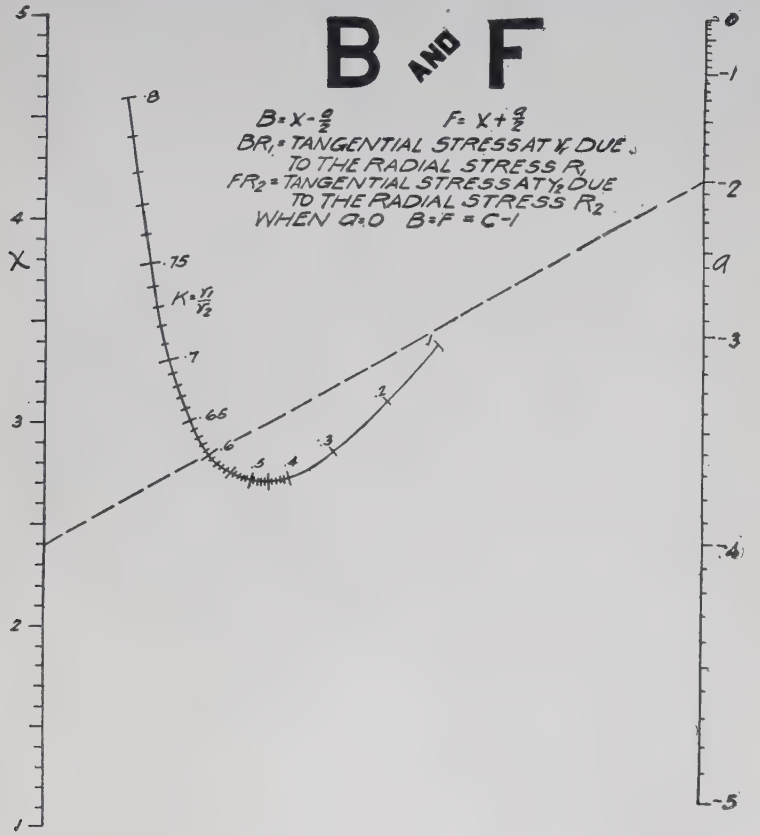

FIG. 217d.

the following equations have been written for the dimensions in this example to represent the **equality of tangential stress** at each of the dividing lines between the imaginary rings. The unknown terms in these equations are the **radial stresses** at the dividing lines of the rings as represented in the above tabulation by the symbols **e, f, g,** and **h.**

With this understanding, the following equation can be written for the equality of tangential stresses at the dividing

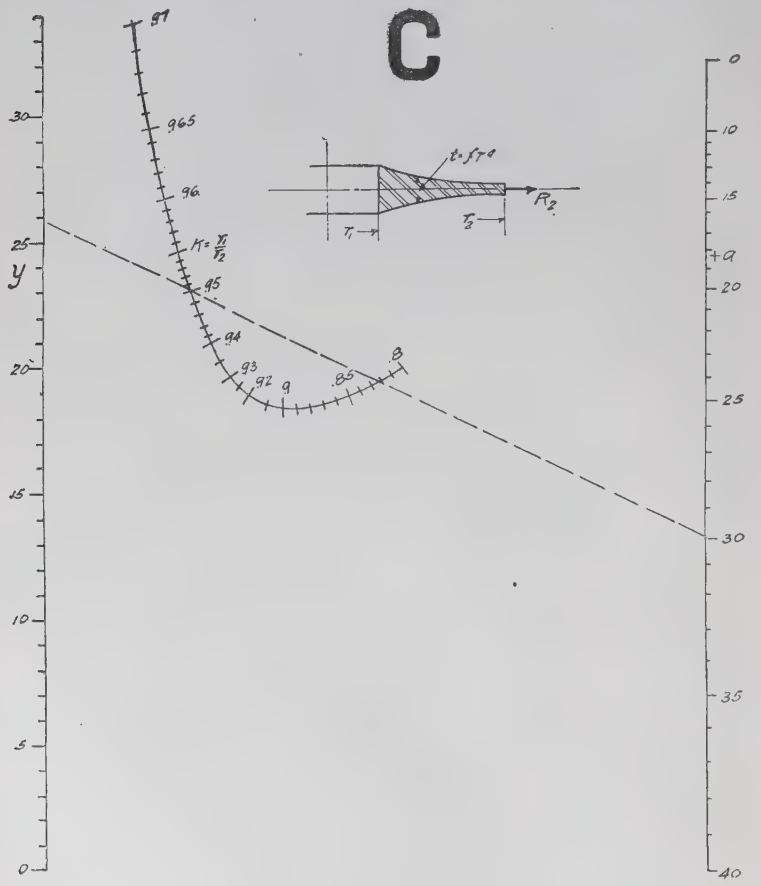

FIG. 217c.

line where the radius is $6\frac{1}{4}$ inches; (where r_2 equals 6.25. $R_1 = 0$ *) and we have:

$$T_1 = D \times (6.25)^2 - E \times 0 + F \times e, \text{ also} \quad (5)$$

$$T_2 = A \times (10)^2 - B \times e + C \times f. \quad (6)$$

* The radial stress at a section of uniform thickness is zero.

Equating T_1 and T_2, we have:

$$T_1 = D \times (6.25)^2 - E \times o + F \times e = T_2$$
$$= A \times (10)^2 - B \times e + C \times f. \quad (7)$$

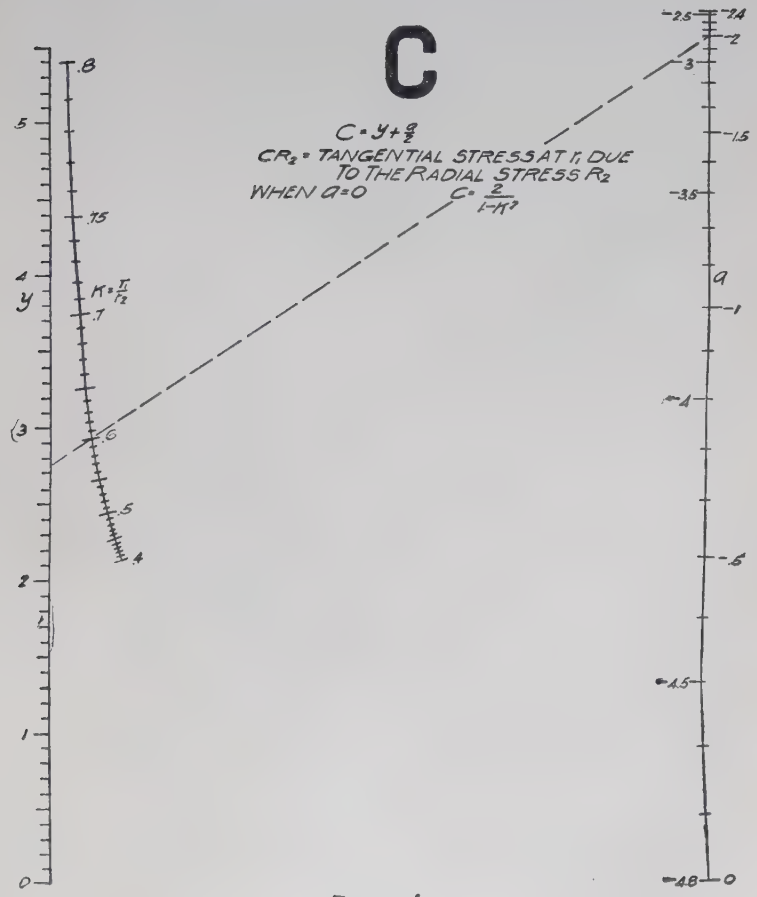

FIG. 217f.

Similarly, at the next dividing line between the imaginary rings (where the radius equals 10 inches):

$$D \times (10)^2 - E \times e + F \times f = A \times (6.25)^2 - B \times f + C \times g. \quad (8)$$

Also where the radius equals 6.25 inches:

$$D \times (6.25)^2 - E \times f + F \times g = A \times (18.0)^2 - B \times g + C \times h. \quad (9)$$

Also where the radius equals 18 inches:

$$D\times(18.0)^2-E\times g+F\times h=A\times(18.75)^2-B\times h+C\times 156.* \quad (10)$$

Values of the coefficients **A, B, C, D, E,** and **F** to be substi-

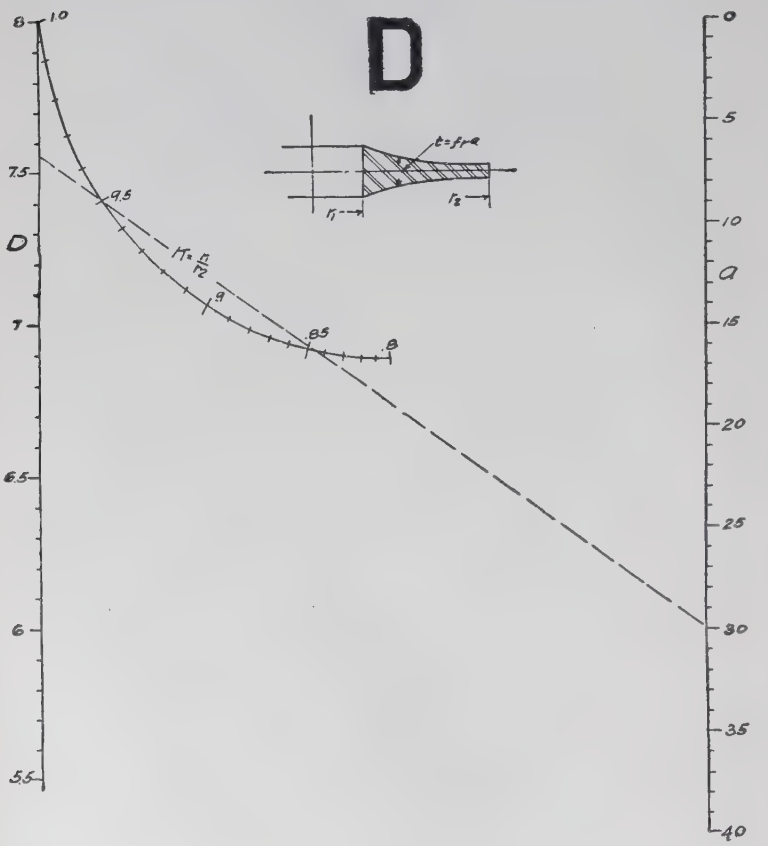

FIG. 217g.

tuted in these equations are to be determined by the use of the charts giving the respective values of the coefficients, using as

* The value of the radial stress at the circumference of the outer ring has been calculated in the preceding paragraphs from the stress due to the centrifugal force of the blades or buckets and the value is 156 pounds per square inch at 1000 revolutions per minute.

the basis for the determinations values of the shape coefficient a and the ratio of the radiuses $\frac{r_1}{r_2}$. It should be noted that the curve sheets do not give values of the coefficients **B**, **C**, **E**, and

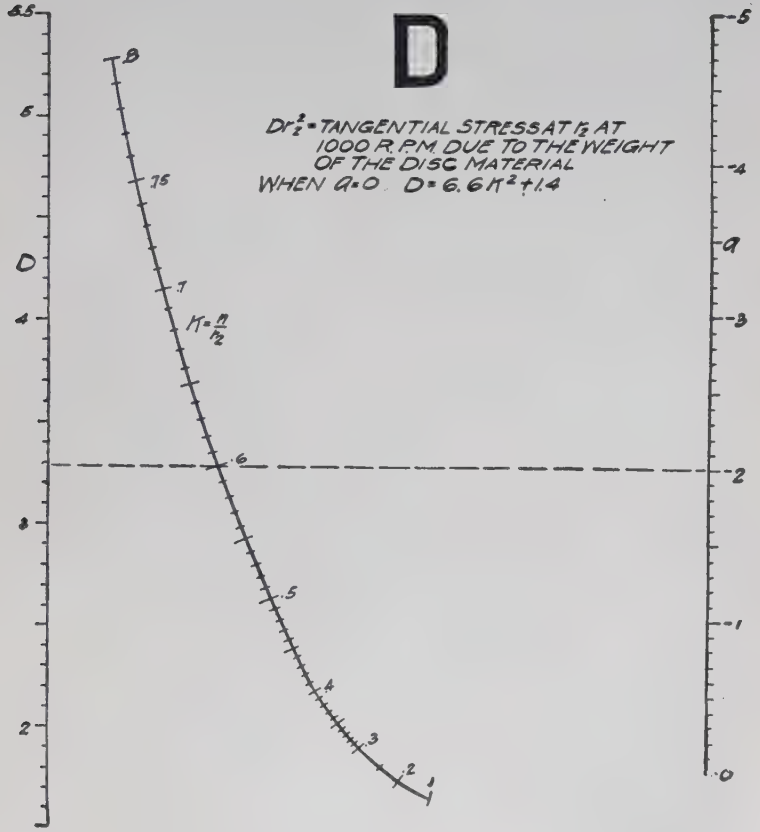

FIG. 217h.

F without further calculation. Thus, the curves for **B** and **F** are to be determined from values of **X** as read from the curves. Thus, $\mathbf{B} = \mathbf{X} - \frac{a}{2}$ and $\mathbf{F} = \mathbf{X} + \frac{a}{2}$. Similarly, curves for **C** are to be determined from values of **y** as read from the curves.

Thus, $\mathbf{C} = \mathbf{y} + \frac{a}{2}$. Also, values of **E** must be determined from the readings for **z** from the curves and $\mathbf{E} = \mathbf{z} - \frac{a}{2}$. The letter **K** is used on some of the curve sheets to represent the ratio of the radiuses $\frac{\mathbf{r}_1}{\mathbf{r}_2}$.

A statement of the necessary data taken from the dimensions given in Fig. **217** and values of radial stress (known and unknown) as well as also values of the coefficients **A, B, C, D, E,** and **F** are given in the following table:

DATA FOR STRESSES AT LINES DIVIDING THE IMAGINARY RINGS IN FIG. 217

Ring No.	1	2	3	4	5
r_1	3.25	6.25	10.00	16.25	18.00
r_2	6.25	10.00	16.25	18.00	18.75
t_1	5.00	5.00	1.28	0.68	3.14
t_2	5.00	1.28	0.68	3.14	3.14
r_1/r_2	0.52	0.625	0.615	0.903	0.96
a	0.00	2.9	−1.3	15.00	0.00
R_1	0.00	e	f	g	h
R_2	e	f	g	h	156
A	6.98	5.99	6.58	8.09	7.89
B	1.74	4.17	2.99	4.03	24.51
C	2.74	1.49	2.25	21.33	25.51
D	3.18	3.33	3.59	7.09	7.48
E	0.74	2.31	1.62	3.75	23.51
$F = B + A$	1.74	1.27	1.69	19.03	24.51

After substituting values of the coefficients **A, B, C, D, E,** and **F** in equations (**7**) to (**10**) already given, we obtain the following:

For $\mathbf{r} = 6.25$ ins.

$$3.18 \times (6.25)^2 - 0.74 \times 0 + 1.74 \times e = 5.99 \times (10)^2 - 4.17 \times e + 1.49 \times f. \qquad (11)$$

For $\mathbf{r} = 10$ ins.

$$3.33 \times (10)^2 - 2.31 \times e + 1.27 \times f = 6.58 \times (16.25)^2 - 2.99 \times f + 2.25 \times g \qquad (12)$$

For $\mathbf{r} = 16.25$ ins.

$$3.59 \times (16.25)^2 - 1.62 \times f + 1.69 \times g = 8.09 \times (18)^2 - 4.03 \times g + 21.33 \times h \qquad (13)$$

For $\mathbf{r} = 18$ ins.

$$7.09 \times (18)^2 - 3.75 \times g + 19.03 \times h = 7.89 \times (18.75)^2 - 24.51 \times h + 25.51 \times 156. \qquad (14)$$

The solution of these equations by the usual method of simultaneous equations gives the following values for the unknown **radial** stresses in the table: $e = 433$; $f = 1398$; $g = 1578$; $h = 238$.

After the values of the **radial** stresses **e, f, g,** and **h** have been determined, the **tangential** stress at any of the dividing lines of the imaginary ring sections can be determined since either the right hand or the left hand member of equation (11), for example, gives the value of tangential stress at the point where the radius is $6\frac{1}{4}$ inches. Similarly, either the right hand or the left hand member of the second equation gives the value of the tangential stress where the radius equals 10 inches, and so on. Following this method, the tangential stress at the outside edge of the hub will be determined most simply from the left hand member of the first equation. Thus,

$$3.18 \times (6.25)^2 - 0.74 \times 0 + 1.74 \times 433 = 877.$$

By the solution similarly of the $\mathbf{T}_2$ equation (6) written for the radius at the inside of the hub ($\mathbf{r} = 3.25$ inches), the tangential stress at this point will be:

$$6.98 \times (6.25)^2 - 1.74 \times 0 + 2.74 \times 433 = 1458.$$

Also, the tangential stress at the outer rim as calculated by substitution in equation (14) will be:

$$7.48 \times (18.75)^2 - 23.51 \times 238 + 24.51 \times 156 = 853.$$

From the results calculated in this way, the following tabulation can be made for the radial stresses (**R**) and the tangential stresses (**T**) at the various sections **per 1000 revolutions per minute**:

r =	3.25	6.25	10	16.25	18	18.75	(inches)
R =	0	433(e)	1398(f)	1578(g)	238(h)	156	(lbs. per sq. in.)
T =	1458	877	1109	1345	915	853	(lbs. per sq. in.)

If intermediate values were required between those given, additional equations would have to be worked out in the same way as those already given.

The rated speed at which the turbine wheel is to operate is 3600 revolutions per minute, and to get the equivalent radial and tangential stresses at this speed from the preceding table, all the values given must be multiplied by $(3600/1000)^2 = 12.96$ and we obtain the following table:

r =	3.25	6.25	10	16.25	18	18.75	(inches)
R =	0	5608	18115	20450	3189	2020	(lbs. per sq. in.)
T =	18900	11386	14368	17430	11858	11052	(lbs. per sq. in.)

The radial elongation at any radius r is $\epsilon = r(T - 0.3\,R) \div 29{,}000{,}000$, where 29,000,000 is the modulus of elasticity of the disk material. The radial elongation at 360 r.p.m. is then for

r =	3.25	6.25	10	16.25	18	18.75	(inches)
ϵ =	0.00212	0.00208	0.00308	0.00633	0.00677	0.00676	(inch)

The time required for an accurate solution, using the exact mathematical formulas, is about forty-five hours; the use of the approximate formula in the chart form reduces the time to about five hours. As to the error in the approximation, a comparison has been made of several disks in which the maximum stress varied from one per cent. low to three per cent. high.

In a tapering section, values of the shape constant a are **negative** for a section reducing in width as the radius is increased, zero for a constant thickness, and positive values when the width of the section increases with increasing distance from the center. With a given thickness inside the rim, the numerical negative values of a will be larger for a thick than for a thin hub. An examination of the charts shows that values of A (for constant values of r) are reduced with increasing negative

values of a, meaning that the thickness of the hub is increasing toward the center. Similarly, the charts of values of **B** and **F** have increasing values under the same conditions while values of **D** and **E** are reduced. Values of **C** may be increased or de-

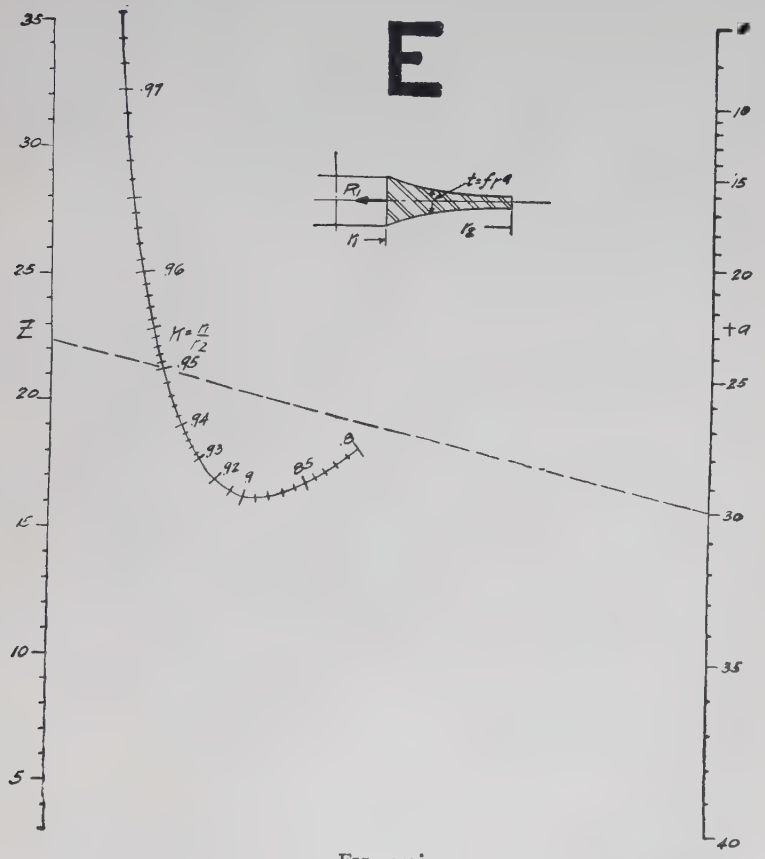

FIG. 217i.

creased depending on whether the constant a is greater or less than -2.4; when a is greater, **C** is increased and also when less, **C** is increased. In other words, the minimum values of **C** occur when a is equal to -2.4, but the range of values in **C** is not great.

Reference to the first of the equations written for expressing

the equalities of the tangential stresses (for $\mathbf{r} = 6.25$ inches) shows that increasing negative values of the constant a (for a thicker hub) reduces the value of the radial stress **e** rapidly,

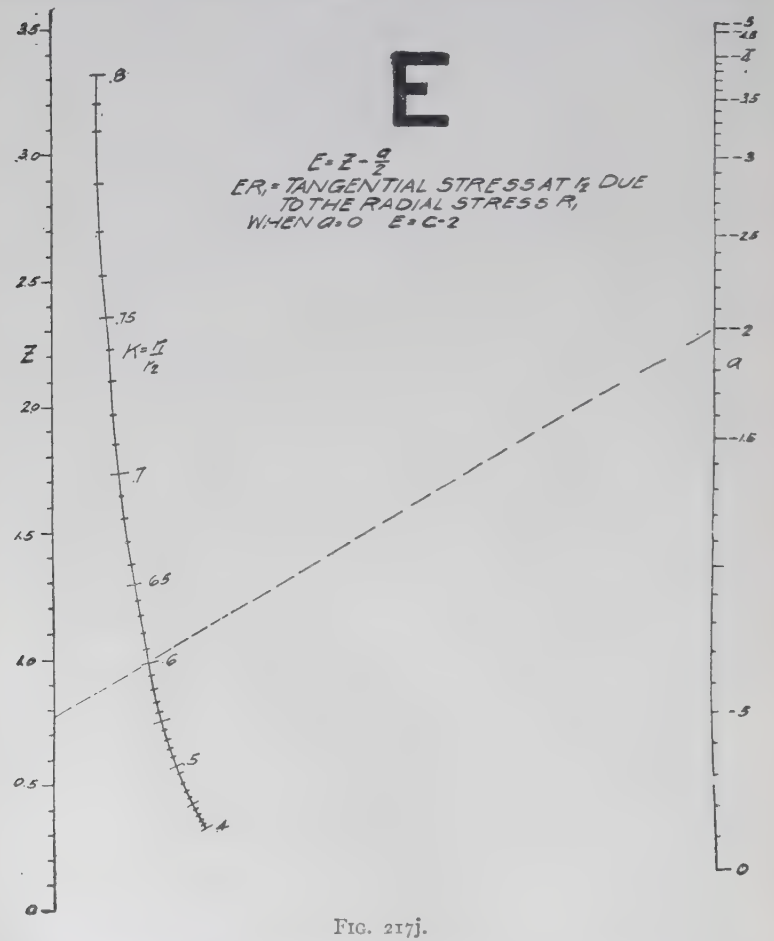

Fig. 217j.

and consequently reduces also the tangential stress at the hub as calculated by the equation given above for that tangential stress. This equation depends only on the value of **e** as regards thickness. The change in the value of **f** is insignificant and can be neglected for approximate calculations.

STRESSES IN REVOLVING DRUMS

As appears from an inspection of the various photographs given in the text illustrating modern designs, a **drum** is generally made up of a number of sections. The end sections are generally integral with the shaft. These end sections are generally designed as disks of uniform stress. The intermediate blading is generally carried on a **ring** bolted to these ends; and the design of rings has been explained on preceding pages.

Permissible Stresses and Suitable Materials. It is considered safe generally to use ordinary forged or rolled steel, for velocities not exceeding 600 feet per second; and for lower speeds than this limit wrought iron can even be used if it is of exceptionally good quality.

Nickel steel is recommended for turbine disks by the Krupp Company of Essen, Germany. This nickel steel has an ultimate tensile strength of 125,000 pounds per square inch and 12 per cent. elongation before rupture. The elastic limit is about 95,000 pounds per square inch. It is stated by the Krupp Company that they will produce a nickel steel of still higher tensile strength but only about 6 per cent. elongation. With some small forged pieces of this material an ultimate tensile strength of 285,000 pounds per square inch has been observed, with an elastic limit of nearly 225,000 pounds per square inch. All De Laval turbine wheels used in America are made in Sweden of forged nickel steel, which is rather high in carbon.

Allowable working stresses must, of course, be left to the judgment of the designers. An engineer of the Krupp Company states that stresses **in the same direction** may be allowed in turbine disks as high as one-third of the elastic limit.

Since the centrifugal force and therefore also the unit stress is proportional to the square of the velocity, if a factor of safety of 4 is allowed, the breaking speed of the wheel will be twice the normal speed, and the elastic limit of the material is only about 1.5 times the normal speed.

Excessive stresses at a hole are " dissipated " very materially if a dangerous stress is reached at the edge of the hole. Before rupture can occur there will be an excessive elongation of the material as soon as the elastic limit is reached at the highly stressed section.

CRITICAL SPEEDS OF LOADED SHAFTS

With the high speeds at which steam turbines are operated the centrifugal forces due to even a small eccentricity of the rotating masses produce vibrations, excessive stresses, and " springing " of shafts. As the result of the eccentric forces the shaft is bent farther out of line, so that the centrifugal forces and the amount of the eccentricity are increased until the stress set up in the shaft by the bending produces a force equal to the centrifugal force, and the center of gravity and " center of work " coincide. If W is the weight of the rotating mass in pounds, e is the " original " eccentricity of the shaft in inches, x is the eccentricity in inches at N revolutions per minute, P is the force applied to the shaft at the point of attachment of the disk which will bend the shaft 1 inch, within the elastic limit, C. F. is the centrifugal force of the rotating mass, and k is a constant, then

$$\text{C. F.} = \frac{kWN^2}{gx}$$

The bending of the shaft at this speed is $x - e$, so that

$$(x - e)\,P = \frac{kWN^2}{gx} \tag{47}$$

and

$$x = \frac{e}{1 - \dfrac{kWu^2}{Pg}}, \text{ where } u = \frac{N}{x}.$$

The increased eccentricity due to rotation is therefore proportional to the original eccentricity of the shaft and increases with increasing values of u and hence also of N. When $\dfrac{kWu^2}{Pg} = 1$ x becomes ∞, that is, the deflection becomes exceedingly large, unless prevented, and would break the shaft.

It has been shown by Cree * that the critical speed N_c (r.p.m.) of a shaft with some flexibility in the bearings carrying a concentrated load of **W** pounds is

$$N_c = \frac{6.94r^2}{ab}\sqrt{\frac{EI}{W}}, \tag{48}$$

where **E** is the modulus of elasticity in pounds per square inch, **r** is the radius of the shaft in inches, **l** is its length (between two bearings) in feet, and **a** and **b** are the distances from the load to the bearings, in feet. This formula † is to be used for only a single concentrated load like the single wheel of a De Laval turbine. When there are a number of wheels with possibly also a revolving field of a generator on the same shaft, the problem becomes very complicated if the loads are considered separately. Experience with such calculations has shown that for the cases occurring in practice‡ the critical speed can be determined with considerable accuracy by the following simple equation derived for the case of **uniform** loading:

$$N_c = 155{,}000\, r^2\sqrt{\frac{1}{Wl^3}}, \tag{49}$$

where **W** is the sum of the several loads on the shaft.

Accurate Determination with Multiple Loading. In all except the simplest type of turbines there is more than one concentrated load on the shaft. For accurate determinations it is necessary to take the weight of the shaft itself into consideration. A solution of a problem involving a shaft with multiple loading will now be considered.

In order to determine the critical speed of the rotor it is necessary to determine the elastic curve of the rotor. This is most easily done by graphical methods. A discussion of these methods may be found in any work on graphical statics.

* *Proc. Physical Society* (London), vol. XIX.

† In this formula the weight of the shaft is not taken into account. The influence of the weight of the shaft on the critical speed can be easily calculated, but in practical cases it may be neglected without appreciable error.

‡ This applies particularly to the cases of Rateau, Parsons, and Curtis turbines and turbine-driven generators and pumps.

Problem. Draw the curve of statical deflection for the three-stage rotor of the turbine shown in Fig. 218. For dimensions consult Fig. 219 and the accompanying table. Also determine the approximate critical speed. The shaft may be considered as simply supported at the centers of the bearings.

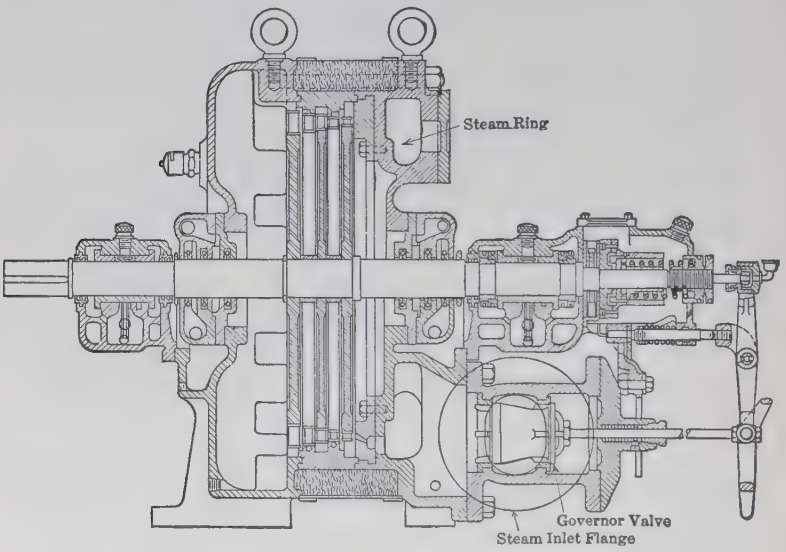

FIG. 218. Three-stage Kerr Steam Turbine.

The work may be divided into six parts, *viz.*:

I. Determination of the loads.
II. Construction of force polygon (*b*).
III. Construction of string polygon (*c*).
IV. Determination of the imaginary loads for force polygon (*d*).
V. Construction of force polygon (*d*).
VI. Construction of string polygon (*e*) and actual elastic curve (*f*).

I. Determination of the Loads. The length of the shaft is divided up into a number of parts. Each section should embrace only one diameter of shaft. The greater the number of divisions the greater will be the accuracy of the elastic curve but a greater number than taken for the solution of this problem is not neces-

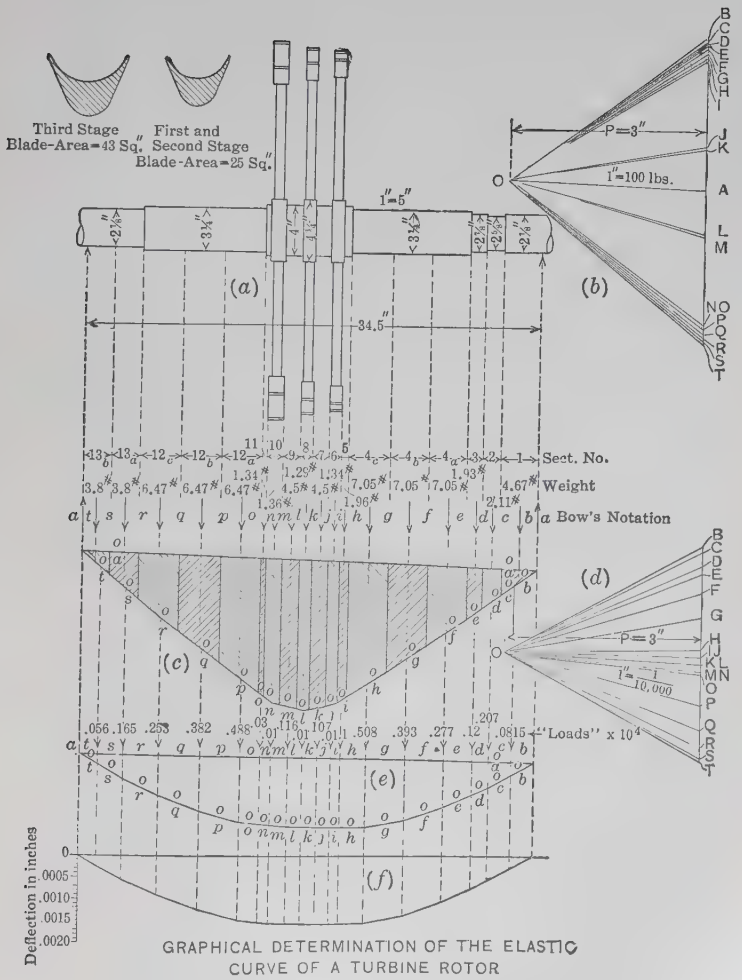

FIG. 219. Dimensions and Stress Diagrams of Three-stage Turbine.

TABLE 2

TABLE OF CALCULATIONS FOR CRITICAL SPEED OF TURBINE ROTOR

1	2	3	4	5	6	7	8	9	10	11	12	13
Sect. No.	Diam. Inches	Length Inches	Vol. Cu. In.	Area Sq. In.	Weight Lb.	Area M. Diag. Sq. In.	I in.^{4}	"Load" $\times 10+^4$	Defl. In.	Wy^2	Wy	Name of Part
1	2.875	2.540	16.45	6.49	4.67	.1088	3.34	.0815	.00023	.0000002468	.001074	Shaft
2	2.625	1.375	7.45	5.42	2.11	.1920	2.32	.2070	.00059	.0000007340	.001244	"
3	2.875	1.050	6.81	6.49	1.93	.1610	3.34	.1200	.00078	.0000010680	.001508	"
4a	3.250	3.000	24.87	8.29	7.05	.6060	5.46	.2770	.00104	.0000076300	.007340	"
4b	3.250	3.000	24.87	8.29	7.05	.8580	5.46	.3930	.00137	.0000132400	.009660	"
4c	3.250	3.000	24.87	8.29	7.05	1.1100	5.46	.5080	.00156	.0000171500	.011000	"
5	3.750	.625	6.91	11.05	1.96	.2815	6.90	.1000	.00158	.0000055300	.003500	"
	4.750	1.090	19.30	17.72	5.47							Hub + Shaft
	+23.625	.750	315.21	420.28	89.40							Disc
	− 4.75											
6	+26.375	.937	101.30	107.70	28.70	.3960	99.00*	.0133	.00159	.0003390000	.213200	Rim
	−23.625											
	+27.625	.937	10.13	10.81*	2.87							Shroud Ring
	−27.375											
					7.70							Blades (119 at .0648 lb.)
7	4.000	1.250	15.79	12.53	4.50	.5370	12.57	.1070	.00159	.0000113800	.007150	Shaft
	4.750	1.090	19.30	17.72	5.47							Hub + Shaft
	+23.062	.750	299.85	399.80	85.00							Disc
	− 4.75											
8	+25.812	.937	100.00	106.20	28.35	.4200	99.00*	.0141	.00158	.0003225000	.204000	Rim
	−23.062											
	+27.937	.937	10.34	11.03	2.93							Shroud Ring
	−27.687											
					7.46							Blades (90 at .083 lb.)
9	4.000	1.250	15.79	12.58	4.50	.5800	12.57	.1160	.00156	.0000109400	.007020	Shaft
	4.750	1.287	22.75	17.72	6.46							Hub + Shaft
	+22.375	.750	281.09	374.78	79.60							Disc
	− 4.750											
10	+25.125	1.187	121.40	102.00	34.40	.5150	99.00*	.0173	.00154	.0003230000	.209500	Rim
	−22.375											
	+28.875	1.187	13.42	11.30	3.81							Shroud Ring
	−28.625											
					12.03							Blades (80 at .15 lb.)
11	4.000	.375	4.74	12.58	1.34	.1450	12.57	.0300	.00152	.0000030930	.002035	Shaft
12a	3.250	2.750	22.80	8.29	6.47	1.1040	5.46	.4880	.00147	.0000139700	.009500	"
12b	3.250	2.750	22.80	8.29	6.47	.8330	5.46	.3820	.00125	.0000101100	.008090	"
12c	3.250	2.750	22.80	8.29	6.47	.5520	5.46	.2530	.00090	.0000052400	.005820	"
13a	2.875	2.065	1.34	6.49	3.80	.2195	3.34	.1650	.00051	.0000009900	.001940	"
13b	2.875	2.065	1.34	6.49	3.80	.0748	3.34	.0560	.00019	.0000001370	.000722	"
										.0010859588	.704303	

* Computed on basis of 6.7 in. diameter, Critical speed $= \frac{60}{2\pi}\sqrt{\frac{32.2 \times 12 \times .704303}{.0010859588}} = 4770$ R.p.m.

sary or practicable. These sections are numbered in Fig. 219 from 1 to 13*b*.

The weight of each section is determined by finding the volume of the section and multiplying by .2835 (the density of steel in pounds per cubic inch). The weight of each section acts through the center of gravity of the section. The weights acting at the center of gravity of each section are shown under the sketch of the rotor in Fig. 219. The reactions at the bearings are also indicated by forces. Bow's notation is then applied to these forces as shown in the figure.

II. Construction of Force Polygon (*b*). The loads are laid off on the same vertical line as shown in (*b*). A convenient point is chosen for pole *O*. In the solution, the pole distance *P* is 3 inches. Rays are drawn to *B*, *C*, *D*, *E*, etc., from pole *O*.

III. Construction of String Polygon (*c*). The string polygon is constructed by drawing on the lines of action of the forces of (*a*), lines parallel to the rays of (*b*). Rays *ob* and *oc* must intersect on the line of action of the force *bc*; rays *oc* and *od* must intersect on the line of action of force *cd*, etc. Ray *oa* is determined after all the other lines have been drawn on the string polygon. Ray *oa* and ray *ob* must intersect on force *ab* of (*c*). In like manner rays *oa* and *ot* must intersect on force *at*. Therefore the point of intersection of *ot* and *at* is a point on *oa* and the intersection of *ob* and *ab* is another. Since two points on *oa* are now determined, the line can be drawn.

The string polygon represents the bending moment of the rotor at any point. The scale of the bending moment diagram is determined as follows:

Let the length scale be 1 inch = *L* inches (full size).

Let the force scale be 1 inch = *F* pounds.

Let the pole distance chosen be *P* inches.

Then 1 inch = *LFP* inch-pounds, the bending moment scale.

In the solution illustrated

L = 5 inches (on rotor).

F = 100 pounds.

P = 3 inches (on diagram).

Therefore the moment scale is 1 inch $= 5 \times 100 \times 3 = 1500$ inch-pounds.

The bending moment at any point of the rotor is determined, therefore, by measuring the vertical distance across the string polygon at the point in question, and multiplying by 1500 inch-pounds.

IV and *V. Determination of Imaginary Loads for Force Polygon* (*d*). The area of the moment diagram for each section of the rotor is found and divided by EI of the section to obtain the "Loads" shown directly under the bending moment diagram. These loads are laid off on (*d*) as was done in the construction of (*b*). A suitable pole point is chosen and the various rays are drawn.

The load scale for (*d*) must now be determined. Let the

Bending moment scale be 1 inch $= M$ inch-pounds
Length scale be 1 inch $= L$ inch

then

1 inch^2 of Bending Moment diagram $= ML$ inch^2-pounds, therefore each square inch of B.M. diagram gives

$$\frac{ML \text{ inch}^2\text{-pounds}}{E \text{ pounds per inch}^2 \; I \text{ inch}^4}$$

load for the polygon (*d*). The expression $\frac{ML}{EI}$ is dimensionless so that the loads of (*d*) are pure numbers.

In this particular problem

$M = 1500$ inch-pounds. $E = 30{,}000{,}000$ pounds per inch^2.

Therefore 1 inch^2 of B.M. diagram gives

$$\frac{1500 \times 5}{30{,}000{,}000 \; I} = \frac{.00025}{I} \text{ units of load.}$$

The value of I, of course, varies with different sections.

VI. Construction of String Polygon (*e*). Each of the forces of polygon (*d*) acts through the center of gravity of its respective

area. The string polygon (*e*) is constructed on the lines of action of these forces in exactly the same way that string polygon (*e*) was constructed. String polygon (*f*) is constructed by making the string *oa* horizontal and by making the intercepts cut off on vertical lines equal respectively to the vertical intercepts of polygon (*e*). String polygon (*f*) represents the true shape of the elastic curve.

The scale of deflections must now be determined.

Let 1 inch = R units of load in (*d*) (R is dimensionless).
1 inch = L inch of length on the rotor.
Polar distance = P inch.

Then deflection scale is 1 inch = RLP inches of deflection.
In this particular problem

$$1 \text{ inch} = \frac{1}{10{,}000} \text{ units of load.}$$
$$1 \text{ inch} = 5 \text{ inch on rotor}$$
$$P = 3 \text{ inches.}$$

$$\text{Therefore } 1 \text{ inch} = \frac{3 \times 5}{10{,}000} \text{ inch} = .0015 \text{ inch of deflection}$$

A convenient form for listing the various calculations is shown in the accompanying table. The deflection under each load W of the original diagram (*a*) is scaled off the deflection curve and listed in the table. The product of each weight times its deflection (y) and the product of each weight times the square of its deflection are also listed.

The critical speed is then determined by substituting in the expression

$$\text{Critical R.P.M.} = \frac{60}{2\pi}\sqrt{\frac{32.2 \times 12 \times \text{summation of } Wy}{\text{summation of } Wy^2}},$$

where y is the deflection at any point in the shaft to a load W. The kinetic energy of the eccentric rotating mass and the elastic

energy of the whole shaft as required for the derivation of this formula are found by usual mathematical methods.

In this particular problem the critical speed is 4770 R.P.M. which is well above the operating speed of the turbine.

This solution may be applied to all rotors supported on two bearings and, with slight modifications, to the three bearing case.

CHAPTER XVI

MERCURY TURBINES

Mercury boils at a much higher temperature than water and consequently much more heat can be stored in mercury vapor than in steam. Because of this thermal advantage, turbine installations have been devised to operate with mercury vapor, although usually in combination with steam to drive another turbine. Both the mercury turbine and the steam turbine are generally used to drive generators. The application of this system in a typical installation, is shown in Figs. 220, 221 and 222. The development of this system is largely due to the efforts of Mr. W. L. R. Emmet, Consulting Engineer of the General Electric Company. The mercury is vaporized in an oil-fired boiler in which the mercury circulates in the tubes. The mercury vapor from the boiler passes through suitable piping to the mercury turbine as shown diagrammatically in Fig. 220. This turbine exhausts into a surface condenser where its latent heat is used to make steam. Mercury which liquifies in the condenser is carried back to the mercury boiler by gravity (no feed pump is required). The characteristics of mercury are such that high temperatures can be used without excessive pressure, and the heat from condensation can be delivered at a convenient degree of vacuum and at a temperature suited to make steam at pressures suitable for power plant uses. The system thus affords means by which the temperature ranges practical with steam are greatly increased with consequent gain in the conversion of heat into work.

From time to time various substances have been suggested for use in a thermal system similar to the one described, but the only substance which seems to have any practical possibilities is mercury, in spite of its high cost, poisonous quality and tendency to oxidize.

The power plant installation consisting of a mercury boiler and a mercury turbine has been recently added to one of the plants of the Hartford Electric Light Company at Hartford, Connecticut. This equipment was designed to operate at 35 pounds per square inch gage pressure on the mercury boiler and the vapor from this boiler drives an 1800 kilowatt mercury

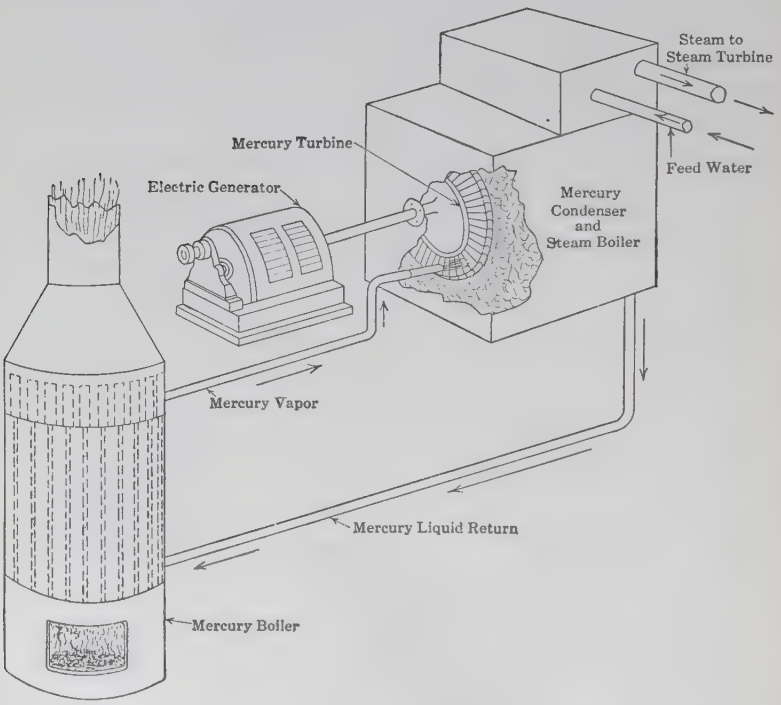

FIG. 220. Diagrammatic Drawing of Mercury and Steam Turbine.

turbine. The mercury vapor exhaust when condensed generates steam in the condenser at 200 pounds per square inch gage pressure with about 100 degrees Fahrenheit superheat.

In this installation, the hot furnace gases from oil burners pass in order through the mercury boiler, a mercury-liquid heater, a steam superheater and a feed-water heater, as shown in Fig. 221. The designers state that a heater to warm the air required

for combustion might well be substituted for the feed-water heater in this outfit as it would put the additional amount of heat into the mercury vapor instead of into the steam, and feed-water heating could be accomplished by " bleeding " steam from one of the stages of the steam turbine. The approximate temperatures of the gases at different points in this path are given in this figure.

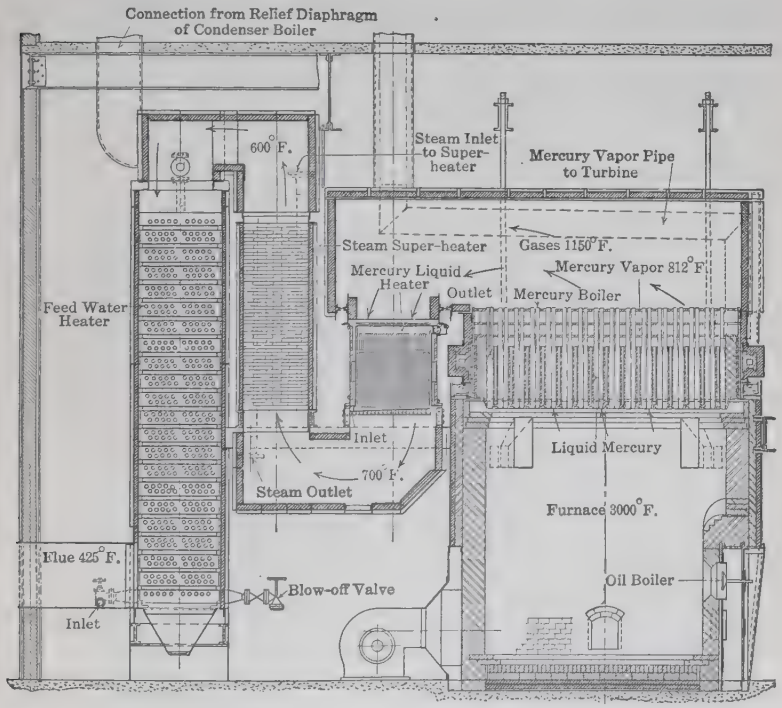

FIG. 221. Section through Mercury Boiler, Heater, Superheater, and Feedwater Heater.

The mercury vapor generated in the boiler passes through governing and emergency valves to the mercury turbine wheel, which is overhung on the end of the generator shaft and operates in a suitable space at one end of the mercury condenser as shown in Fig. 220. Two safety valves are arranged to by-pass

the mercury vapor into the mercury condenser when either of these valves closes. By this arrangement, mercury vapor continues to be condensed and to make steam for the operation of the steam turbine, whether the mercury vapor is passing through the mercury turbine or not. The turbine shaft passes through a packing box between the generator and the turbine wheel, which is sealed by mercury vapor which is above atmospheric pressure. The outward leakage from this packing box discharges into a cooling chamber where it is all condensed and returned to the system. The mercury vapor after passing through the nozzles of the turbine and passing through the blades

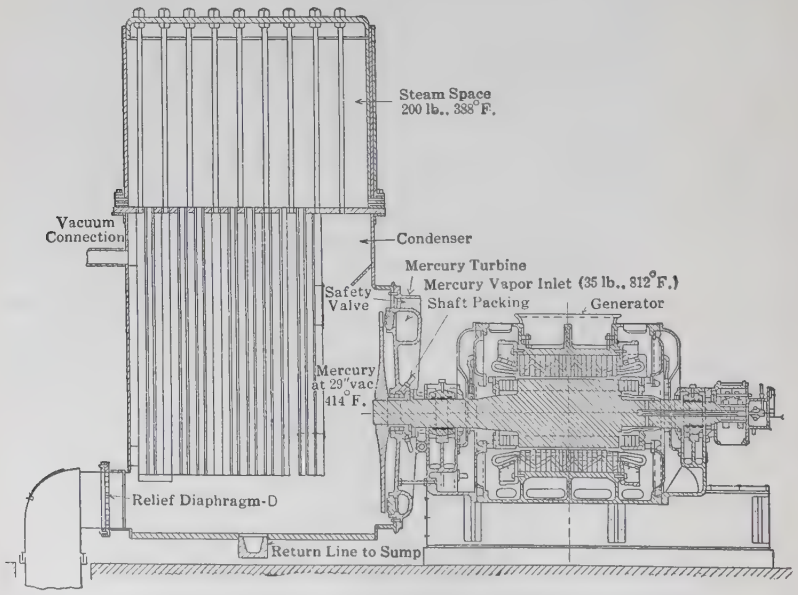

FIG. 222. Section through Mercury Condenser, Turbine, and Generator.

of the turbine wheel comes into contact with the tubes of the condenser which hang down vertically from a steam and water drum *D* to which they are attached by rolling and by arc welding. Usually the condenser and all pipes and tubes which carry mercury are put together by welding. From this condenser the

liquified mercury runs through a sump to the mercury heater shown in the middle of Fig. 221, and then returns to the mercury boiler by gravity. As shown in Fig. 222 there is a large blow-out diaphragm *D* which opens into a pipe discharging into the chimney in case the pressure in the mercury condenser should for any reason become excessive.

In the most recent design of the mercury boiler, the fire-tubes through which the hot furnace gases pass are hexagonal and are nested together like a honeycomb, as shown in Fig. 223, and in each seven tubes a space is left for a duct which serves as the return for the circulating liquid. The liquid mercury rises around the tubes and the vapor forms in clearances between the tubes at the hexagonal corners. The upper part of each tube

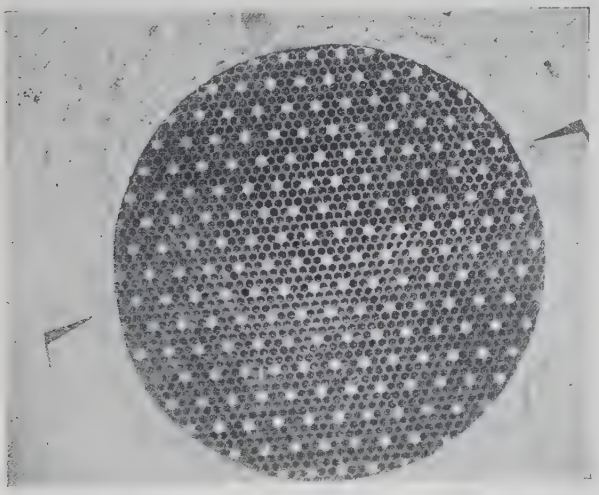

FIG. 223. Bottom of Mercury Boiler.

acts as superheating surface so that the mercury vapor is delivered by the boiler with a little superheat which is desirable for the reason that it probably tends to prevent cutting of the turbine blades.

The most difficult and novel part of this system is the mercury boiler. While mercury is a good heat conductor, it does not

wet steel and consequently considerable temperature differences are required to deliver heat to it at a high rate. When it begins to produce vapor on the heating surfaces this condition becomes rapidly worse. Successful mercury boilers are dependent upon rapid circulation of the liquid. The large difference of pressure between the top and the bottom of the mercury in the boiler, due, of course, to the relatively large specific gravity of the mercury, prevents the boiling of the circulating liquid until it is well started upwards. This requires that the rapid heat delivery must be confined to the part of the surface of the liquid mercury which is not much disturbed by boiling. Rapid circulation is essential and the places for discharging the mercury vapor must be so proportioned that the circulation will not be checked by the escape of the vapor. If these spaces are too small the liquid mercury will be given motion somewhat like a charge of shot, and prohibitive back pressure will result which will check the circulation. These conditions seem to be best obtained by the use of dead-ended tubes with " interior structures " which provide the independent circulation for each tube. These tubes should be so arranged as to receive radiant heat from below with the hot furnace gases passing upward in rather small spaces between them. Best results will probably be secured with all the tubes receiving equal amounts of heat, both from radiation and from contact with the gases.

A mercury boiler should be made in sections operating in parallel and put together in such a way that any section may be removed for cleaning and repairing as may be necessary. This type of boiler has the advantage that its heating surface is free from expansion strains. It also makes possible the calorizing of the tubes. This process, which was developed in the General Electric Research Laboratory, " aluminizes " the surface of the tubes so that they are immune from burning at high temperatures. This process is used successfully in petroleum stills at much higher temperatures than are necessary in mercury boilers.

Mercury does not oxidize very rapidly even when exposed to air at high temperatures, but even a small degree of oxidation

seems to render the metal adhesive and makes it very difficult to separate finely divided foreign matter. Experience has shown, that if the scum formed by oxidization accompanied by scale, dirt, cuttings from the steel, etc., is allowed to freely form and circulate in a mercury-boiler system, accumulations are likely to occur in interior passages, and that in these accumulations large crystals of red oxide are likely to form, increasing the bulk of solids and causing danger of stoppages. For these reasons it has been found desirable to carefully protect the mercury from frequent or continued exposure to oxygen, and this has been done by filling the boiler and condenser with illuminating gas when they are shut down. Arrangements have also been made by which gas is kept in the cleaning sump and can be kept in contact with the mercury which leaks from the packings, although this small quantity could be cleaned continuously as it returns to the system.

In such apparatus the temperature differences are very large and expansion strains must be scrupulously guarded against. The problem is similar to that in properly designed steam apparatus, but much more important because leaks are prohibitive and any repeated excess strain will make a crack. In all welded joints the weld should be made much stronger than the metal adjacent to it; otherwise small movements may concentrate there and develop cracks.

In the first ventures which have been made in mercury turbines, single wheels of the impulse type, like the original DeLaval turbines, have been used. This was done for the sake of simplicity, the speed conditions being suited to such a wheel. It was not known how much the mercury might wear the blades. Mercury discharged at high velocity and high temperature erodes ordinary steel rapidly. It has been found, however, that tempered high-speed tool steel is hardly at all affected under the severest conditions. The Hartford turbine was fitted with blades of this metal and some of soft steel. Neither has been even slightly affected, and the inference is that a turbine with a plurality of stages and blades of ordinary steel can be used.

The mercury turbine has a hooked-on bucket construction by which the wheel can be quickly rebucketed by a man working inside of the condenser.

In many respects the problems of mercury turbines are similar to those of steam turbines. The velocities involved, however, are of the order of one-third and the mechanical problems are therefore much easier notwithstanding the high temperature.

Two types of shaft packings have been successfully used in mercury turbines, in one case the seal being a centrifugal type sealed with liquid mercury, and in the other being made with mercury vapor. The latter type has been found most convenient.

The condensing conditions with mercury are peculiarly good. The liquid does not wet the surface and the falling drops tend to move the vapor and also to give added condensing surface.

Steam Generation. The limitation of heat delivery is probably governed largely by heat conduction through the heavy steel tubes; and delivery as indicated by the falling mercury, which has been observed through a lighted window, seems to be quite uniformly distributed over the condensing surface. This makes a very good condition for the production of steam. The steam space can be made very large without inconvenience or appreciable added expense.

Cleaning Tubes. The tubes are accessible from above through handholes at the top, and can be cleaned by inserting into the top of the tube a nozzle connected to a piece of flexible pipe or hose. Through this another small hose can be run down to the bottom of the tube, and scale or dirt can be flowed out with water after it has been loosened by the ordinary means.

Since it is economical to use the mercury turbine as much as possible, the normal governing is done on the steam end and the governor of the mercury turbine operates only as a speed-limiting device, being set to operate above the running speed fixed by the steam-turbine governor.

The furnace is operated and pressure and level in the steam part are held just as in the case of an ordinary steam boiler. If the mercury turbine cannot use the vapor made by the fire, it

is by-passed through the safety valves. If the steam made cannot be used, the steam safety valves must blow as in any boiler. The mercury level in the boiler is indicated to the fireman by float gages, the motion of which is transmitted magnetically through disks of non-magnetic steel welded into the ends of the boiler sections. If a loss of mercury should be observed the temperatures should be checked as quickly as possible so that the loss may be reduced as much as possible.

The whole apparatus for this purpose has been developed with a view to avoiding the possibility of leaks, and experience with much experimental apparatus over a period of years has indicated that the desired results are not very difficult of attainment. With proper methods of welding and of proportioning of parts, leaks which may occur through imperfect work, imperfection of material, or expansion strains improperly provided for will generally be of the nature of minute cracks — and mercury leaks slowly on account of its high density. Means have been developed by which the presence of a very small quantity of mercury in the flue gases can be shown by the discoloration of a strip of treated paper. Most of the parts which carry mercury under pressure are in the flue-gas space, which — being subject to stack suction,—cannot deliver fumes to the air which is breathed. The parts which are not so situated are completely surrounded by sheet-metal enclosures outside the lagging.

On several occasions men have been in contact with much mercury vapor in hot places, and in one or two cases men have been temporarily quite sick as an apparent result. There has been no case of salivation or continued symptoms of mercury poisoning, although many of the men have been employed for long periods. The experience of mercury production and its use in other arts would indicate that, with reasonable precautions, the danger of poisoning should not be appreciable.

Economies. The most economical method of operating this process will generally be to get as much heat as possible into the feed water by bleeding the steam turbine as in the best modern steam practice. Since such units will not be run at heavy over-

loads, as is common with steam boilers during peaks, it will be practicable to put a large quantity of heat into the incoming air without danger of burning the brickwork, and it is thought that such a device as the Ljungstrom air heater can be used to great advantage in bringing the flue gases to a low temperature and delivering their heat to the furnace. The heat from the furnace will be used to heat and vaporize mercury and to give such superheat to the steam as may be expedient with the steam apparatus used.

With such an arrangement, if we assume 70 per cent. efficiency, 70 pounds pressure for the mercury cycle, and the most desirable steam conditions, we should be able to operate on base load for about 10,00 B.T.U. from fuel per kilowatt-hour.

For the purpose of giving an idea of possibilities in existing stations, the cases of three large plants — among the best in the country — operating for the month of January, 1924, have been considered. The following table shows the conditions in these plants and the gain in net output which would have resulted if the same fuel had been burned under mercury boilers, with the same auxiliary and flue-gas conditions; it being assumed that the mercury turbines with generators are 70 per cent. efficient and that a mercury pressure of 70 pounds gage is used:

	Plant No. 1	Plant No. 2	Plant No. 3
Capacity in Kilowatts	180,000	50,000	100,000
Economizers	No	No	Yes
Steam Pressure, lb. per sq. in.	219	286	235
Superheat, degrees Fahrenheit	217	245	200
Load factor, per cent	57	50	50
B.t.u. in fuel per kilowatt-hour	19,850	19,700	18,250
Gain in output if fuel had been burned under mercury boilers, per cent	65	58	51

These estimates do not admit of much error. The combustion conditions would be the same in both cases and no additional auxiliary load would be occasioned by the change. There would be some difference in banking and starting since the mercury

equipment would not generally be designed for heavy overloading at peaks as is common with steam boilers.

With the same steam turbines and condensers in each of these cases plant capacity could be more than doubled by providing full mercury-boiler equipment. From this fact it may be inferred that the process affords great advantages in the matter of investment as well as of operation.

The demand for mercury has always been strictly limited and it is probably not safe to predict positively the consequence of a greatly increased demand. The cost is governed largely by the richness of ore. Ore of various grades exists in many places and now it only pays to work the best of it. A well-informed mercury-mine operator has estimated that a maintained price of $2 per pound would call forth from known sources in the United States enough mercury, if used as we expect, to correspond in plant capacity to the largest yearly output of high grade steam turbines. Several other experienced persons have expressed opinions generally agreeing with such a view. Unworked deposits are known in Alaska, South America, New Zealand, and elsewhere, and a rise of price will undoubtedly bring much more to light. It is thought, therefore, that we need not slack our efforts for the present through fear of a shortage of mercury.

CHAPTER XVII

GAS TURBINES.

THE development of the gas turbine, which should combine the high thermal efficiency of an internal combustion engine with the mechanical simplicity of the steam turbine, has occupied the attention of a number of able engineers from time to time but without unqualified success. Because of the severe conditions due to the very high temperatures of the gases after combustion, there are many difficulties in construction which in a large measure offset the otherwise simple mechanical construction.

It may well be said that the designer of gas turbines is between "the two horns of a dilemma." If he tries to utilize the gases at the temperatures resulting from expansion in a single normal nozzle, the nozzles and blades will deteriorate very rapidly, and for the best efficiency the speed of rotation of the turbine must be made too high for utilization for general power purposes without the application of reducing gears; and, if on the other hand, he cools the gases by the injection of water or excess air into the combustion chamber to make the temperature of the gases suitable for the materials available for machine construction, the high thermal efficiency stated by the simplest laws of thermodynamics* is, of course, not attained.

Since the gas turbine is certainly not yet out of the experimental stage,† although there are commercial applications, it is not out of place to give some space to its history.

Probably the oldest form of gas turbine is the ancient propeller

* The thermodynamic efficiency of a heat engine is expressed by $\frac{T_1 - T_2}{T_1}$, where T_1 is the initial and T_2 is the final temperature of the cycle. By lowering the value of T_1, the efficiency is reduced in much greater proportion than the reduction in the temperature.

† It is stated that quartz nozzles have been used successfully, but they are very expensive and fragile.

mechanism, known as a **"smoke-jack,"** which was used for operating the turnspit* of large open fireplaces. An illustration of this "smoke-jack" is shown in **Fig. 218,** which is a copy of an old drawing published in Bishop Wilkin's *Mathematical Magic* in 1680. A similar apparatus is described by Cardan about 1550. This mechanism was placed in the chimney and was driven around by the ascending current of hot gases from the fire. Its motion was transmitted by gearing and belting to the spit on which the joint of meat was carried in front of the fire. The power of this "smoke-jack" can only be estimated by the work of the turnspit dog which it replaced. It must, therefore, be rated at least one "dog-power."

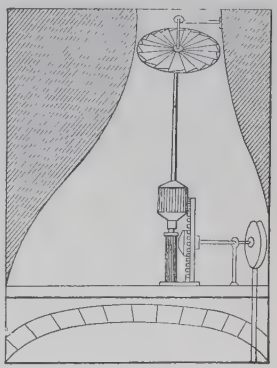

FIG. 224. A Chimney Turnspit or "Smoke-Jack."

The earliest attempt to construct a gas turbine on scientific principles was probably made by Stoltze of Charlottenburg, who received a patent for what he called a "hot-air" turbine in 1873. This apparatus consisted of two turbines on one shaft, one acting as an air compressor and the other as a power turbine. The function of one of these turbines was to draw in and compress the air to about 40 pounds per square inch absolute. Part of this compressed air was then passed through a combustion chamber or furnace, where it supplied the oxygen required for the combustion of the gas or oil fuel. Another part went through a heating chamber and was later mixed with the gases of combustion from the furnace. The mixture of gas and air was then expanded in the second turbine. The useful power developed by such a turbine is the difference between that developed by the gas turbine and that required to drive

* Turnspit is the name usually applied to the dog which was used to turn, by means of a suitable mechanical contrivance, a spit or long iron bar, pointed at one end, used to hang up meat to be roasted.

the turbine-compressor. A turbine designed to develop 200 horsepower has been constructed on this plan, but it has not been commercially developed. It is very doubtful, if all other difficulties were overcome, whether this method of air injection could give nearly as good economy as water injection. (See page 510.)

Some attention has been given to the development of the **explosion gas turbine,** of which a very simple form is shown in **Fig. 219.** It consists of a combustion chamber **E,** of which one end is closed by a large valve **A** opening inward, admitting air through the parts **B, B** and fuel through tubes **F, F** opening into the valve seat. The mixture of gas and air is ignited by electric sparks at **I,** and the products of combustion are discharged from

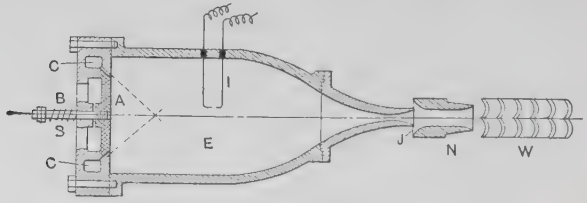

FIG. 225. A Simple Explosion Gas Turbine.

the chamber through a small opening J leading into the nozzle **N,** where air, as shown by the arrows, is mixed with the gases to reduce their temperature before they reach the blades of the turbine wheel **W** opposite the nozzle.

It is a well-established fact that when a mixture of gas and air is exploded there is first a sudden expansion and then, because of the combination of the hydrogen in the burned gases with the oxygen in the excess air to form water, a vacuum is produced. This phenomenon is applied in this apparatus to operate the valve **A,** which by the formation of a vacuum is drawn inward to admit another charge of gas and air. It is stated that in such a turbine the explosions will occur very rapidly — from 3500 to 5000 per minute — so that there is a practically continuous discharge upon the wheel. The efficiency of an explosion motor of this kind is very low because of the lack of compression; but

its efficient development does not seem to be impossible. If in some way efficient combustion by explosion can be secured without compression, then a most economical power development could be attained with an explosion combustion chamber with the fuel and air valves operated automatically "by vacuum" and the injection of probably comparatively large quantities of water after combustion. Such an apparatus would be simple

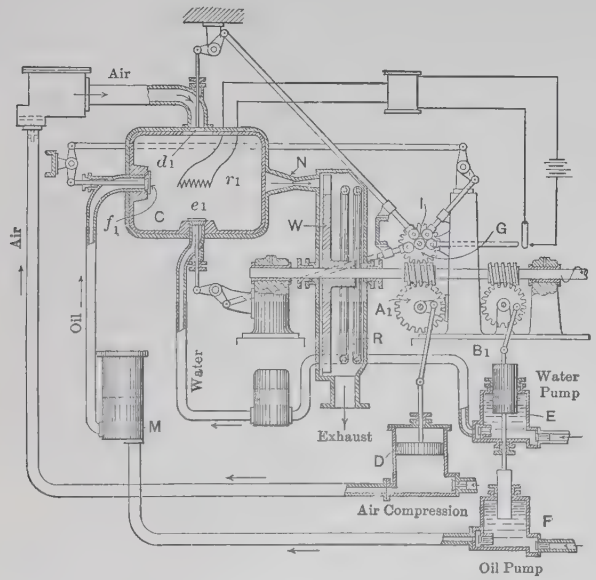

FIG. 226. Section of a Zoelly Explosion Gas Turbine.

indeed compared, on the one hand, with the complicated combination of the steam boiler with external firing and the steam turbine, or, on the other hand, with the complex reciprocating gas engine. **Fig. 220** illustrates a Zoelly explosion gas turbine. It consists essentially of an explosion chamber **C,** a turbine wheel **W,** water and oil pumps, and an air compressor. The pumps and compressor are of the reciprocating type and are driven by the main shaft by means of the worm gears $\mathbf{A}_1$ and $\mathbf{B}_1$. The valves regulating water, oil, and air admission and the ignition device $\mathbf{r}_1$, are operated by the gases, and steams are

expanded in the nozzle **N** and impinge upon a turbine wheel **W** of the De Laval type. Some of the heat remaining in the exhaust gases is absorbed by water coils **R** which serve to heat the injection water. In the operation of this apparatus, air is admitted first into the explosion chamber and then the oil, as the air is supposed to act as a shield against back-firing. After the charge has been exploded and the maximum pressure has been reached, the cooling water is injected.

The more successful gas turbines, however, are those operating by combustion at constant pressure. In this type the air and fuel (oil or gas) are delivered under pressure to a suitable com-

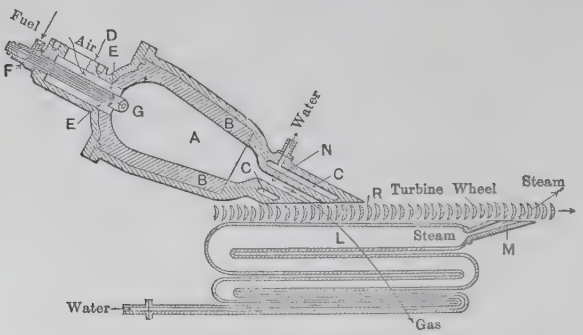

FIG. 227. Diagrammatic Illustration of the Combustion Chamber and Steam Coils of a Modern Gas Turbine.

bustion chamber **A** in **Fig. 221** which is maintained at a red heat, so that the combustion is continuous. The products of combustion are usually cooled by water which is injected into the nozzle as in the explosion type. The heat energy in the burned gases is converted into velocity in an expanding nozzle **N** and are discharged at a high velocity upon the blades **R** of the turbine wheel. Designers of this type of gas turbines have generally assumed that nozzles and wheels of the De Laval type are most suitable, and their energies are devoted at present to the production of a suitable combustion apparatus and a high efficiency rotary compressor. **Fig. 222** shows a typical small gas turbine set up for a brake test.

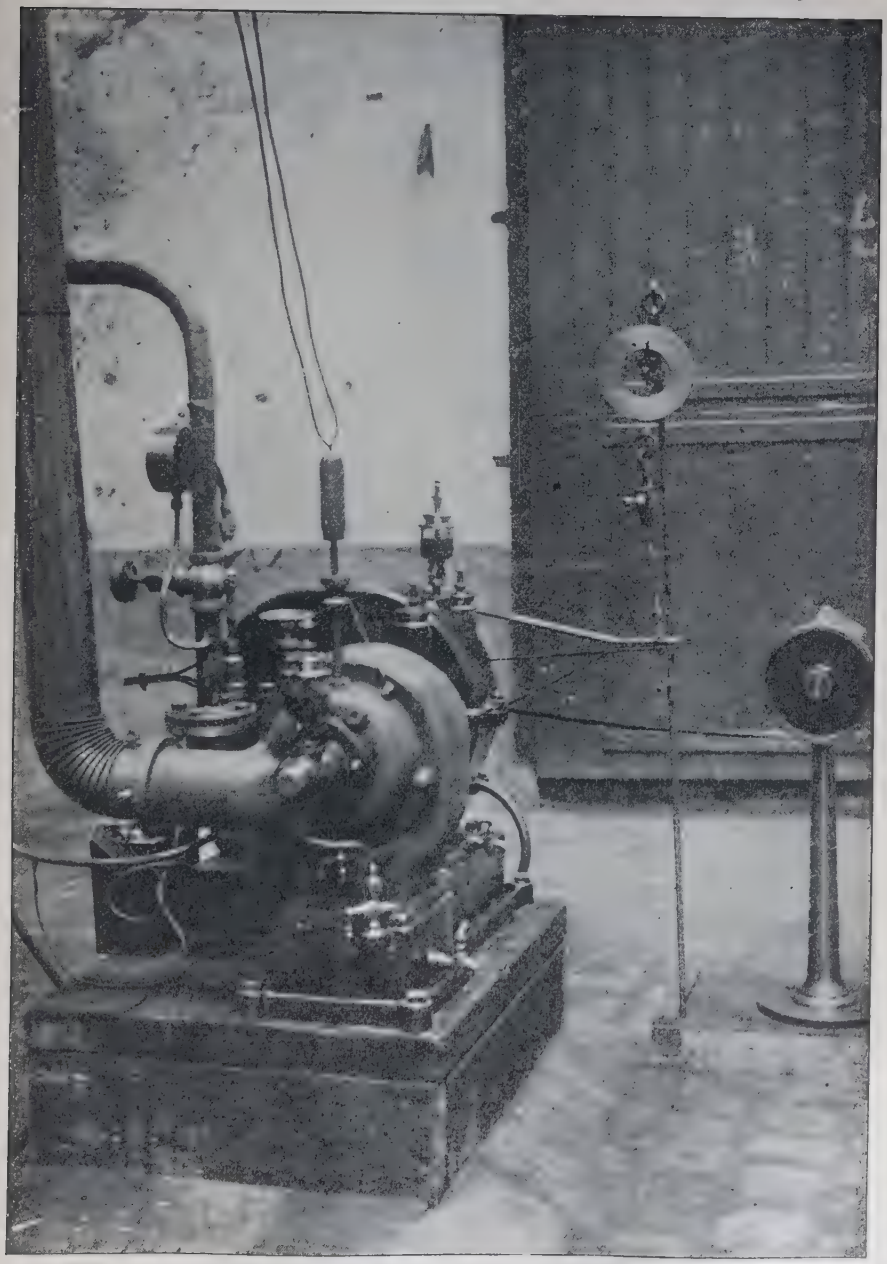

FIG. 228. A Gas Turbine set up for a Brake Test.

In practice the combustion chamber is lined with carborundum, and to allow for expansion the carborundum is backed with sheets of asbestos to provide a soft and elastic packing. Exhaust gases are usually discharged over a coil boiler **L**, and the steam which is produced is also delivered upon the turbine

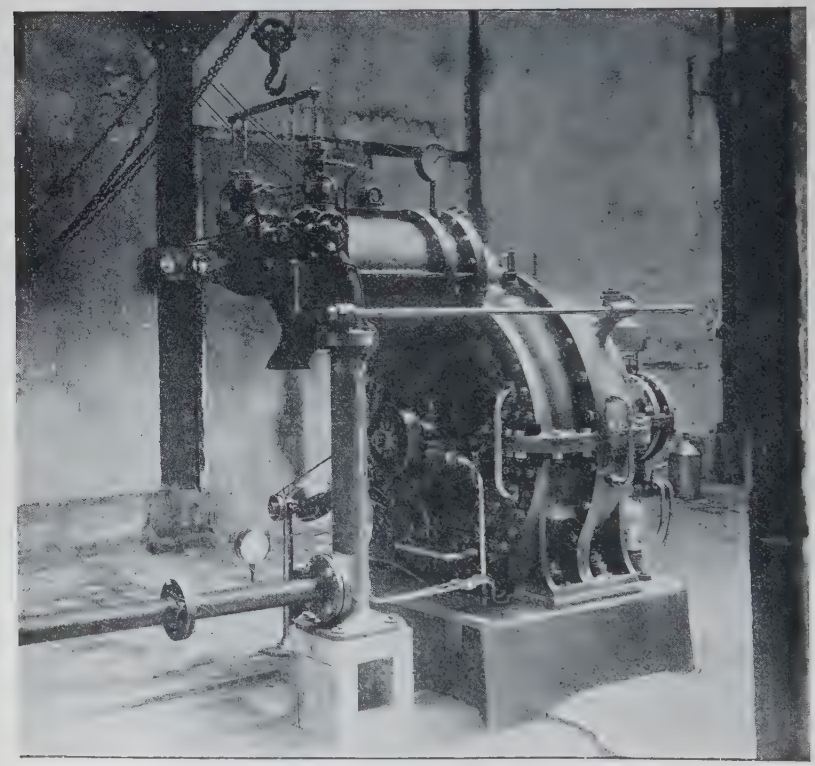

Fig. 229. Arinengaud and Lemale's Gas Turbine.

wheel by a separate nozzle **M**. When the turbine is in operation the lining becomes sufficiently hot to ignite the fuel as it is forced into the chamber.

A gas turbine of this latter type designed by Arinengaud and Lemale of Paris is illustrated in **Fig. 223**. It is a machine developing 300 net horsepower at 4000 revolutions per minute.

A Rateau turbine-compressor shown direct connected to the gas turbine in **Fig. 224** has been specially designed and built by Brown, Boveri & Co. of Baden, Switzerland, for use with this turbine. The compressor gives a mechanical efficiency as high as 65 to 70 per cent. and delivers 1 cubic foot of air per second

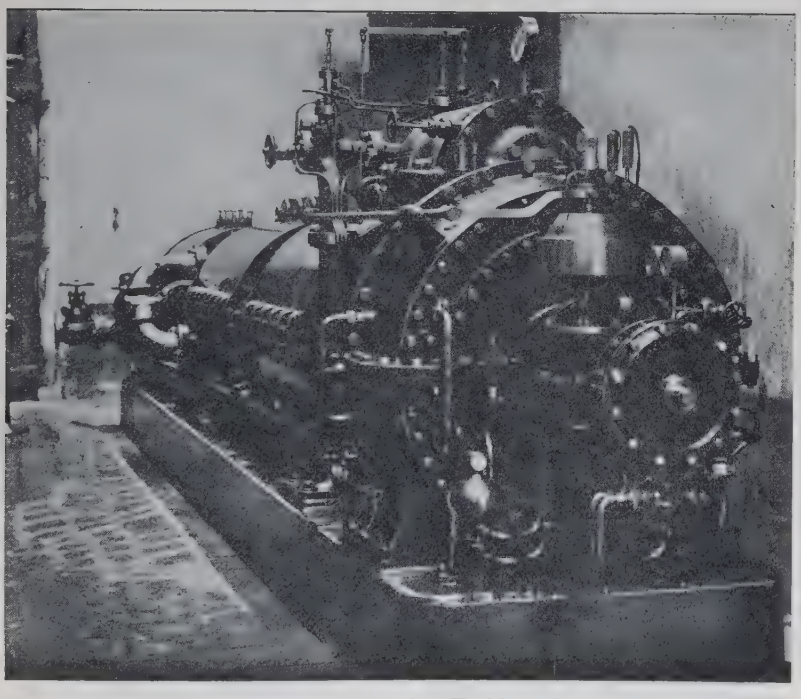

FIG. 230. Arinengaud and Lemale's Gas Turbine Direct Connected to a Rateau Turbine-Compressor.

at a pressure of from 6 to 7 atmospheres. Compressed air is used for starting, and a simple ignition device is used for firing the charge till the combustion chamber becomes sufficiently heated. M. Barbezat, who has now charge of the development of this turbine, states that the total efficiency is not as high as that of reciprocating gas engines; but no data are given.

Gas turbines have been applied practically for the propulsion of submarine torpedoes. Formerly some types of torpedoes received their motive power from a rotary motor like a turbine wheel, driven by compressed air. Recently gas turbines have been installed with an obvious gain in power and saving in weight. These gas turbines develop 120 horsepower at 1000 revolutions per minute. The expansion ratio of the nozzles is 8.4 and the weight per horsepower, without the compressor, is 1.3 pounds.

It is obvious, then, that great progress has been made recently in the development of the gas turbine; and when the ratio of progress is compared with the time required to bring the reciprocating gas engine to its present state of development, there is reason for hoping for greater accomplishments in the near future. The gas turbine question includes, however, a number of unsolved problems; but, on the other hand, the sources available for their solution are numerous. The development of these machines will permit the utilization for power of mixtures of air with coal gas, petroleum, or alcohol; and it will also make possible a combination of the explosion motor and the steam turbine for many purposes.

The problem is laid plainly before the physicist, the engineer, and the machinist, and to bring about a satisfactory solution will doubtless require all their combined resources.

Questions of Theory. The success of the steam turbine naturally directed the attention of engineers to the possibilities of the gas turbine with the expectation of combining the high thermal efficiency of the gas engine with the constructive advantages of the steam turbine.

As explained in the preceding pages a gas turbine can be operated by either of two methods:

(1) By combustion of the fuel in a chamber **at constant pressure.**

(2) By an **explosion method.**

Combustion at constant pressure seems to be the more practicable method and is the one generally adopted.* In the opera-

* Theoretically the same efficiency should be secured with either of these two systems of combustion. Combustion at constant pressure is an adaptation of the

tion of this method gas and air are compressed in separate chambers or compressor tanks to a suitable pressure, usually about 100 pounds per square inch absolute. The gas and air are admitted through separate valves to the combustion chamber, where the gas is ignited and burned at constant pressure. Just as in a reciprocating gas engine, the air is provided to furnish the oxygen to support combustion. After combustion the burned gases escape through a suitable nozzle to impinge on the blades of the turbine wheel. On account of the extremely high temperatures resulting from the combustion (about 2500 degrees F.), it is impracticable to design a gas turbine with more than one pressure stage and therefore only "nozzle types" can be used.

Comparison of Losses in a Gas Turbine and in a Gas Engine. It is reasonable to assume that the radiation and cooling water losses will be about the same for a gas turbine as for a reciprocating gas engine; and from a practical viewpoint the work required for the compression of gas and air is about the same for combustion at constant pressure as for explosion. After eliminating, therefore, the radiation, cooling water, and compression losses the same energy remains for utilization in each of these two prime movers. In gas engines from 20 to 25 per cent. of this energy is lost in the suction and exhaust resistances, engine friction, and the heat loss in the exhaust. Corresponding to these losses in the gas engine, there are in the gas turbine losses due to nozzle, blade, and disk friction, the heat in the exhaust, and bearing friction. The sum of these latter losses in a steam turbine would be about 40 per cent., and they will probably be not much different, in the total, in a gas turbine. It is argued in favor of the gas turbine that it is not impossible "to isolate the

well-known Brayton cycle. It has been shown that exactly the same thermal efficiency can be secured by such combustion as in the ordinary explosion process if it is assumed that the specific heat of the gases is practically constant and that the final pressure after compression in the explosion motor is the same as the constant pressure of combustion in the Brayton cycle. It follows then that the ideal gas turbine will theoretically operate with the same fuel consumption per unit of power as the ideal four-cycle gas engine. (Cf. Lorenz, *Zeit. Verein deutscher Ingenieure.* 1900, page 252.)

combustion chamber internally" so that no cooling water will be needed.

The greatest practical difficulty in the way of the successful operation of gas turbines results from the high temperature of the gases at end of expansion. Nozzles can be cooled by water-jacketing, but the wheel blades are liable to rapid deterioration. The necessity for lowering the temperature of combustion is now generally recognized, and the hot water from the water jackets is sprayed into the compressed air supplied for combustion. By this means the temperature in the combustion chamber can be greatly reduced but at a considerable loss, however, in efficiency. It is making, in other words, the efficiency of the gas turbine approach the lower thermal efficiency of the steam turbine.

It seems probable that the most promising field for the gas turbine will be found to be in the utilization of bituminous coals forming tar and asphaltum when used for making gas. Such coals cannot be used in the manufacture of gas for reciprocating gas engines, as the accumulation of tarry matter in the cylinders is particularly objectionable. In a gas turbine, however, the gas is burned under pressure, in an enclosed chamber where accumulations of foreign matter cause no serious difficulties.

It cannot be expected that gas turbines can be commercially successful for general power purposes if a reciprocating compressor must be used in connection with them, because a gas turbine with a compressor of this type is quite as complicated as the reciprocating gas engine. Compressors of the rotary type, on the other hand, have usually a very low efficiency; probably in most cases not more than 50 per cent. Decided progress is being made in the successful designing of compressors of the turbine type which will give from 60 to 70 per cent. efficiency. It is not difficult to understand how the net useful work of a gas turbine may be nil under conditions that are not unusually poor. For if the efficiency of the turbine is 60 per cent. and the theoretical work of compression is 40 per cent. of the output (which is not an absurd estimate), then with a compressor efficiency of only 40 per cent. the theoretical power absorbed by the compressor is $60 \times .40$, or

24 per cent. of the output, or the **actual** power delivered to the compressor is 24 ÷ .40, or 60 per cent. of the output. And the compressor takes all the power the turbine can supply. It is obvious then that compressors with the usual low efficiencies of the rotary types are not worth considering.

BRAYTON CYCLE CALCULATIONS FOR GAS TURBINES.

	Maximum Pressure, Pounds per Square Inch Gauge.	Heat Added, B.T.U. per Pound of Working Substance.	Pounds of Water per Pound of Working Substance.	Maximum Temperature, Deg. F., for a Perfect Gas only.	Final Temperature, Fahrenheit, for a Perfect Gas only.	Ratio of Compressor Power to Net Power.	Velocity of Impulse Wheel, Feet per Minute.	Net Thermodynamic Efficiency, per cent.
	p_1	Q	x	t_2	t_3	r	V	e
Case I:								
Adiabatic compression. Perfect machine with no losses.	90	1,000	0	4,665	2,435	.22	115,300	43
	90	250	0	1,505	652	.87	71,680	43
	195	1,000	0	4,860	2,008	.27	131,200	54
	195	250	0	1,710	546	1.07	83,740	54
	495	1,000	0	5,190	1,562	.34	147,600	64
	495	250	0	2,040	434	1.38	98,300	64
Case II:								
Isothermal compression with regenerator. Perfect machine with no losses.	90	1,000	0	9,239	5,039	.08	159,100	93
	90	250	0	1,965	915	.39	79,570	72
	195	1,000	0	7,376	3,176	.11	159,100	91
	195	250	0	1,498	448	.61	79,570	62
	495	1,000	0	6,087	1,887	.15	159,100	87
	495	250	0	1,176	126	1.03	79,570	49
Case III:								
Isothermal compression with regenerator. Actual machine with assumed losses. Air excess.	56	333	0	2,147	1,200	.74	75,400	27
	82	392	0	2,398	1,200	.68	84,800	30
	61	445	0	2,867	1,619	.50	86,485	31
	98	545	0	3,233	1,619	.47	99,960	35
	33	445	0	3,179	2,139	.40	80,155	28
	61	569	0	3,699	2,139	.36	96,775	33
Case IV:								
Isothermal compression with regenerator. Assumed losses. Cooling water.	79	625	.37	1,275	600	.67	75,000	13
	47	638	.36	1,680	1,000	.43	75,000	15

THERMODYNAMIC THEORY OF THE GAS TURBINE.

The elementary thermodynamics of the gas turbine involve apparently no new investigations. The problems are principally mechanical and metallurgical. In the above table the efficiencies of various gas turbine cycles are given as calculated by Sanford A. Moss. In all cases it is assumed that the heat of combustion is developed at constant pressure and that the exhaust gases are discharged at constant pressure. Cases I and II refer to theoretically perfect engines, and cases III and IV to engines with probably normal losses. It is assumed for these latter cases that the turbine efficiency is 70 per cent. and of the compressor is 83 per cent.* The efficiency of the regenerator used for the cases of isothermal compression is taken to be 60 per cent. These figures are certainly above the upper limits of possible results in practice.

Thermodynamic efficiencies of gas turbines operating with combustion **at constant pressure** will now be discussed. The equations given are, in most cases, those relating to a perfect gas.

The total heat **H** of a gas at **constant pressure** may be expressed by the following equation:

$$\mathbf{H = c_v T + RT = (c_v + R)\,T = c_p T + constant,}$$

where **T** is the absolute temperature, $\mathbf{c_v}$ and $\mathbf{c_p}$ are respectively the **mean** specific heats of the gas at constant volume and constant pressure between zero temperature and **T**, and **R** is a constant varying for its value with the kind of gas.

Fig. 225 represents the cycle of operations when a pound of a mixture of gas and air is compressed and later expanded in doing work. Adiabatic compression is assumed. One pound of the mixture is taken into the compressor cylinder at the temperature $\mathbf{T_0}$ and volume $\mathbf{v_0}$ and is compressed as represented by the adiabatic **O 3** to the temperature $\mathbf{T_3}$ and volume $\mathbf{v_3}$. In the passage to the combustion chamber it will be assumed for simplicity in

* Efficiencies of 60 per cent. for the turbine and not more than 70 per cent. for the compressor would probably be more reasonable.

the calculations that the temperature drops to the initial temperture T_0. If the total heat contents at the points **0, 3, 3′, 4,** and **5** are represented by the corresponding symbols H_0, H_3, H_3', H_4,

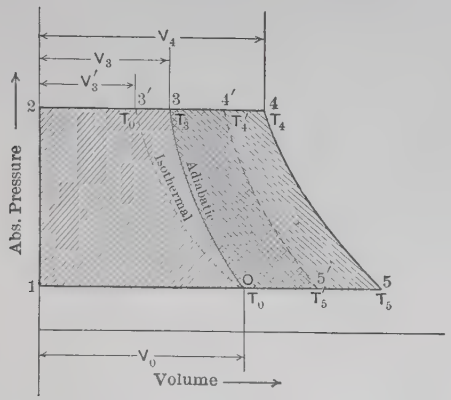

Fig. 231. Diagram of the Theoretical Action of a Gas Turbine and Air Compressor.

and H_5, the indicated work of compression is the area **0123**, which will be represented in heat units by

$$W_c = H_3 - H_0.$$

It is assumed, however, that immediately after compression the temperature falls to T_0, so that the volume is reduced from v_3 to v_3'. Now because the point **3′** is on the isothermal **0 3′**, it is obvious that $H_0 = H_3'$. During combustion a quantity of heat Q_1 is added to the mixture, increasing the temperature to T_4 and the volume to v_4; or, in other words,

$$Q_1 = H_4 - H_3'.$$

When the gaseous mixture is expanded the work W_1 is performed, which may be calculated after determining H_4 in the preceding equation; then

$$W_1 = H_4 - H_5.$$

The heat lost by the exhaust gases in cooling from T_5 to T_0 is $H_5 - H_0$; and since this quantity is called Q_2, we can write

$$W_1 = (H_4 - H_3') - (H_5 - H_0) = Q_1 - Q_2,$$

and placing H_0 for H_3' it is apparent that

$$W_1 = H_4 - H_5 = Q_1 - Q_2.$$

The theoretical discharge velocity V in feet per second at the mouth of the expansion nozzle is calculated from the usual equation,

$$\frac{V^2}{2g \times 778} = Q_1 - Q_2 = H_4 - H_5 = c_p (T_4 - T_5).$$

Using the same symbols as before for the indicated work of compression, the theoretical effective power of the turbine is

$$W_e = W_1 - W_c = Q_1 - Q_2 - W_c.$$

If the mechanical efficiency of compression is x and the efficiency of the gas turbine, y, is determined in the same way as for a steam turbine, by constructing velocity triangles and calculating the nozzle, blade, and wheel friction losses for a single stage turbine, then the theoretical **net power of the turbine** is

$$W_e' = (Q_1 - Q_2)\, y - \frac{W_c}{x}.$$

Since the heat consumed per pound of the mixture is Q_1, the total efficiency z of the gas turbine apparatus is

$$z = \left((Q_1 - Q_2)y - \frac{W_c}{x}\right) \div Q_1.$$

Efficiency of Gas Turbine with Water Injection. If m pounds of water are injected into the combustion chamber just before the expansion begins, an equal weight of steam is found, which it will be assumed is superheated to the temperature T_4', which will now be also at the temperature of the mixture, lower, of course, than T_4.

The temperature of the mixture of burned gases and steam T_4' is calculated by solving the following equation:

$$c_p\,(T_4 - T_4') = m\,\{q_4' - q_i + r_4' + c_p'\,(t_4' - t_{s4})\},$$

where q_4' is the heat of the liquid, r_4' is the heat of vaporization, and t_{s4} is the temperature of saturated steam, — all at the corresponding pressure P_4'.* The other new symbols are q_i, which is the heat of the liquid at the **injection temperature**, and c_p', which is the specific heat of superheated steam. In this equation t_4' and t_{s4} are ordinary (not absolute) temperatures.

The temperature T_5' is calculated for assumed adiabatic expansion by using the exponent k' calculated from the equation below:

$$k' = \frac{c_{p1} + mc_{p2}}{c_{v1} + mc_{v2}},$$

in which the subscript 1 refers to the specific heats of the mixture and the subscript 2 to specific heats of the steam. The temperature T_5' is used to determine the value of Q_2, which is the quantity of heat abstracted from the mixture to cool it from the condition at 5 to the condition at 0. It is calculated from the following equation:

$$Q_2 = m\,\{c_p'\,(t_5' - t_{s5}) + r_5' + q_5' - q_0\} + c_p(t_5' - t_0).$$

In this equation t_5' is the "ordinary" temperature corresponding to the absolute temperature T_5', t_{s5} is the temperature of saturated steam, r_5' is the heat of vaporization, and q_5' is the heat of the liquid, — all at the pressure p_5'; q_0 is at the temperature t_0. It will be assumed also that t_0 is less than t_{s5} and that the latter is

* The "partial" pressure of the steam at the temperature T_4' can be calculated approximately by the formula

$$P_4' = p_3 \frac{47\,m}{29.3 + 47\,m}$$

if we assume the constants for the exhaust gases are the same as for air. In the same way the "partial" pressure of the steam after expansion is calculated thus:

$$P_5' = p_1 \frac{47\,m}{29.3 + 47\,m}.$$

less than t_5', as is generally the case, neglecting the small quantity of heat in the water vapor remaining in the mixture at the temperature t_0 after the burned gases and steam have been discharged from the nozzle.

We can write the following equations, applying the same methods as for the case without the use of injection water:

$$\frac{V_1^2(1+m)}{2g \times 778} = Q_1 - Q_2,$$

$$W_e' = (Q_1 - Q_2)\,y - \frac{W_e}{x},$$

$$z = \frac{(Q_1 - Q_2)\,y - \frac{W_e}{x}}{Q_1}.$$

Total efficiency, z, increases with the pressure of compression to a certain limiting value and then decreases. But for the practicable values of compressor and turbine efficiencies (x and y) the values of the theoretical total efficiency are not particularly good.

The equations given here for velocity and efficiency can be used to investigate the best operating conditions by varying the pressure of compressions and the quantity of injection water.

Another method for reducing the temperature of the gases is to use a large excess of air above the quantity needed to support combustion. The most economical method is probably that of partly vaporizing the cooling water in the water jackets. The advantage of using water is that likewise it does not need to be compressed, and therefore it can be injected into the combustion chamber without the expenditure of much energy.

Many of the troubles in the combustion chamber of a gas turbine are difficult to explain. One of the most serious difficulties is the occasional missfire of the incoming charge which is soon followed by a violent explosion. It is also difficult to secure smokeless combustion. Improvements are being made, however, with the object of maintaining higher temperatures in the combustion chamber, and the results are encouraging.

CHAPTER XVIII

ELECTRIC GENERATORS FOR STEAM TURBINES.

In the early years of the development of steam turbines it was the primary aim of the turbine engineer to reduce the speed of the turbine to operate satisfactorily when direct connected to electric generators. To accomplish this purpose De Laval introduced his famous helical gearing and Curtis applied the principle of velocity stages. To-day, however, the trend of developments is in the other direction. The electrical engineer is being urged to use his best skill to design generators to operate satisfactorily at higher and higher speeds, because in this way the efficiency of the turbine can best be increased. Very great strides have been made in the perfection of alternators for steam turbines; but in the design of direct-current generators to operate at high speeds much is still to be desired. In fact, for high speeds, commutation is indeed a very difficult problem. The potential difference between adjacent commutator bars of engine-driven direct-current generators is usually about 10 volts; while for turbine-generators the limit is about 30 to 40 volts per bar.

DIRECT-CURRENT GENERATORS.

Sparking Limit. In slow-speed direct-current generators the output is limited either by the sparking or by the heating. On account of the necessarily small dimensions of the armature and the extremely high periodicity, with the resulting large iron losses, it becomes necessary, on the other hand, in a high-speed generator to employ artificial cooling devices. With the use of forced ventilation heating is no longer a factor limiting the output, and the difficulty lies then principally in the **sparking.** The quality of the commutation in any electric generator depends largely on

the number of ampere-turns which can be placed on the surface of the armature; but there are also a number of other electric and magnetic conditions to be considered, particularly the effectiveness of the **commutating poles,*** located between the main poles. Another important factor is the mechanical condition of the armature, commutator, and brushes, which determines in a large measure the **sparking limit.**

On the basis that the maximum permissible ampere-turns per centimeter of the circumference of the armature determine the maximum output the following table has been calculated. At an assumed permissible peripheral velocity of 75 meters † per second ‡ (about 245 feet per second), this table shows the maxi-

Revolutions per Minute.	Diameter of Armature in Centimeters.	Output in Kilowatts.
4780	30	148
2870	50	347
1800	80	670
1435	100	890
895	160	1585
720	200	2080

* When artificial commutation is secured by auxiliary poles placed between the main poles of a generator, short-circuit currents and sparking can occur only when the electromotive force induced by the commutating field is different from the reactance voltage

† The C. G. S. (metric) system of units is applied in this chapter because it is the one commonly used by designers of electrical machinery in America and in England.

‡ It is usually found that the end shells or shields protecting the connections in a revolving armature have stresses most nearly approaching the allowable limits. Stresses in these end shells are calculated as in a ring or band, by the following equation, as expressed approximately in C. G. S. units,

$$V = 10\sqrt{\frac{Sa}{z}},$$

where V is the peripheral velocity of the ring in meters per second, z is the weight of a cubic centimeter of the material, and Sa is the allowable unit stress in kilograms per square centimeter. Since the allowable permissible stress of bronze castings is about 260 kilograms per square centimeter, the maximum allowable velocity is only

mum outputs and speeds which at the present time are obtainable in the very best designs of direct-current generators.*

This table shows that the armature of direct-current generators cannot be constructed to give the required output at the usual speeds adopted in America for Parsons turbines, and that with Curtis turbines, which operate at slower speeds, the limit is reached at 1500 kilowatts full load capacity.

There are two ways of overcoming the limitations of direct-current generators for turbine service. One way is to design the turbines for lower speeds, which entails, however, increased cost and a sacrifice of economy. The other way is to adopt the tandem arrangement of connecting two generators to one turbine as in the usual De Laval designs for the larger sizes.

There is a constant demand for direct-current generators of larger capacities than are now employed, and the problem of increasing the capacity of the generator is becoming very important. The successful production of such machines suitable for much higher speeds than are now attainable would be an improvement effective in two ways: (1) by lowering the steam consumption and (2) by reducing the first cost; and as a result the field of the high-speed reciprocating engine would be still more restricted.

Flash-over Limit. In ordinary slow-speed direct-current generators the only electrical limit to the capacity is sparking. In high-speed machines, however, a new difficulty known as the flash-over limit is met. Its effects are often as serious and as difficult to remedy as any of the commutation troubles. A great many designs of high-speed direct-current generators with satisfactory commutating qualities have been failures because of their tendency to arc around the whole commutator. This trouble must be attributed primarily to the very high potential

55 meters per second; and considering the additional load due to the end connections the permissible velocity becomes only about 50 meters per second. If, however, phosphor-bronze or manganese-bronze castings with an allowable stress of 600 kilograms per square centimeter are used, a peripheral velocity of 75 meters per second is not excessive.

* R. Pohl, *Proc. of Inst. of Elec. Engrs.*, 1907.

difference between adjacent commutator bars — usually about three times the permissible value in slow-speed generators. Usually this difficulty can be remedied by increasing the insulation of the shrinkages and of the brush-gear. It is the flash-over limit, therefore, which determines the allowable voltage per commutator bar and restricts the number of "lines" or flux allowed to enter or leave an armature of a given diameter.

The most obvious line of improvement in turbine-driven direct-current generators is in increasing the peripheral speed of the armature. Steel alloys of very low magnetic conductivity and high tensile strength used in the place of phosphor-bronze for the end shields of the armature will permit the adoption of considerably higher peripheral speeds than are now allowable. If we compare two machines of equal output and speed but with armatures of different diameters in the ratio of 1 to 2, the armature with the larger diameter will be only one-fourth as long as the other; while with the same voltage for both the number of conductors and segments will be doubled.*

ALTERNATING-CURRENT GENERATORS.

The design of alternators with revolving fields to operate at high speeds is not nearly so difficult as for commutating machines. Speed limits are usually determined by the strength of suitable materials for their construction. When it became the general practice to enclose high-speed generators in a sheet-metal casing and to adopt forced or artificial ventilation produced by small fans circulating air through the generator windings, it was possible to regulate the heating limit so that heavier overloads could be carried and for longer periods of time than was possible before. By this method the excessive noise of the early turbine-generators was, at the same time, eliminated.

For the windings of the revolving fields of high-speed alternators, flat strap copper is used by most manufacturers. To make the field spools as small and compact as possible this strap copper

* The voltage per segment is approximately inversely proportional to the peripheral velocity of the armature.

is sometimes coated with a thin layer of enamel for insulation, instead of the usual cotton covering. The necessity of making the exterior surfaces of revolving fields as smooth as possible is generally appreciated by designers.

GENERATOR EFFICIENCIES.

Average efficiencies of the best designs of alternating-current generators intended for operation with steam turbines are given in the following table:

Rated Full Load Capacity, Kilowatts.	Efficiency of Alternator, Per Cent.
50 to 150	90–93
200 to 400	93–94
500 to 900	95
1000 to 2500	96
3000 to 5000	97
6000 to 10,000	98

The efficiency of direct-current high-speed generators is about one per cent. less than that of alternators of the same capacity.

APPENDIX A.

EXERCISES ON STEAM TURBINES.

Exercise 1. What is the velocity of steam discharging at the rate of 200 cubic feet per second through a nozzle having a cross-sectional area of 0.2 square foot? *Ans.* 1000 feet per second.

Exercise 2. If the steam discharging from the orifice mentioned in the preceding exercise weighs .0322 pound per cubic foot, how much energy in foot-pounds per second can this jet develop? How much horsepower? *Ans.* 100,000 foot-pounds per second. 181.8 horsepower.

Suggestion: From elementary mechanics we have the information that the kinetic energy **K** (sometimes called capacity to do work) of any moving fluid, such as steam, gas, or water, is

$$K = \frac{WV^2}{2g},$$

where **W** is the weight of the fluid discharging per second, **V** is the velocity of flow in feet per second, and **g** is the acceleration of gravity or 32.2 feet per second.

By definition (in English units) one horsepower is equivalent to 550 foot-pounds per second.

Exercise 3. If the vessel shown in *Fig.* 33 discharges 40 pounds of water per second at a velocity of 161 feet per second, what is the force (impulse) pushing the wooden block away from the vessel? *Ans.* 200 pounds.

Also what is the force (reaction) pushing the vessel itself toward the left? *Ans.* 200 lbs.

Exercise 4. If water is discharged against flat blades of a water wheel made up of vanes similar to the block shown in *Fig.* 33 (page 62) at the rate of 3.22 pounds per second at a velocity of 2000 feet per second and is spattered from the wooden blocks with a "residual" velocity (leaving the vanes) of 300 feet per second, what horsepower is this water wheel capable of developing? *Ans.* 195,500 foot-pounds per second or 355.5 horsepower.

Exercise 5. Steam of the same density as in the exercise at the bottom of page 66 discharges at the rate of 1739 pounds per hour and produces a reaction against the plate into which the same nozzle is inserted of 45 pounds. What is the velocity of discharge? *Ans.* 3000 feet per second.

Exercise 6. The area of a nozzle at its smallest section is .72 square inch and *discharges* steam at the rate of .2 pound per second, of which the specific volume is 2.0 cubic feet per pound.

(*a*) What is the velocity of flow? *Ans.* 80 feet per second.

(*b*) What is the magnitude of the force developed by the reaction of this jet? *Ans.* ½ pound (nearly).

(*c*) What is the maximum value of the impulse produced by this jet if friction and eddy losses reduce the velocity effective for giving the impulse by 25 per cent.? *Ans.* .37 pound.

(*d*) If only part of the velocity available in (*c*) is absorbed in driving a steam turbine, so that the steam leaves the blades with a "residual" velocity of 10 feet per second, how many foot-pounds of work per *minute* are developed by the turbine? *Ans.* 652.

(*e*) What is the horsepower equivalent of this number of foot-pounds per minute? *Ans.* .0198 horsepower.

(*f*) If this turbine drives a small electric generator having an efficiency of 80 per cent., what power in kilowatts will this generator develop? *Ans.* .0119 kilowatt.

Suggestion: A kilowatt is a thousand watts, and 746 watts are equivalent to a horsepower.

(*g*) How much horsepower would be developed by this turbine if all the velocity as calculated in (*a*) is transformed into work?

(*h*) What is the efficiency of the turbine?

Suggestion: Compare (*e*) and (*g*). If the velocity as calculated in (*a*) represents the total velocity equivalent of the available energy due to adiabatic expansion (constant entropy) then the answer to section (*h*) is called the *Rankine efficiency* of the turbine.

Exercise 7. Calculate the horsepower developed by a steam turbine having two rows of moving blades. Upon the first row steam is directed at a velocity of 3000 feet per second and at the rate of 1.771 pounds per second. The steam is discharged from this row at a velocity of 1000 feet per second and is then directed upon a second row of blades from which it is discharged at a velocity of 200 feet per second.

(*a*) Neglecting frictional and other losses, how much horsepower will this turbine develop? *Ans.* 448 horsepower.

(*b*) How much power would be developed if there is a loss of velocity of 10 per cent. in each row of blades?

Suggestion: Actual velocity effective in first row of blades is 2700 feet per second which is discharged at 1000 feet per second. Work developed in this row is $1.771\ (2700^2 - 1000^2) \div (64.4 \times 550)$ in horsepower. Similarly work done in the second row is $1.771\ (900^2 - 200^2) \div (64.4 \times 550)$ in horsepower.

(*c*) What is the efficiency of the complete turbine when the losses stated are considered?

Suggestion: Efficiency is total horsepower calculated in (*b*) divided by that found by considering only initial velocity (3000 feet per second) as in (*g*) of Exercise 6.

Exercise 8. (Use of entropy-total heat chart.)

Steam at an initial condition of 165 pounds per square inch absolute and 100 degrees Fahrenheit superheat is expanded in a nozzle *adiabatically* to 20 pounds per square inch absolute pressure.

(*a*) How much energy (in B.T.U. per pound) is converted into velocity?

(*b*) If no losses are considered, what is the velocity in feet per second of the discharging jet?

(*c*) If there are losses equivalent to 4 per cent. of the energy available, what is the actual velocity of the jet?

(*d*) If the losses are equivalent to 2 per cent. of the theoretical velocity, what is the actual velocity of the jet?

Exercise 9. Steam at the same initial and final conditions as in Exercise 8 is reheated by friction in the nozzles and blades so that the entropy at the final condition is 1.7. How much energy is available for doing work?

Suggestion: Reading from the entropy-total heat chart, the total heat contents of a pound of steam at the initial condition is 1252 B.T.U. and at the final condition after reheating is 1135 B.T.U. (expansion is not adiabatic). Therefore, heat units available for work = 1252 − 1135 or 117 B.T.U.

Exercise 10. A certain steam turbine having several stages takes steam initially at 165 pounds per square inch absolute and 100 degrees F. superheat and expands it to 20 pounds per square inch absolute in the first stage. Friction and the transformation of residual velocity into potential (heat) energy returns 30 per cent. of the available energy in an adiabatic expansion back to the steam by "reheating" at the final pressure. If now in the nozzles of a succeeding stage of the turbine the steam is expanded to 10 pounds per square inch absolute and reheated again by the same percentage at the latter pressure, how much energy (B.T.U.) is available in each stage for performing work? What is the quality of the steam after each reheating?

Suggestion: In the normal *adiabatic* expansion from 165 pounds per square inch absolute and 100 degrees F. superheat to 20 pounds per square inch absolute the available energy is 1252 − 1085 or 167 B.T.U., of which 30 per cent. or 50.1 B.T.U. go to reheat the steam. The total heat contents of a pound of steam after reheating becomes then 1085 + 50.1 or 1135.1 B.T.U. For the second stage the expansion is from 20 pounds per square inch absolute pressure and a total heat contents of 1135.1 B.T.U. (quality about .978) to 10 pounds per square inch absolute, making the

available energy for adiabatic expansion 1135.1 — 1087 or 48.1 B.T.U. per pound. The reheating is 30 per cent. of this or about 14.3 B.T.U., which when added to 1087 gives 1101.3 B.T.U. as the total heat contents of the steam when passing into the nozzles of the next succeeding stage. At this condition the quality of the steam is about .958.

In actual designing the reheating in the last stage is not considered available, as will be observed in the design worked out on page 105. The reason for this is that a very large part of the reheating in the stages other than the last is due to the changing of the residual velocity of the steam as it leaves the blades into potential (heat) energy. This has been demonstrated by actual experiments which show that the steam enters the nozzle of an impulse wheel in every stage with practically negligible velocity. In the last stage the conditions, however, are different. The steam here leaves the blade with its residual velocity unchecked and passes off into the large exhaust passages provided for its unimpeded flow.

Exercise 11. A turbine blade like the one shown in Fig. 43 moves with a velocity of 500 feet per second due to a steam jet passing over it which has a velocity of 3220 feet per second. If friction losses in the blade are not considered, and the weight of steam flowing per second is 1.0642 pounds, α is 20 degrees and $\beta = \gamma = 45$ degrees, what is the total impulse force to which the blade is subjected in the direction of its motion (see page 76)?

Suggestion: Since losses in the blades are neglected $V_{r3} = V_{r2}$ and $V_{r2} = \sqrt{V_b^2 + V_2^2 - 2\,V_b V_2 \cos\alpha}$ (Law of Cosines).

All the terms in this equation are known so that V_{r2} or V_{r3} can be calculated.

Exercise 12. Taking the necessary data from the preceding exercise, state the proper angle for the backs of the blades (see Figs. 49 and 50), for the steam to enter without loss due to impact and eddying. (See page 77.)

Exercise 13. Explain the essential principle of operation of Hero's engine. Indicate clearly in a figure the direction of rotation of this engine with respect to the direction of steam discharge from the nozzles. What is the difference in principle between Hero's engine and Branca's?

Exercise 14. Explain the actual difference between the commercial types known as impulse and reaction turbines.

Exercise 15. Why have the stationary blades or buckets shown in figures like 39, page 70, a curvature in the opposite direction to that of all the moving blades?

Exercise 16. Why is the rotation loss when stated in per cent. of rated output less for a large size turbine than for a relatively small one?

Exercise 17. Design a nozzle, showing all the important dimensions, for expanding steam from the initial condition of 165 pounds per square

inch absolute, and 100 degrees F. superheat to a final condition of 4 pounds per square inch absolute. Assume that the nozzle loss is 3 per cent. of the velocity and that the rate of flow is to be $\frac{2}{10}$ pound per second. (See pages 111–113.)

Exercise 18. Dry steam expands in the nozzles of a simple impulse turbine from 165 pounds per square inch absolute to 1 pound per square inch absolute (about 28 inches vacuum). Draw velocity diagrams, allowing for no losses, and determine the proper blade angles when β equals γ. The nozzle angle is to be, as usual, 20 degrees and the peripheral speed of the blades or buckets is 1200 feet per second.

Calculate the energy absorbed or given up to the blades or buckets per pound of steam as well as the steam consumption of the ideal turbine (theoretical water rate) and the steam consumption of this turbine as determined from the energy absorbed by the blades or buckets.

Sketch with a reasonable degree of accuracy the outlines of the blades or buckets.

Exercise 19. Recalculate and redesign the blades for the conditions given in Exercise 18 when the nozzle loss is 3 per cent. of the theoretical velocity developed and the blade losses are obtained from Fig. 51, page 103.

Observe and discuss the change in blade angles caused by including the losses in the design.

Calculate (1) the work done in foot-pounds per second per pound of steam; (2) the steam consumption per horsepower-hour and the efficiency of the turbine.

If the speed of the turbine is 20,000 revolutions per minute, find the diameter of the mean blade circle.

If five nozzles are used for a maximum load of 50 horsepower, find the diameter at the throat of each of these nozzles, assuming they are all of the same size.

Exercise 20. Make the necessary calculations and draw velocity diagrams and neat sketches of the blades for an impulse turbine having two pressure stages and two rows of moving blades, that is, two velocity stages in each pressure stage, for the following requirements:

The initial pressure of the steam supplied to the turbine is 165 pounds per square inch absolute and is expanded in the first set of nozzles to 20 pounds per square inch absolute. In the second set of nozzles the pressure falls from 20 pounds per square inch absolute to 2 pounds per square inch absolute (about 26 inches vacuum). The nozzle angles are 20 degrees and the peripheral speed of the blades or buckets is 500 feet per second, the nozzle loss is 2 per cent. of the theoretical velocity, and the blade losses are to be taken from Fig. 51. Assume that the windage, leakage, and bearing losses amount to 30 per cent. of the energy developed by the action of the steam in the blades. Steam is initially superheated 100 degrees Fahrenheit.

The rating of the turbine is to be for 100 horsepower at 1800 r.p.m. Calculate the number of buckets and the height of the buckets for the first row in the first stage and for the last row in the second stage.

Observe that the height of the blades for the first row in each stage is determined by the height of the nozzles which discharge into the blades.

Exercise 21. Design the blading of a reaction turbine for the same conditions as the design calculations on page 544, except that the initial steam pressure is to be 175 pounds per square inch absolute, and the final pressure ½ pound per square inch absolute.

Exercise 22. Design a combined impulse and reaction turbine, taking the general data the same as for the preceding exercise and the expansion in the impulse section to be from 175 pounds per square inch absolute to 40 pounds per square inch absolute. The expansion in the reaction blading is to be from 40 pounds per square inch absolute to ½ pound per square inch absolute.

Sketch the blades for the impulse section, assuming there are two velocity stages, and also the blades for the first and last stages in the "reaction section."

Exercise 23. Determine the velocity loss in feet per second in a nozzle having 98 per cent. efficiency at its *proper expansion*, which is from 125 pounds per square inch absolute pressure to 28 inches vacuum (referred to 30 inches barometer) when used for

(1) 165 pounds per square inch absolute and 29 inches vacuum.

(2) 9 pounds per square inch absolute and 26 inches vacuum.

State also the corresponding energy loss in B.T.U. per pound of steam in each case, and by what percentage the efficiency of the Rankine cycle will be affected. In all cases mentioned the steam is initially dry saturated.

Exercise 24. In a steam turbine of the type which is governed by a system of cutting out or closing nozzles rather than by reducing the pressure of steam (throttling), calculate the number of nozzles that will be open in this turbine for discharging steam at light load for the following conditions:

Steam pressure	140 lbs. per sq. in. abs.
Vacuum (referred to 30-in. barometer)	26.6 ins. of mercury
Moisture in steam	2.0 per cent.
Steam used by turbine per hour	720.0 lbs.
Area of each nozzle	0.0243 sq. in. (diam. 0.176 in.)

Actual observations of vacuum as made with a gage or mercury column are corrected to equivalent vacuum compared to (or "referred to") 30-inch barometer by adding to the observed vacuum the difference between the

corrected barometer reading and 30-inches when the barometer is less than 30 inches. Similarly, the difference as above is *subtracted* when the barometer is greater than 30 inches.

Exercise 25. Calculate the flow of steam (pounds per hour) through the total area of the nozzles operating in the preceding exercise if the steam supplied is superheated 100° F. instead of being 2.0 per cent. wet.

Exercise 26. Construct in plan view two impulse steam turbine blades, having given the following data: —

(*a*) Pitch ..... $\frac{3}{4}$ inch
(*b*) Width ..... 1 inch
(*c*) Angle ($\beta = \gamma$) ..... 30°

Exercise 27. Given the following data, compute the height of the blades of the turbine wheel of which they are a part: —

(*a*) Mean blade diameter ..... 2.65 feet
(*b*) Angle β ..... 30°
(*c*) Area of total nozzle mouths ..... 3.5 sq. ins.
(*d*) Consider length of the areas represented by the total area, as in Fig. 48, namely, $2 \times \frac{1}{4}\pi D$.

Exercise 28. Taking from page 105 the following data, we have pressure of steam entering the second stage nozzle is 35 pounds per square inch absolute; quality of steam entering the second stage nozzle is 0.985; pressure of steam leaving the second stage nozzle is 27 pounds per square inch absolute; also taking from page 110 the 1.52 pounds of steam used per second, use Grashof's formula together with proper cross-section curves, and assuming twelve nozzles in the diaphragm between the first and second pressure stages, calculate the following: —

(*a*) The area A_0 at the throat of the second stage nozzle.

(*b*) Considering an orifice of square cross section at the throat, what is the length of one side?

(*c*) On a basis of the foregoing assumptions and using the chart on page 49, what is the area at the mouth? What is the value of the dimension y for this nozzle? (See Fig. 55.)

(*d*) What is the value of the dimension z (Fig. 55)?

Exercise 29. Consider a station equipped with an engine and electric generator of 5000 kilowatt rating. It is proposed to operate at a load 50 per cent. greater than the rated load. The steam consumption of the engine at 50 per cent overload is 19 pounds per kilowatt per hour.

A turbine of 5000 kilowatt rating is suggested instead. At 50 per cent. overload its steam consumption is 15.4 pounds per kilowatt per hour.

NOTE. — This example refers to curves in Fig. 79. Observe the statement in the first paragraph on page 198.

(*a*) What is the difference in steam consumption of the two machines at the 50 per cent. overload conditions? Considering operation for 24 hours per day for 300 days in a year and with steam costing 16 cents for 1000 pounds, what would be the saving accomplished per year by replacing the engine by the turbine?

(*b*) If the engine were sold as second hand for $5000 and the turbine cost, installed, $22 per rated kilowatt, in what time would the saving in steam consumption pay for the turbine?

(*c*) Considering that every additional 34.5 pounds of steam ("from and at 212° F.") used means one extra boiler horsepower, how much more steam capacity (expressed in terms of boiler horsepower) would be required to supply the engine than the turbine at 50 per cent. overload?

(*d*) If two 400 horsepower boilers costing $13 per horsepower could be omitted by installing the turbine, what would be the yearly profit due to saving the interest on the cost of the boilers in addition to the saving on the cost of steam, allowing interest at 6 per cent.

Exercise 30. Referring to Fig. 91a, if the steam consumption of a De Laval turbine were 25 pounds per kilowatt per hour, what would it be if the steam were superheated 20°, 60°, 150°, 190° F.? For the same interval of 40 degrees under low and high superheat conditions which range, that is between 20° and 60° F. or between 150° and 190° F., produces the greater *reduction* in steam consumption?

Exercise 31. Referring to Fig. 91b, suppose the steam consumption of a De Laval turbine operating under no vacuum conditions were 45 pounds per kilowatt per hour, what would it be if operated with vacuums of 9 inches, 19 inches, and 28 inches? In each case which range of 9 inches, that is, between 0 and 9 inches or between 19 and 28 inches produces the greater improvement in steam economy?

Exercise 32. How are the difficulties as to the critical speed of the shaft of a Parsons turbine met?

Exercise 33. In designing for the blade speeds in a steam turbine, why is not the total pressure drop divided by the number of stages? Instead of designing for a uniform pressure drop throughout the stages, what other important feature is it considered better to have approximately constant in a given section?

Exercise 34. Considering in Fig. 105 the lines plotted for condensing performances, what causes the upward turn beginning at about 15 per cent. overload?

Exercise 35. (*a*) In Fig. 106 the improvement in steam consumption per inch of vacuum is shown. How many degrees of superheat added to "dry" steam would produce the same amount of saving as to steam consumption as by increasing the vacuum from 27 to 28 inches?

(*b*) Why is the nozzle block in the "double flow" Westinghouse turbine made quite separate from the turbine casing?

(*c*) What are the advantages and disadvantages of the "double flow" type of reaction turbine and why is not this type used for sizes below 5000 kilowatt rating?

(*d*) What type of turbine is shown in Figs. 112 (c) and 112 (d)? What type of turbine is used for the high pressure element in the turbine sets shown in Figs. 112 (e) and 112 (f)?

(*e*) On what two factors does the choice of the arrangements shown on pages 248 and 249 depend?

(*f*) In the following table fill in under each column in its proper space the letters D. F. for "double flow" and C. C. for "cross compound," in accordance with the description on pages 247–253.

Type of Turbine.	Cheaper Construction.	More Costly to Construct and Install.	More Floor Area Required.	More Economical in Operation.
Double flow.....				
Cross compound.....				

Exercise 36. What advantages has the Westinghouse impulse turbine over the De Laval and Curtis types?

Exercise 37. (*a*) In what way does the Rateau turbine differ from the Curtis turbine as to velocity stages?

(*b*) How is increase in nozzle area accomplished in the diaphragms of the Rateau turbine shown on page 279?

Exercise 38. Referring to Fig. 161, what is the steam consumption per kilowatt per hour at full load (600 kilowatts)? What per cent. increase is there at half load in steam consumption per kilowatt per hour over that at full load?

(*a*) When throttling?

(*b*) When not throttling?

Exercise 39. A De Laval turbine operates with steam with 2 per cent. moisture entering the nozzles at 165 pounds per square inch absolute and discharges into the wheel casing at 1 pound per square inch absolute. Allowing 3 per cent. loss in velocity due to friction, what would be the velocity of the jet as it impinges on the blades? If then valve (*T*) in Fig. 162 were to open, how would the valve shown in Fig. 163 act? Suppose now that while valve (*T*) is open, the valve in Fig. 163 throttles the

steam down to 100 pounds per square inch absolute, changing the pressure but not the total heat per pound of steam. With the help of the total heat-entropy chart and the velocity scale, determine the velocity of the steam impinging on the blades under the new throttled condition with the valve (*T*) open, after allowing for friction loss in the nozzle at the same percentage as given above. What will be the effect upon the speed of the wheel due to the change in steam velocity?

Exercise 40. What are the objections to controlling the admission of steam to each stage of Curtis or Rateau turbine of several stages?

Exercise 41. Change the paragraph beginning at the bottom of page 311 to read "Assume the load on the turbine has been decreased and the speed has increased, indicating that less steam is needed," etc., follow on, using the same letters of that paragraph referring to Figs. 165, 166, and 167, and describe the action of the governing mechanism under these decreased load and increased speed conditions.

Exercise 42. In a Parsons turbine governed by the "blast" system there is a continuous flow of steam at the rate of three pounds per second when the valves are wide open. Under this condition the pressure in the turbine casing is 170 pounds per square inch absolute. The governor mechanism operates and the pressure in the casing falls to 100 pounds per square inch absolute. The time required for the pressure in the casing to drop from 170 to 100 pounds per square inch absolute (as obtained approximately from the curve Fig. 174) is 0.19 seconds. Determine the weight of steam entrapped in the casing during this interval of time.

Exercise 43. (*a*) In order that overload conditions may be met more satisfactorily, how and to what points of the turbine casing is live boiler steam admitted?

(*b*) Suppose a turbine rated at 5000 kilowatts, when operated at 25 per cent. overload, requires 92,000 pounds of steam per hour, but takes this steam without the overload or by-pass valve opening; and suppose the guaranteed steam consumption at full rated load is 75,500 pounds per hour — then, taking the Westinghouse-Parsons 5000 kilowatt turbine listed in the table at the bottom of page 337, write in tabular form the steam consumptions per kilowatt per hour, at $\frac{1}{2}$, $\frac{3}{4}$, full, and $1\frac{1}{4}$ load conditions, considering the full load consumption given above, as 100 per cent. Also in the same table beneath these steam consumptions per kilowatt hour, write the total steam consumption per hour.

(*c*) By designating this turbine to take this 25 per cent. overload with the by-pass valve open, at what point of its output will the steam consumption be lowest, and should not this overload rating be really called the full load rating?

Exercise 44. Under what conditions as to exhaust pressure and speed is a reciprocating engine somewhat more economical than a turbine?

Exercise 45. Lay off on a sheet of cross-section paper according to scale here stated, the values of the table at top of page 342. Use a long side of the cross-section paper as the bottom or lower edge of sheet, thus the short sides will form the left and right-hand edges. From the lower left-hand corner measure 1 inch toward the right and 1 inch up, and here establish the zero point for the plotting. Draw through this origin or zero point a horizontal and a vertical line (parallel to the edges of the paper).

Lay off on the horizontal axis, from the origin at the intersection of the axes, 4, 8, 12, 16, 20, and 24, using a scale of 1 inch to every 4 units and write beneath this axis "pressure of steam at turbine admission valve in inches of vacuum."

Lay off on the vertical axis at the left a scale having each quarter inch division equivalent to one unit, beginning the scale at the origin which is to be marked "20." Write along this axis "per cent. in output gained over output of engine when worked with high vacuum, the turbine exhausting into a vacuum of $28\frac{1}{2}$ inches."

Plot the percentages in the table on page 342 as ordinates against their corresponding values of vacuum.

Exercise 46. On a basis of the foregoing plotting, between what values of absolute vacuum is the best output obtained?

Exercise 47. (*a*) A compound reciprocating engine takes dry steam at 165 pounds per square inch absolute and exhausts into a condenser maintaining a 26-inch vacuum. Under these conditions its full load rating is 1500 horsepower and its steam consumption is 15 pounds per horsepower per hour. What is the total steam consumption per hour?

Ans. 22,500 lbs.

(*b*) What is the steam consumption per kilowatt per hour, assuming that the 1500 horsepower delivers 1000 kilowatts to the electric power lines?

Ans. 22.5 lbs.

(*c*) It is contemplated to install a low pressure turbine to take steam from an engine at 16 pounds per square inch absolute. The engine valves will be reset so that when taking dry steam at 165 pounds per square inch absolute (1 pound gauge), the engine will require 18 pounds of steam per indicated horsepower per hour. How much total steam will be required by the engine per hour if the indicated horsepower of the engine is 1500?

Ans. 27,000 lbs.

(*d*) Suppose that when steam exhausts from the engine 10 per cent. is lost as moisture of condensation, how much steam should be supplied to the engine in order that 27,000 pounds net may be exhausted from the engine to the turbine? *Ans.* 30,000 lbs.

(*e*) Considering a steam consumption of 18 pounds indicated horse-

power per hour, what would be the indicated horsepower of the engine when receiving this 30,000 pounds of steam per hour?

Ans. 1666 I.H.P.

(*f*) If 66.6 per cent. of this 1666 indicated horsepower represents the electrical power delivered to the power lines, what is its numerical value?

Ans. 1110 kilowatts.

(*g*) A low pressure turbine, installed to take this 27,000 pounds of steam per hour, uses 33.75 pounds per kilowatt per hour as measured at the power lines when exhausting into a vacuum of 28 inches. How much power in kilowatt-hours would be generated on a basis of this steam consumption?

Ans. 800 kilowatts.

(*h*) What would be the combined output of the engine and turbine set in kilowatts? *Ans.* 1910 kilowatts.

(*i*) What would be the steam consumption per kilowatt per hour of the combined set considering the steam supplied to the engine and the total output of the set in kilowatts? *Ans.* 15.7 lbs. per kilowatt per hour.

(*j*) Consider that this 15.7 pounds of steam is increased to 18 pounds per kilowatt per hour because of the extra amount of steam required for the auxiliary machinery above that required by the auxiliaries used when the engine operated alone at about 26 inches of vacuum. What is the saving in steam consumption per kilowatt per hour of the engine-turbine set as compared with that which existed when the engine operated alone?

Ans. 4.5 lbs. per kilowatt per hour.

(*k*) If originally the engine generated 1000 kilowatts per hour and now 4.5 pounds per kilowatt per hour is saved, how much steam is saved per year when generating 1000 kilowatts continuously for 300 days of 24 hours each? *Ans.* 32,400,000 lbs.

(*l*) If steam costs 17 cents for 1000 pounds leaving the boiler, how much money is saved per year on the 1000 kilowatts generated?

Ans. $5508.00.

(*m*) Assume the 800 kilowatt turbine costs $20 per kilowatt installed on foundations including exciter and switchboard. Assume also that the condenser with auxiliaries, together with intake and discharge pipes costs installed $12 per kilowatt of the rating of the turbine. The steam separator between the engine and turbine, together with extra valves and connective piping, cost $1000. What would be the entire cost of the installation if 10 per cent. of the sum of the foregoing costs were set aside in addition for engineering services and "extras." *Ans.* $29,260.00.

(*n*) The engine and turbine in combination generate 1910 kilowatts as against 1000 kilowatts when the engine operates alone, thus increasing the output by 910 kilowatts. It costs $\frac{1}{2}$ cent per kilowatt-hour to generate this additional output which can be sold to yield a profit of $\frac{1}{2}$ cent per kilo-

watt-hour, what will be the profit on this extra output for a year of 300 days for continuous "24-hour" operation? *Ans.* $32,760.00.

(*o*) What is the total income per year due to the saving of steam on the 1000 kilowatts of the original output (as generated by the engine alone), plus the profit on the extra output of 910 kilowatts by the engine-turbine set? *Ans.* $38,268.00 per year.

(*p*) In approximately how many months would the new installation pay for itself? *Ans.* 9 months (nearly).

(*q*) What amount of money invested at 5 per cent. would yield this $41,083 per year? *Ans.* $765,000.00.

Exercise 48. When one low pressure turbine is being supplied exhaust steam by several reciprocating engines, what precaution is necessary in starting up one of these engines? What detrimental effect is liable to occur?

Exercise 49. (*a*) In what cases is it inadvisable to utilize exhaust steam for power generation in low pressure turbines?

(*b*) In an average steam engine plant what proportion of the exhaust steam is necessary for feed water heating, and what proportion is available for other uses?

Exercise 50. Considering the arrangement shown in Fig. 181e, describe the effect on the various parts of that set according to the following progressive steps when the load on the Direct Current line greatly increases.

(*a*) How does this affect the speed of the engine?

(*b*) How does the engine governor act, and with what result as to amount of steam admitted to the turbine?

(*c*) How does this change in steam supply to the turbine affect its alternating-current output?

(*d*) If the load on the A. C. line is such that no more current is necessary in that direction, how will the turbine-generator output be utilized?

(*e*) In what way will the engine be assisted in handling the overload D. C. conditions referred to in item (*a*) of this question?

Exercise 51. Considering the Fig. 181g describe the effect on the various parts of that set according to the following progressive steps when the load on the alternating-current line becomes less than normal.

(*a*) How will the output from the turbine-generator be fully utilized if the A. C. line required less than the normal amount of current?

(*b*) How will this act upon the load on the line shaft?

(*c*) What effect will this have upon the engine effort?

(*d*) What will be the governor action and how will this action affect the supply of steam to the turbine?

(*e*) How will this affect the turbine speed and its output?

(*f*) The synchronous motor now comes to what operating condition?

Exercise 52. (*a*) Draw free hand a reciprocating engine indicator diagram having the point of cut-off (*b*) about $\frac{1}{4}$ stroke, release 14 pounds per square inch absolute, pressure in exhaust line to the low pressure turbine 16 pounds per square inch absolute.

(*b*) Extend the point of cut-off (*a*) at the same pressure so that cut-off will occur at $\frac{1}{3}$ stroke. Let the expansion line run practically parallel to the expansion line of the preceding item, and let the pressure in the exhaust line to the low pressure turbine be 16 pounds per square inch as before.

(*c*) Discuss the effect of this change in the diagram and its relation to the work it represents in a manner similar to the discussion on pages 316 and 318.

Exercise 53. Draw free hand, and label, indicator diagrams with atmospheric pressure line shown to represent the description taken up in the second paragraph of page 346 and extending on at the top of page 347, viz:

(*a*) For an engine designed to operate both condensing and non-condensing. Sketch the indicator diagram to represent the engine operating condensing, but with the pressure of the release point high enough to permit of a drop in pressure if the engine were to be changed to exhaust into the atmosphere.

(*b*) For the same engine when it is exhausting its steam to a low pressure turbine taking steam at about atmospheric pressure.

(*c*) For the same engine exhausting to the low pressure turbine but with the cut-off occurring much earlier than in the preceding cases, thus admitting less steam to the engine cylinder with a consequent reduction of pressure at release. If the engine were to exhaust to the atmosphere a loop would occur in the indicator diagram, but since it exhausts into the intermediate receiving line to the turbine, the passage of steam will be from release pressure in the engine cylinder to a slightly lower pressure, and no looping of the indicator diagram will occur, because although the turbine was previously operating in item (*b*) at an inlet pressure about atmospheric, its inlet pressure now automatically drops to correspond to the smaller allowance of steam permitted by the earlier engine cut-off. In sketching this indicator diagram make clear the difference between this case (*c*) and case (*b*) by reference to the atmospheric pressure line.

Exercise 54. What is the essential difference between the methods used in the Westinghouse Parsons type of bleeder turbine and in the Curtis bleeder turbine, as to steam pressure control in the stage from which steam is extracted?

Exercise 55. Make a simple free hand sketch (using crosses for valves and omitting bearings and other parts irrelevant to the question) of the rotor, blading and steam passages of Fig. 185c and draw a continuous line

showing the path of the steam as it progresses from the inlet valve to the exhaust outlet.

Exercise 56. Taking the following data from the last line of the 300 horsepower De Laval Turbine table on page 398, and using the form of itemization on page 402, entitled "Thermal Efficiency of a 400-Kilowatt Turbine," work out a similar form embodying in it the corresponding items for the 300 horsepower De Laval turbine above referred to.

The data: —

Brake horsepower	352 B.H.P.
Steam pressure absolute	213 lbs. per sq. in.
Superheat	84° F.
Vacuum	27.2 inches or 1.4 lbs. per sq. in. abs.
Assume the mechanical efficiency of a corresponding reciprocating engine as	93.3%
Total steam used per hour	4910 lbs.

Exercise 57. (*a*) From the water rate curves of Fig. 191 determine the steam consumption per brake horsepower per hour for a 250-kilowatt load ($\frac{1}{2}$) and 28 inches vacuum. Determine the same for 250 kilowatts and 25 inches vacuum. What is the saving in steam consumption?

(*b*) Determine similarly the saving when operating at full load and 28 inches vacuum as against operation at full load and a 25 inches vacuum.

(*c*) Upon noting the rating of the turbine, 500 kilowatts, what vacuum at full load condition will produce the same steam consumption as that shown for 29 inches vacuum and $\frac{1}{2}$ load?

Exercise 58. In the preceding question a change in vacuum produced the greater effect, upon which load, the full rated load or the under rating load?

Exercise 59. Why is it that if a steam turbine has a different steam consumption at the speed for which it is rated than that for which it was designed, a change in the blade angles, or a change in the pressure, is necessary in order to cause the rated steam consumption and corresponding rated speed to match, as was intended in the original design?

Exercise 60. (*a*) How does the average of the equivalent steam consumption per brake horsepower per hour for the De Laval turbines (*G*) and (*A*) in the table on page 419 compare with the last two engines in the table on page 420? Reduce these last two engines to the same "Equivalent Steam Consumption per brake horsepower per hour" as is stated in the tables on pages 419 and 420, using 94 per cent as the mechanical efficiency of the "Erie-Lentz" engine. In the case of the Buckeye compound the brake horsepower is 126.6. Use the corrections stated in the paragraph at the foot of page 380, except for the Erie-Lentz engine change in vacuum, in which case use .2 per cent. for each inch of vacuum change from 0 to 28

inches. How much difference exists and is it in favor of the engines or the turbines?

Exercise 61. Determine from the curve of Fig. 193 the cost of a 4000 kilowatt alternating current turbine-generator. From the "double dagger" foot note at bottom of page 425 take the higher cost per kilowatt for foundations of turbine-generators, and ascertain the cost of a foundation for this turbine. What is the cost per kilowatt of the turbine-generator installed on foundations, allowing 15 per cent. in addition to the costs already figured for the labor and extra expenses of placing the machine and connecting it up?

Exercise 62. Taking the figures of the various authorities quoted in the table of page 427 as to the depreciation of steam engines, what would you consider the average useful life of steam engines? On a basis of your decision, what per cent. of the original cost of the engine should be laid aside yearly at 5 per cent. compound interest in order to replace the old engine with a new one at the end of that period? The following formula may be used:

(*d*) the amount to be laid aside yearly: —

$$d = \frac{100\,r}{(1+r)^n - 1}$$

where,

d = rate of depreciation in per cent. of first cost, or the amount to be laid aside yearly.

r = rate of interest, expressed in cents on a dollar.

n = the assumed life of the apparatus in years.

APPENDIX B.

CALCULATIONS FOR DESIGN OF REACTION TURBINE.

The following calculations are for the design of a 300-horsepower (maximum output) reaction turbine of the Parsons type with fifty stages. Initial steam pressure is 165 pounds per square inch absolute at 100° F. superheat, and the exhaust pressure is 1 pound per square inch absolute. Blade speed is 500 feet per second. The blade losses are to be taken from the curve on page 103.

Total heat at initial pressure (H_1) = 1252 B.t.u. per pound.
Total heat at final pressure (H_2) = 945 B.t.u. per pound.
Available energy ($H_1 - H_2$) = 307 B.t.u. per pound.
Coefficient "C", Fig. 55c (page 124) = 50,000; eff. ratio = .60.
Uncorrected theoretical weight of steam = $300 \times 550 \div (778 \times 307) = .692$ pound per second.
Percentage correction for superheat = 6.
Corrected theoretical weight of steam = $.692 \times (1.00 - .06) = .650$ pound per second.
Amount of steam corrected for eff. ratio = $.65 \div .60 = 1.082$ pounds per second.
Specific volume of steam at initial conditions = 3.21 cu. ft. per pound.
Initial volume of steam = $1.082 \times 3.21 = 3.47$ cu. ft. per second.
$NV_b^2 = 2{,}000{,}000$ (page 119).

Values of Blade Speed (V_b).

High-pressure drum, 120 ft. per second.
Intermediate-pressure drum $120 \times \sqrt{2} = 170$ ft. per second.
Low-pressure drum $170 \times \sqrt{2} = 240$ ft. per second.

Number of Rows of Moving Blades.

High-pressure drum = $(2{,}000{,}000 \div (120)^2)^{\frac{1}{2}} = 34.75$
Intermediate-pressure drum = $(2{,}000{,}000 \div (170)^2)^{\frac{1}{2}} = 17.3$
Low-pressure drum = $(2{,}000{,}000 \div (240)^2)^{\frac{1}{2}} = 17.4$ (see page 129)
Total number of rows of moving blades..... 69.4

Adjusting Total Rows of Moving Blades to 50 as Required.

High-pressure drum, $34.75(50 \div 69.4) = 25$
Intermediate-pressure drum, $17.3(50 \div 69.4) = 12$
Low-pressure drum, $17.4(50 \div 69.4) = 13$
Adjusted total number of rows of moving blades 50
Since the efficiency ratio is .60, the total reheating factor is .40.
Total energy from reheating = .40 × total available energy = $.40 \times 307 = 122.8$ B.t.u. per pound.

Total energy at the final conditions including reheating = 945 + 123 = 1068 B.t.u. per pound.
Final entropy = 1.838.
Final quality of steam = .953.
Specific volume of dry steam at final pressure = 173.5 cu. ft. per pound.
Specific volume of steam at final conditions = 173.5 × .953 = 165.5 cu. ft. per pound.
Total expansion ratio = 165.5 ÷ 3.21 = 51.6.
Expansion ratio high-pressure drum = $\sqrt[4]{51.6}$ = 2.68.
Expansion ratio intermediate-pressure drum = $\sqrt[4]{51.6}$ = 2.68.
Expansion ratio low-pressure drum = $\sqrt{51.6}$ = 7.18.
Total expansion ratio = $\sqrt[4]{51.6} \times \sqrt[4]{51.6} \times \sqrt{51.6}$ = 2.68 × 2.68 × 7.18 = 51.6. (check)
Volume of flow of steam at exhaust end = 165.5 × 1.082 = 179 cu. ft. per second.
Useful energy* = 307 × .60 = 184.2 B.t.u. per pound.
Reheat (total) = 122.8 B.t.u. per pound.
Total available energy = 307.0 B.t.u. per pound. (check)

Energy Distribution.

	B.t.u. per pound per stage	Stages	Total
High-pressure drum	1.842	25	46.2
Intermediate-pressure drum	1.842×2=3.684	12	44.2
Low-pressure drum	3.684×2=7.378	13	96.1
Total useful energy as distributed (B.t.u. per pound)			186.5

Velocity Plan (same for all stages)

Useful energy per stage of high-pressure drum† = 184.2 ÷ (25 × 4) = 1.842 B.t.u. per pound.
V_b = 120 ft. per second.
For $\alpha = 20°$, $\sin \alpha = .3420$, $\cos \alpha = .9397$.
V_2 (angle $\beta = 90°$) = $V_b \div \cos \alpha$ = 120 ÷ .9397 = 127.9 ft. per second.
Take V_2 = 127.9 × 1.20 = 153.3 ft. per second (when angle β is slightly less than 90°).
Velocity coefficient (Fig. 51, page 103) = .98.
Theoretical value of V_2 = 153.3 ÷ .98 = 156.6 ft. per second.
Energy (E_2) in stationary blades = (156.6 ÷ 223.7)^2 = .492 B.t.u. per pound.
Energy (E_3) in moving blades = 1.842 − .492 = 1.350 B.t.u. per pound.
Total energy in Blades (E) = $E_2 + E_3$ (page 94) = 1.842 B.t.u. per pound. (check)

* Total available energy times efficiency ratio.
† For one-fourth of total work.

$V_2 \sin \alpha = 153.3 \times 0.342 = 52.5$ ft. per second.
$V_2 \cos \alpha - V_b = 153.3 \times .9397 - 120 = 24.0$ ft. per second.
$\tan \beta = \dfrac{V_2 \sin \alpha}{V_2 \cos \alpha - V_b} = \dfrac{52.5}{24.0} = 2.190, \quad \beta = 65^\circ 30'.$
$V_{r2}^2 = (52.5)^2 + (24.0)^2 = 3332.$
$V_{r2} = 57.7$ ft. per second.
Velocity coefficient (Fig. 51, page 103, curve A) = .990 (practically unity).
Energy of a row of moving blades, $E_3 = V_{r3}^2 - (57.7)^2 \div (2 \times 32.16 \times 778)$.
Theoretical $V_{r3}^2 = 2 \times 32.16 \times 778 \times 1.35 + (57.7)^2 = 70829$ (page 94).
Theoretical $V_{r3} = \sqrt{70829} = 266$ ft. per second.
Velocity coefficient (Fig. 51, page 103, curve B) = 0.965.
Take velocity coefficient $= \frac{1}{2}(.990 + .965) = \dfrac{1.955}{2} = .978.$
$V_{r3} = .978 \times 266 = 260$ ft. per second.
For $\gamma = 20^\circ \sin \gamma = 0.3420$ and $\cos \gamma = 0.9397$.
$V_{r3} \sin \gamma = 260 \times .3420 = 89$ ft. per second.
$V_{r3} \cos \gamma = V_b = 260 \times .9397 - 120 = 124$ ft. per second.
$\tan \omega = 89 \div 124 = .718, \ \omega = 35^\circ 42', \ \tan \omega = .7186.$
$V_3^2 = (89)^2 + (124)^2 = 7920, \quad V_3 = 153.0$ ft. per second.
Residual velocity loss in last stage $= \left(\dfrac{153.0}{223.7}\right)^2 = 0.469$ B.t.u. per pound.

Blade Heights.

Initial volume of steam $= v_0 = 3.47$ cu. ft. per second (as calculated).
Area $= v_0 \div V_2 \sin \alpha = (3.47 \div 52.5) \times 144 = 9.52$ square inches.
1st drum Diameter (d), $\dfrac{d}{12} \times 30 = 120$ (30 revolutions per second).
$d = \dfrac{120 \times 12}{30\pi} = \dfrac{48}{\pi} = 15.25$ inches (diameter).

Drum Diameters (ratio $\sqrt{2}$)

High-pressure drum	$= 15.25$ inches.
Intermediate-pressure drum	$= 21.60$ inches.
Low-pressure drum	$= 30.50$ inches.
1st row blade height of high-pressure drum	$= 9.52 \div (\pi \times 15.25) = .1975$ inch.
1st row blade height of intermediate-pressure drum	$= .1975 \times \dfrac{2.68^*}{\sqrt{2} \times \sqrt{2}} = .265$ inch.
1st row blade height of low-pressure drum	$= .265 \times \dfrac{2.68}{\sqrt{2} \times \sqrt{2}} = .355$ inch.

High-pressure stages in 5 "expansions," the expansion ratio of each $= \sqrt[5]{2.68} = 1.218$ = ratio of blade heights.

* Note that $\log 2.68 \div 5 = .4281 \div 5 = .08562 = \log 1.218$, and that 2.68 is the expansion ratio of the high- and intermediate-pressure sections. 7.18 is the expansion ratio for the low-pressure section. (See page 131.)

High-pressure Drum Groups

	Group Number.					Total Number of Moving Rows.
	1	2	3	4	5	
Blade height, in.....	.1975	.240	.293	.357	.435	
Number of moving rows per group.....	5	5	5	5	5	25

Intermediate-pressure drum divided into 4 "expansions," expansion ratio in each = $\sqrt[4]{2.68}$ = 1.28 = ratio of blade heights.

Intermediate-pressure Drum Groups

	Group Number.				Total Number of Moving Rows.
	1	2	3	4	
Blade height, in.....	.265	.340	.435	.557	
Number of moving rows per group.....	3	3	3	3	12

Low-pressure drum: 6 groups of 2 moving rows each + last moving row.
Expansion ratio: $\sqrt[13]{7.18}$ = 1.1635* = ratio of blade heights of each stage.
Combining into 6 groups of 2 each; ratio of height for group $(1.1635)^2$ = 1.354 = height of blades of last stage = .1975 × 51.6 × $\frac{1}{2}$ × $\frac{1}{2}$ = 2.55 inches.

Low-pressure Drum Groups

	Group Number.						Last Stage.	Total Number of Moving Rows.
	1	2	3	4	5	6		
Blade height, in.....	.355	.480	.650	.880	1.190	1.612	2.55	
Number of moving rows per group.....	2	2	2	2	2	2	1	13

* log. 718 ÷ 13 = 0.8561 ÷ 13 = 0.0658 = log 1.1635.

SUMMARY

(Blade heights in nearest $\frac{1}{16}$ inch)

High-pressure Drum

Mean diameter $15\frac{1}{4}$ inches

	Group Number.					Total Number of Moving Rows.
	1	2	3	4	5	
Height of blades, in..	$\frac{3}{16}$	$\frac{1}{4}$	$\frac{5}{16}$	$\frac{3}{8}$	$\frac{7}{16}$	
Number of moving rows per group.....	5	5	5	5	5	25

Intermediate-pressure Drum

Mean diameter $21\frac{5}{8}$ inches

	Group Number.				Total Number of Moving Rows.
	1	2	3	4	
Blade height, in.....	$\frac{1}{4}$	$\frac{3}{8}$	$\frac{7}{16}$	$\frac{9}{16}$	
Number of moving rows per group.....	3	3	3	3	12

Low-pressure Drum

Mean diameter $30\frac{1}{2}$ inches

	Group Number.							Total Number of Moving Rows.
	1	2	3	4	5	6	Last	
Blade height, in.....	$\frac{3}{8}$	$\frac{1}{2}$	$\frac{5}{8}$	$\frac{7}{8}$	$1\frac{3}{16}$	$1\frac{5}{8}$	$2\frac{9}{16}$	
Number of moving rows per group.....	2	2	2	2	2	2	1	13

Blade Angles (all stages)

ENTRANCE	EXIT
$\beta = 65° 30'$	$\alpha = 20°$
$\omega = 35° 42'$	$\gamma = 20°$

INDEX

PAGES

Absolute velocity 76
Accumulator 355
Adiabatic expansion 21–24
Adjustment bearing 222, 241
Airplanes, steam turbines for 199
Allis-Chalmers-Parsons turbines 233
  blades 227
  governor 322
  rotor 449
  shroud rings 228
Alternators, parallel operation 431
  with forced ventilation 526
Area of floor for engines and turbines 430, 434
  nozzles 36–49
Automobiles, steam turbines for 199
Auxiliary machinery, power for 428
Available energy 21–26
Axial clearance of blades 171
Balance pistons 131, 142, 160, 222, 241
Baumann blading 254
Bearing friction 110, 185, 210
  load on 290
Blades, clearances of 131, 169, 171
  conditions of best efficiency 77–98
  design of 99–171
  erosion of 174
  height of 100, 113, 138, 165
  impulse and reaction upon 62–66
  radial leakage of 135, 139, 163, 170, 185
  materials for 171
  peripheral speeds of 104, 128, 137, 204
  pitch of 100, 134
  rotation loss of 176
  speeds 115, 116, 129, 204
Bleeder steam turbines 369
Branca's turbine 5
British thermal unit 12
Brown-Boveri-Parsons turbine 233, 320, 333
Buckets (*see also* Blades) 258, 287, 297
By-pass governing 332
Carbon shaft packing 155, 157, 215
Centrifugal force 443

PAGES
Chart, entropy — total heat ..... 43–47, Appendix
Circulating water, quantity of 412, 428
Clearances of blades, axial 171
radial 131, 169, 171
Commercial testing of turbines 391
Comparison of turbines and engines 186, 197
Composition of blades 171
Condensing water, quantity of 412, 428
Condensers and auxiliaries, cost of 427
power for 428
Corrections for economy curves 186, 419
for rotation losses 178
for steam turbine tests 186
Cost of engines, turbines, and auxiliaries 425
maintenance and operation 423
Critical speed of rotating shafts 8, 207, 486
Curtis turbines 258–271, 310, 372
analysis of losses 272
blades 173, 261
diaphragms 258
emergency stop valve 266
governor 267, 312–317
nozzles 33, 50, 60, 260
speeds 263
steam consumption 193, 271, 394, 400, 401
step bearing 263
superheat corrections 193, 270
tests on 193–196, 394, 401
vacuum corrections 193, 270, 410
valve gear, electric type 310
hydraulic 313
mechanically operated 310
wheels 260, 262
Dake turbine 297
De Laval turbine 5–6, 200–217
analysis of losses 218
bearings 207
blades 173, 206
disks 202
gears 208
governor 210, 304, 329
nozzles 3, 33, 204
shaft 206
speeds of 204
steam consumption 218
superheat corrections 216

De Laval Turbine — *Continued* PAGES
tests on ... 398
vacuum corrections ... 217
wheels ... 202
Depreciation of power plants ... 427
Design of power stations ... 429
Design of turbines, examples in ... 104–140, 161–174, 544
entropy-heat diagram applied to ... 105
of blades ... 99–105
of steam nozzles ... 36–61
Deterioration of turbines and auxiliaries ... 427
Diaphragm Packing ... 158
Diaphragms ... 99, 159, 258, 277
Disk rotation losses ... 177
stresses in ... 452–486
Drums, stresses in ... 447–451, 485
Dummy pistons ... 131, 142, 160, 222, 241
Economy of engines, best ... 420
compared with turbines ... 186, 417–420
with varying superheat, vacuum, and pressure ... 186, 420
Economy of small engines and turbines ... 421
Economy of turbines at standard conditions ... 419
Efficiency of blades ... 103
ratio ... 124, 400
of steam engines, mechanical ... 418
of steam nozzles ... 58, 104
thermal unit basis of ... 402
of turbines ... 103, 400, 401, 402
of turbine-generators ... 527
Electric generators for steam turbines ... 523
Emergency speed limit valve ... 243, 266
End thrust ... 121, 140, 160, 222
Entropy ... 17
of saturated steam ... 18–23
of superheated steam ... 19, 26–31
of water ... 19–20
temperature diagrams ... 17–32
total heat chart ... 43, 45, 47, 105, Appendix
Equalizing pipe in Parsons turbine ... 148, 223
Erosion of blades ... 174
Experiments with nozzles ... 49–60
on flow of superheated steam ... 39–41
with governors ... 337
Extraction turbines ... 369–378
Extruded metal for blades ... 172
Flash-over limit of turbine-generators ... 525
Floor area for engines and turbines ... 430–436

PAGES

Flow of steam:
experiments on ... 36–42
saturated ... 36–39
superheated ... 39–41
weight of steam flowing ... 36–41
Gas turbines ... 506–522
compared with gas engines ... 515
Gauging of Parsons blades ... 119, 130, 138
Generators, efficiency of ... 378, 527
Glands, water packed ... 150, 224
Governing of turbines, methods of ... 302
by-pass ... 332
cutting out nozzles ... 305
experimental data ... 337
pneumatic ... 332
throttling ... 302
varying time of admission ... 313, 320
Governors, turbine:
Allis-Chalmers ... 322
Brown-Boveri ... 320, 333
Curtis ... 307–320
De Laval ... 304, 329
Ridgway ... 332
Westinghouse ... 326
Wilkinson ... 330
Gyroscopic action ... 207
Heat diagram, entropy ... Appendix
applied to design ... 105
Heat theory ... 10–28
Heat units ... 12
Heat, mechanical equivalent of ... 13
specific ... 12, 13, 26–29
Hero's turbine ... 4, 8
High-pressure turbine casings ... 158
Horse-power, internal or indicated ... 402
conversion for kilowatts to brake ... 111, 420
Impulse turbines ... 64, 69, 200
and reaction, combined (Westinghouse) ... 239
blade design ... 99–174
blade efficiency ... 77, 103
blade losses ... 102–104
comparison with reaction turbines ... 169
distinguished from reaction ... 62–66
shape of blades ... 64, 66, 173, 288
Ingersoll-Rand turbine ... 279
Initial velocity of steam ... 16, 103

Injection water (*see* Condensing water) PAGES
Intermediate (stationary) blades ... 71, 261
Jets, impulse and reaction of ... 62–64
Kerr turbine ... 291, 488
  governor ... 293
Kilogram-calories in British thermal units ... 12
Kilowatts, conversion of, to brake horse-power ... 111, 420
Knoblauch and Jakob's specific heat of superheated steam ... 27–29
Labyrinth packing ... 143, 222–233, 285
Lasche's method for rotation losses ... 182
Leakage of steam through blades ... 135, 139, 163, 185
  through diaphragms ... 103, 185, 284
  through dummy rings ... 131, 160
Ljungstrom turbine ... 282–284, 395
Losses in a turbine ... 103, 110, 175, 218
Low-pressure turbines ... 339–355, 363
  accumulators for ... 355–362
  combined with gas engines ... 364
  combined with steam engines ... 343–355, 363
  steam consumption of ... 344, 362
Lubrication of turbines ... 326, 436, 440
  cost of oil required ... 423
  of Westinghouse turbines ... 326, 440
Maintenance and operation of turbines ... 423
Marine turbines ... 119, 342, 379
  designing constants ... 119
  working with reciprocating engines ... 340
Materials and permissible stresses in turbine disks ... 485
Mechanical equivalent of heat ... 13
  losses in turbines ... 175
Mercury turbine ... 495–505
Mixed pressure turbines ... 365–368
Moisture correction for rotation losses ... 178
Moisture correction for steam consumption (water-rate) ... 38, 195
Moore turbine ... 279, 281
Motion, absolute and relative ... 76
Non-expanding nozzles ... 57, 60, 239 (footnote)
Nozzles:
  area of ... 36–45
  design of ... 36–59, 112
  efficiency ... 34, 57–59
  examples of ... 33, 34, 60
  expansion ratio ... 44–50, 58
  flow of steam through ... 36–60
  length of ... 55
  non-expanding ... 57, 60, 239, 276

Nozzles: PAGES
types of ... 3, 33, 34, 60, 276
losses in ... 57–58
Oil pump, Westinghouse ... 326, 440
Oiling systems ... 326, 436, 440
Over- and under-expansion in nozzles ... 57–58
Packing glands ... 151–160, 215, 224, 284
Parsons turbines ... 6–9, 219–238
bearings ... 8, 230
blades and lashing ... 224–230
design of ... 113–169
governors and valve gears ... 321
history of ... 6–9
number of stages ... 116, 231
pressure diagram (indicator) ... 323
shroud rings ... 225
speeds of ... 116
steam consumption of ... 193, 196, 236, 396, 400
superheat corrections ... 193, 238
vacuum corrections ... 193, 238, 411
Pelton types of turbines ... 287
Performance, thermal unit basis of ... 402
of engines and turbines ... 186, 342, 419–422
Piping of turbine stations ... 437–441
for superheated steam ... 440
Pneumatic governor ... 332
Power plant economics ... 404–442
Pressure (initial steam) effect on economy ... 421
corrections for economy curves ... 186–196
in throat of nozzles ... 36, 38
stages ... 72
Pressure-volume diagrams ... 15–17
Prices of turbines and auxiliaries ... 424–427
Quality of steam ... 38, 44
Radial blade leakage ... 135, 139, 171, 185
Rankine cycle efficiency ... 31, 111, 400
Rateau accumulator ... 355–362
Rateau turbines ... 275
diaphragms ... 276
low pressure ... 280
tests on ... 398
Reaction of jets ... 62–64
Reaction turbine ... 75
blade design ... 113–140, 161–168, 544–547
blade efficiency ... 86
blade losses ... 102

Reaction turbine — *Continued* PAGES
blade speeds ... 115, 116, 129
distinguished from impulse ... 65
Regenerative turbine ... 369, 375
Reheating factor ... 104, 127 (footnote)
Relative velocity ... 76
Ridgway turbine ... 279
governor ... 332
Riedler-Stumpf turbines ... 287
Rings, stresses in ... 443
Rotation losses ... 85 (footnote), 175
factors to correct for superheat and moisture ... 178
Rotors, stresses in ... 447, 485
Sankey's blading ... 227
Screw turbine ... 9
Shroud rings ... 225, 261
stresses in ... 443
Space occupied by engines and turbines ... 430
Sparking limit of generators ... 523
Specific heat ... 12
of superheated steam ... 13, 26
Specific volume of superheated steam ... 40, 126
Speed of turbines, effect on economy and output ... 198, 416
Stage leakage ... 103, 110, 185
Stages of turbines ... 72–75
leakage between ... 85 (footnote), 103, 185, 284
Steam glands for shaft packing ... 150, 154
Steam turbine economics ... 404–436
Steam turbines:
compared with steam engines ... 1, 13–17, 186
cost of ... 424–426
Step-bearing of Curtis turbines ... 263
Stodola's experiments with nozzles ... 56
Stresses in rotating rings, drums, and disks ... 443
at right angles ... 450
Sturtevant turbine ... 287
buckets ... 288
nozzles ... 288
velocity stages ... 290
Superheated steam corrections for economy curves ... 189, 238, 420
effect on economy ... 413
flow through nozzles ... 39, 40
specific heat of ... 13, 26
specific volume of ... 40, 126
Supersaturated steam ... 39 (footnote), 40
Taper of De Laval nozzles ... 55

PAGES

Temperature-entropy diagrams 17–32
Temperature 10–11
absolute 11
Terry turbine 294
Tests on turbines 193, 198, 363, 389
Thermal units, definition of 12
basis of performance 402
Thermodynamic efficiency 402
Thermometer correction 11
Thrust, end, in Parsons turbine 121, 160, 222
Torque line 198
Total heat of steam 21–23
of superheated steam 29–32
Types of steam turbines 64, 200
Under expansion in nozzles 57–58
Vacuum, condensing water required for 407, 412
corrections for economy curves 186, 238, 410
effect on engine and turbine economy 420
most profitable 406
Vanes (*see* Blades).
Velocity, absolute 76
diagrams 70–76
relative 76
Velocity of blades 104, 128, 137, 204
Velocity of steam:
calculation of 24
stages 71, 84, 239
Volume, specific:
at high vacuums 340, 342, 409
of superheated steam 40, 126
Water-packed glands 151, 224
Water-rate of turbines 31, 390
Westinghouse oil pump 326, 440
Westinghouse impulse turbines 271
Westinghouse impulse and reaction turbines 239, 274
adjustment bearing 241
advantages of (double-flow type) 247
blades of impulse section 239
emergency speed limit 243
nozzles and nozzle block 243
reduction gear 382
velocity stages 239
Westinghouse-Parsons turbines 231, 252
bearings 230
blades and lashing 225
governor and valve gear 321, 326

Westinghouse-Parsons turbines — *Continued* PAGES
tests on 193, 195, 237, 394, 400
water-packed glands 224
Wilkinson turbines 284
governor and valve gear 330
stage packing 284
Willans lines 184
Wing blades 123, 133
Zoelly turbines 285
blades 285
governor 337
nozzles 285
tests on 398